Draft for Public Comment

Form 36

DPC: 17 / 30360898 DC

BSI Group Headquarters

389 Chiswick High Road London W4 4AL

Tel: +44 (0)20 8996 9000
Fax: +44 (0)20 8996 7400
www.bsigroup.com

Date: 09 May 2017
Origin: European

Latest date for receipt of comments: 5 July 2017 Responsible committee: Project No. 2009/01617

ACE/6 Aerospace avionic electrical and fibre optic technology

Interested committees:

Title:	Draft BS EN 3660-064 Aerospace series — Cable outlet accessories for circular and rectangular electrical and optical connectors — Part 064: Cable outlet, style K, straight, for heat shrinkable boot, shielded, sealed, self-locking — Product standard

Please notify the secretary if you are aware of any keywords that might assist in classifying or identifying the standard or if the content of this standard
i) has any issues related to 3rd party IPR, patent or copyright
ii) affects other national standard(s)
iii) requires additional national guidance or information

WARNING: THIS IS A DRAFT AND MUST NOT BE REGARDED OR USED AS A BRITISH STANDARD.
THIS DRAFT IS NOT CURRENT BEYOND 5 July 2017

This draft is issued to allow comments from interested parties; all comments will be given consideration prior to publication. No acknowledgement will normally be sent. **See overleaf for information on the submission of comments.**

No copying is allowed, in any form, without prior written permission from BSI except as permitted under the Copyright, Designs and Patent Act 1988 or for circulation within a nominating organization for briefing purposes. Electronic circulation is limited to dissemination by e-mail within such an organization by committee members.

Further copies of this draft may be purchased from BSI Shop **http://shop.bsigroup.com**
or from BSI Customer Services, Tel: +44(0) 20 8996 9001 or email cservices@bsigroup.com.
British, International and foreign standards are also available from BSI Customer Services.

Information on the co-operating organizations represented on the committees referenced above may be obtained from
http://standardsdevelopment.bsigroup.com

Responsible Committee Secretary: **Committee Service Centre (BSI)**
Direct tel: **020 8996 7009**
E-mail: **csc@bsigroup.com**

Documents
Document Sharing Hub

Full document details: 17/30360898 DC

Introduction

This draft standard is based on European discussions in which the UK has taken an active part. Your comments on this draft are welcome and will assist in the preparation of the consequent British Standard. Comment is particularly welcome on national, legislative or similar deviations that may be necessary.

Even if this draft standard is not approved by the UK, if it receives the necessary support in Europe, the UK will be obliged to publish the official English Language text unchanged as a British Standard and to withdraw any conflicting standard.

UK Vote

Please indicate whether you consider the UK should submit a negative (with reasons) or positive vote on this draft.

Submission of Comments

- The guidance given below is intended to ensure that all comments receive efficient and appropriate attention by the responsible BSI committee. **Annotated drafts are not acceptable and will be rejected.**

- All comments must be submitted, preferably electronically, to the Responsible Committee Secretary at the address given on the front cover. Comments should be compatible with version 6.0 or version 97 of Microsoft Word for Windows, if possible; otherwise comments in ASCII text format are acceptable. **Any comments not submitted electronically should still adhere to these format requirements.**

- All comments submitted should be presented as given in the example below. Further information on submitting comments and how to obtain a blank electronic version of a comment form are available from the BSI website at: **http://drafts.bsigroup.com/**

Template for comments and secretariat observations

Date: xx/xx/20xx	Document: **ISO/DIS xxxx**

1	2	(3)	4	5	(6)	(7)
MB	**Clause No./ Subclause No./Annex** (e.g. 3.1)	**Paragraph/ Figure/ Table/Note**	**Type of com-ment**	**Commend (justification for change) by the MB**	**Proposed change by the MB**	**Secretariat observations on each comment submitted**
	3.1	Definition 1	ed	Definition is ambiguous and needs clarifying.	Amend to read '...so that the mains connector to which no connection...'	
	6.4	Paragraph 2	te	The use of the UV photometer as an alternative cannot be supported as serious problems have been encountered in its use in the UK.	Delete reference to UV photometer.	

EXAMPLE ONLY

Documents
Document Sharing Hub

Microsoft and MS-DOS are registered trademarks, and Windows is a trademark of Microsoft Corporation.

Full document details: 17/30360898 DC

ASD/TC

Date: 02-2017

ISSUE 3

prEN 3660-064:2017

ASD/TC

Secretariat: ASD

Aerospace series — Cable outlet accessories for circular and rectangular electrical and optical connectors — Part 064: Cable outlet, style K, straight, for heat shrinkable boot, shielded, sealed, self-locking for EN 2997 and EN 4067 — Product standard.

Comment [LC1]: Reference to connector standards removed as they are referenced in -002.

Luft- und Raumfahrt — Endgehäuse für elektrische und optische Rund- und Rechtecksteckverbinder — Teil 064: Endgehäuse, Bauform K, gerade, für wärmeschrumpfende Bauteile, Schirmanschluß, abgedichtet, selbstsichernd für EN 2997 und EN 4067 — Produktnorm

Série aérospatiale — Accessoires arrière pour connecteurs circulaires et rectangulaires électriques et optiques — Partie 064 : Raccord type K, droit, blindé, étanche, pour manchon thermorétractable, auto-freiné pour EN 2997 et EN 4067 — Norme de produit

ICS: 49.060

Descriptors: Aerospace industry, aerospace equipment, element of electrical connection, electrical contact, characteristics, test, quality assurance, marking

Document type: European Standard
Document subtype:
Document stage: Formal Vote
Document language: E

Documents
Document Sharing Hub

Full document details: 17/30360898 DC

Documents
Document Sharing Hub

Contents

Page

Foreword **2**
1 Scope **3**
2 Normative references **3**
3 Terms and definitions **3**
4 Characteristics **5**
5 Tests **13**
6 Identification **19**
7 Marking **20**
8 Technical specification **20**

Documents
Document Sharing Hub

Full document details: 17/30360898 DC

Foreword

This document (EN 3660-064:2012) has been prepared by the Aerospace and Defence Industries Association of Europe - Standardization (ASD-STAN).

After enquiries and votes carried out in accordance with the rules of this Association, this Standard has received the approval of the National Associations and the Official Services of the member countries of ASD, prior to its presentation to CEN.

This document is currently submitted to the Formal Vote.

Documents
Document Sharing Hub

Full document details: 17/30360898 DC

1.Scope

This product standard defines a range of cable outlets, style K, straight, shielded, sealed, self locking (anti-rotational) for heat shrinkable boot, and / or metallic band under the following conditions:

The mating connectors are listed in EN 3660-002.

Temperature range,	Class N	:	– 65 °C to 200 °C
	Class K	:	– 65 °C to 260 °C
	Class W	:	– 65 °C to 175 °C
	Class T	:	– 65 °C to 175 °C (Nickel PTFE Plating)
	Class Z	:	– 65 °C to 175 °C (Black Zinc Nickel Plating).

Associated electrical accessories :EN 3660-033 Metallic band (for shield termination).

These cable outlets are designed for termination of overall shielding braid and / or individual cable shields. They accommodate/permit the termination of heat shrinkable boots.

2. Normative references

The following referenced documents are indispensable for the application of this document. For dated references, only the edition cited applies. For undated references, the latest edition of the referenced document (including any amendments) applies.

EN 2591-100*, *Aerospace series — Elements of electrical and optical connection — Test methods — Part 100: General.*

EN 2997 (series), *Aerospace series — Connectors, electrical, circular, coupled by threaded ring, fire-resistant or non fire-resistant, operating temperatures – 65 °C to 175 °C continuous, 200 °C continuous, 260 °C peak.*

EN 3660-001, *Aerospace series — Cable outlet accessories for circular and rectangular electrical and optical connectors — Part 001: Technical specification.*

EN 3660-002, *Aerospace series — Cable outlet accessories for circular and rectangular electrical and optical connectors — Part 002: Index of product standards.*

EN 3660-033, *Aerospace series — Cable outlet accessories for circular and rectangular electrical and optical connectors — Part 033: Metallic band — Product standard.* 1)

AS85049, *Connector accessories, electrical general specification for-.* 2)

Comment [LC2]: Reference to Revision "A" removed.

DIN 82, *Knurling.*

A-A-59569 Braid Specification

3. Terms and definitions

For the purposes of this document, the terms and definitions given in EN 3660-001 apply.

---

* All its parts quoted in this standard.

1) In preparation at the date of publication of this standard.

2) Published by: Society of Automotive Engineers, Inc. (SAE), 400 Commonwealth Drive, Warrendale, PA 15096-0001.

Documents
Document Sharing Hub

Full document details: 17/30360898 DC

(Self locking / Anti Rotational definition) A self locking or anti rotational mechanism provides a nut rotation with moderate torque in the mated direction and provides a greater torque in the unmated direction.

4. Characteristics

4.1 Dimensions and mass

For dimensions and mass, see Figures 1 to 6 and Tables 1 to 7.
For cable entry dimensions, see 4.2.

Comment [LC3]: References to all figures and tables included.

All dimensions are in millimetres

Figure 1

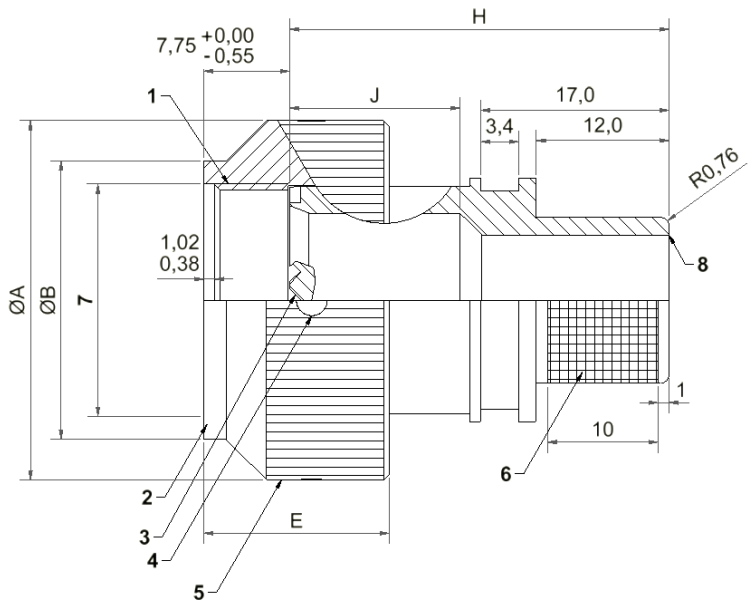

1. Thread C.
2. Marking.
3. Number of teeth N.
4. 4 Tooling holes spaced 90°apart. Ø2,60, depth ,1,27.
5. Straight knurl. Pitch manufacturer's option.
6. RKV 08 DIN 82. Figure 2. (Please note there may be crossover dependent on diameter and pitch).
7. Clearance on thread C
8. Break edge
9. Cable Outlets may be manufactured as cast, fabricated or machined (manufactures option)
10. No sharp edges / burrs permissible on internal or external surfaces / joints. Surface finish of ∇ 1,6µm max on all internal surfaces

Documents
Document Sharing Hub
Full document details: 17/30360898 DC