Draft for Public Comment

Form 36

DPC: 20/30419927 DC

BSI Group Headquarters

389 Chiswick High Road London W4 4AL

Tel: +44 (0)20 8996 9000
Fax: +44 (0)20 8996 7400
www.bsigroup.com

Date: 06 May 2020
Origin: International

Latest date for receipt of comments: 17 June 2020

Project No. 2019/02613

Responsible committee: CH/62/4 Electromedical equipment

Interested committees:

Title: Draft BS EN IEC 80601-2-89 Medical electrical equipment. Part 2-89: Particular requirements for the basic safety and essential performance of medical beds for children.

Please notify the secretary if you are aware of any keywords that might assist in classifying or identifying the standard or if the content of this standard

i) has any issues related to 3rd party IPR, patent or copyright
ii) affects other national standard(s)
iii) requires additional national guidance or information

WARNING: THIS IS A DRAFT AND MUST NOT BE REGARDED OR USED AS A BRITISH STANDARD. THIS DRAFT IS NOT CURRENT BEYOND 17 June 2020

This draft is issued to allow comments from interested parties; all comments will be given consideration prior to publication. No acknowledgement will normally be sent. **See overleaf for information on the submission of comments.**

No copying is allowed, in any form, without prior written permission from BSI except as permitted under the Copyright, Designs and Patent Act 1988 or for circulation within a nominating organization for briefing purposes. Electronic circulation is limited to dissemination by e-mail within such an organization by committee members.

Further copies of this draft may be purchased from BSI Shop http://shop.bsigroup.com or from BSI Customer Services, Tel: +44(0) 20 8996 9001 or email cservices@bsigroup.com. British, International and foreign standards are also available from BSI Customer Services.

Information on the co-operating organizations represented on the committees referenced above may be obtained from https://standardsdevelopment.bsigroup.com/.

Responsible Committee Secretary: Miss Jacinta Hampton (BSI)
Direct tel:
E-mail: jacinta.hampton@bsigroup.com

AVA Documents
Document Sharing Hub
Full document details: 20/30419927 DC

Introduction

This draft standard is based on national and international discussions. Your comments on this draft are invited and will assist in the preparation of the consequent standard.

For international standards, comments will be reviewed by the relevant UK national committee before sending the consensus UK vote and comments to the international committee, which will then decide appropriate action. If the international standard is approved, it is usual for the text to be published as a British Standard.

For national standards, comments will be reviewed by the relevant UK national committee and the resulting standards published as a British Standard.

UK Vote

Please indicate whether you consider the UK should submit a negative (with supporting technical reasons) or positive vote on this draft. Please indicate if you are aware of any reason why this draft standard should not be published as a British Standard.

Submission of Comments

- **Annotated drafts are not acceptable and will be rejected.**
- All comments should be submitted online at **https://standardsdevelopment.bsigroup.com/**. You will need to register in order to comment.

Template for comments and secretariat observations

Date: xx/xx/20xx	Document: ISO/DIS xxxx

1	2	(3)	4	5	(6)	7
MB	Clause No./ Subclause No./Annex **(e.g. 3.1)**	Paragraph/Figure/ Table/Note	**Type of comment**	**Commend (justification for change) by the MB**	**Proposed change by the MB**	**Secretariat observations on each comment submitted**
	3.1	Definition 1	ed	Definition is ambiguous and needs clarifying.	Amend to read '...so that the mains connector to which no connection...'	
	6.4	Paragraph 2	te	The use of the UV photometer as an alternative cannot be supported as serious problems have been encountered in its use in the UK.	Delete reference to UV photometer.	

Documents
Document Sharing Hub

Full document details: 20/30419927 DC

62D/1758A/CD

COMMITTEE DRAFT (CD)

PROJECT NUMBER: **IEC 80601-2-89 ED1**	
DATE OF CIRCULATION: **2020-05-01**	CLOSING DATE FOR COMMENTS: **2020-07-17***
SUPERSEDES DOCUMENTS: **62D/1635/NP, 62D/1702A/RVN**	

IEC SC 62D : ELECTROMEDICAL EQUIPMENT	
SECRETARIAT: United States of America	SECRETARY: Ms Hae Choe
OF INTEREST TO THE FOLLOWING COMMITTEES:	PROPOSED HORIZONTAL STANDARD: ☐ Other TC/SCs are requested to indicate their interest, if any, in this CD to the secretary.

FUNCTIONS CONCERNED:

☐ EMC ☐ ENVIRONMENT ☐ QUALITY ASSURANCE ☒ SAFETY

This document is still under study and subject to change. It should not be used for reference purposes.

Recipients of this document are invited to submit, with their comments, notification of any relevant patent rights of which they are aware and to provide supporting documentation.

TITLE:

Medical electrical equipment - Part 2-89: Particular requirements for the basic safety and essential performance of medical beds for children

NOTE FROM TC/SC OFFICERS:

This is a joint project with ISO/TC 173.

*Due to COVID-19 pandemic, the IEC/SC 62D – ISO/TC 173/JWG 4 meeting has been postponed. In light of the current situation, extension of the commenting deadline is being set to give National Committee members a bit more time to look over this proposed draft.

Copyright © 2020 International Electrotechnical Commission, IEC. All rights reserved. It is permitted to download this electronic file, to make a copy and to print out the content for the sole purpose of preparing National Committee positions. You may not copy or "mirror" the file or printed version of the document, or any part of it, for any other purpose without permission in writing from IEC.

Documents
Document Sharing Hub

Full document details: 20/30419927 DC

prEN/TS/TR Reference Number (if available) :	IEC 80601-2-89 ED 1
Database Work Item Number :	25367
English Title :	Medical electrical equipment — Part 2-89 Particular requirements for the basic safety and essential performance of medical beds for children
French Title (if available):	Appareils électromédicaux - Exigences particulières de sécurité de base et de performances essentielles des lits médicaux pour enfants
German Title (if available):	Medizinische elektrische Geräte - Besondere Festlegungen für die Sicherheit einschließlich der wesentlichen Leistungsmerkmale von medizinischen Betten für Kinder

Documents
Document Sharing Hub
Full document details: 20/30419927 DC

Contents

Page

Introduction 8
201.1 Scope, object and related standards 9
201.1.1 * Scope 10
201.1.2 Object 10
201.1.3 Collateral standards 10
201.1.4 Particular standards 11
201.2 Normative references 11
201.3 Terms and definitions 12
201.4 General requirements 17
201.4.2 *Risk management process for ME EQUIPMENT and ME SYSTEM 17
201.5 General requirements for testing of ME EQUIPMENT 17
201.5.101 * Entrapment test TOOLS 18
201.5.102 Loading pad 20
201.5.103 Impactor 21
201.5.104 Side impactor 22
201.6 Classification of ME EQUIPMENT and ME SYSTEMS 23
201.6.2 *Protection against electrical shock 23
201.7 ME EQUIPMENT identification, marking and documents 23
201.8 Protection against electrical HAZARDS from ME EQUIPMENT 32
201.9 Protection against MECHANICAL HAZARDS of ME EQUIPMENT and ME SYSTEMS 32
201.9.1 *Mechanical HAZARDS of ME EQUIPMENT 33
201.9.2 HAZARDS associated with moving parts 40
201.9.3 HAZARDS associated with surfaces, corners and edges 44
201.9.8 HAZARDS associated with support systems 49
201.9.101 *Protection against inadvertent PATIENT falls 58
201.10 Protection against unwanted and excessive radiation HAZARDS 60
201.11 Protection against excessive temperatures and other HAZARDS 60
201.11.7 Biocompatibility of MEDICAL BED 63
201.11.8 *Interruption of the power supply/SUPPLY MAINS to ME EQUIPMENT 63
201.12 Accuracy of controls and instruments and protection against hazardous outputs 63
201.12.2 USABILITY 63
201.13 HAZARDOUS SITUATIONS and fault conditions 63
201.14 Programmable electrical medical systems (PEMS) 64
201.15 Construction of ME EQUIPMENT 64
201.15.3 Mechanical strength 64
201.15.4 ME EQUIPMENT components and general assembly 65
201.16 ME SYSTEMS 67
201.17 Electromagnetic compatibility of ME EQUIPMENT and ME SYSTEMS 67

Annex AA (normative) Particular guidance and rationale 68
AA.1 General guidance 68
AA.1.1 Rationale for particular clauses and subclauses 68

Annex BB (normative) Design requirements and recommendations for MEDICAL BED 82
BB.1 General 82
BB.2 Human factors (ergonomic) 82
BB.2.1 General 82
BB.2.2 Range of adjustment of the height of the mattress support platform 82
BB.2.3 Dimensions for handles and pedals 83
BB.2.4 Operating forces for handles and pedals 83
BB.3 Functionality 83
BB.3.1 General 83
BB.3.2 Combination of MEDICAL BED and MOBILE hoists 83
BB.3.3 Combination of MEDICAL BED and mattress 84
BB.3.4 Range of adjustment of moveable sections of the MATTRESS SUPPORT PLATFORM 84

AVA Documents
Document Sharing Hub

Full document details: 20/30419927 DC

55 **Annex CC** (informative) **Particular guidance for assessing risk of entrapment in v-shaped**
56 **openings** **86**
57 **Bibliography** **92**
58
59 FIGURE 201.101 – MEDICAL BED, GENERAL ARRANGEMENT (EXAMPLE, SCHEMATIC PRESENTATION ONLY) 16
60 FIGURE 201.102A – CONE TOOL 18
61 FIGURE 201.102B – FINGER PROBE FOR MESH 18
62 FIGURE 201.102C – CYLINDER TOOL 19
63 FIGURE 201.102D – BALL CHAIN 19
64 FIGURE 201.102E – BALL CHAIN LOOP AND SPHERICAL MASS 19
65 FIGURE 201.102 – ENTRAPMENT TEST TOOLS 19
66 FIGURE 201.103– LOADING PAD 20
67 FIGURE 201.104 – IMPACTOR 21
68 FIGURE 201.105 - SIDE IMPACTOR 22
69 FIGURE 201.106 – GRAPHICAL SYMBOL FOR MAXIMUM PATIENT WEIGHT AND SAFE WORKING LOAD 24
70 FIGURE 201.107 – MARKING FOR COMPATIBLE MATTRESSES SPECIFIED BY THE MANUFACTURER 25
71 FIGURE 201.108 – MARKING FOR DETACHABLE SIDE RAILS SPECIFIED BY THE MANUFACTURER 25
72 FIGURE 201.109 DESCRIPTION OF ALLOWED LENGTH OF PATIENT 26
73 FIGURE 201.110 EXAMPLE OF MARKING ON THE MEDICAL BED FOR POSITIONING PATIENT IN MEDICAL BED 27
74 FIGURE 201.111 – MEDICAL BED FUNCTION CONTROLS AND/OR ACTUATORS: GUIDELINES FOR CREATING GRAPHICAL
75 SYMBOLS 29
76 FIGURE 201.112 MARKING ON THE MEDICAL BED OF STORAGE LOCATION FOR PENDANT CONTROL 30
77 FIGURE 201.113 – EXAMPLE OF MEDICAL BED WITH SEGMENTED OR SPLIT SIDE RAIL 34
78 FIGURE 201.114 – EXAMPLE OF MEDICAL BED WITH SINGLE PIECE SIDE RAIL AND PROTECTION SIDE RAIL 35
79 FIGURE 201.115 - DIMENSION OF HANDLE FOR LIFTING POLE. 39
80 FIGURE 201.116 – ALLOWABLE SPACING FOR FINGERS IN AREAS OF NORMAL REACH AROUND THE PERIMETER OF THE
81 MATTRESS SUPPORT PLATFORM 41
82 FIGURE 201.117 – EXAMPLE USING BARRIERS FOR CLEARANCE MEASUREMENT AROUND THE PERIMETER OF THE
83 MATTRESS SUPPORT PLATFORM TO MITIGATE PATIENT-FINGER ENTRAPMENT 42
84 FIGURE 201.118A – FOOT AND TOE CLEARANCE AREA BETWEEN MOVING PARTS AND THE FLOOR 42
85 FIGURE 201.118B) – TOE CLEARANCE AREA BETWEEN MOVING PARTS AND THE FLOOR 43
86 FIGURE 201.118 – CLEARANCE AREAS 43
87 FIGURE 201.119 - REQUIRED MINIMUM RADII OF EDGES AND CORNERS 44
88 FIGURE 201.120 — RETENTION OF LOOP AND MASS 45
89 FIGURE 201.121 – LATERAL STABILITY TEST ALONG THE SIDE OF THE MEDICAL BED 46
90 FIGURE 201.122 – LONGITUDINAL STABILITY TEST WITH REMOVABLE FOOT BOARD 47
91 FIGURE 201.123 – LONGITUDINAL STABILITY TEST WITH FIXED HEAD/FOOT BOARDS 47
92 FIGURE 201.124 – DISTRIBUTION OF SAFE WORKING LOAD FOR TESTS 51
93 FIGURE 201.125 – POSITION OF LOADING PAD AND IMPACTOR 53
94 FIGURE 201.126 - IMPACT TO SLATS AND SOLID ELEMENTS OF MEDICAL BEDS 55
95 FIGURE 201.127 – APPLICATION OF FORCES FOR TEST OF SIDE RAIL 57
96 FIGURE 201.128 – HEIGHT OF SIDE RAIL / PROTECTION SIDE RAIL 59
97 FIGURE 201.129A – ANGLE γ BETWEEN THE BACK SECTION AND THE LEG SECTION OF THE MATTRESS SUPPORT
98 PLATFORM 65
99 FIGURE 201.129B – ANGLE γ BETWEEN THE BACK SECTION AND THE UPPER LEG SECTION OF THE MATTRESS SUPPORT
100 PLATFORM 65
101 FIGURE 201.129C – ANGLE γ BETWEEN THE ANGLED BACK SECTION AND UPPER LEG SECTION OF THE MATTRESS
102 SUPPORT PLATFORM 66
103 FIGURE 201.129D – ANGLE γ BETWEEN THE ANGLED BACK SECTION AND THE LEG/UPPER LEG SECTION OF THE
104 MATTRESS SUPPORT PLATFORM 66
105 FIGURE 201.129 – CONFIGURATIONS OF THE MATTRESS SUPPORT PLATFORM 66
106 FIGURE AA.1 – RESULTANT FORCES WITHOUT MATTRESS 72
107 FIGURE AA.2 – RESULTANT FORCES WITH MATTRESS 72
108 FIGURE AA.3 – EXAMPLE OF 40 MM GAP MEASUREMENT OF B 72
109 FIGURE AA.4 – ANGLE MEASUREMENT EXAMPLE OF B 72

Documents
Document Sharing Hub
Full document details: 20/30419927 DC

FIGURE AA.5 – PLACEMENT OF MEASUREMENT TOOL FOR MEASUREMENT OF D_X 73
FIGURE AA.6 – EXAMPLE OF AREA D_X MEASUREMENT THAT PASSES 74
FIGURE AA.7 – EXAMPLE OF AREA D_X MEASUREMENT THAT FAILS 74
FIGURE AA.8 – EXAMPLE OF AREA D_X MEASUREMENT THAT FAILS (ON LIMIT) 74
FIGURE AA.9 – EXAMPLE OF POTENTIAL PATIENT ENTRAPMENT IN AREA A WITHIN THE SIDE RAIL 75
FIGURE AA.10 – EXAMPLE OF POTENTIAL PATIENT ENTRAPMENT IN AREA A BELOW THE SIDE RAIL 75
FIGURE AA.11 – EXAMPLE OF POTENTIAL PATIENT ENTRAPMENT IN AREA B 75
FIGURE AA.12 – EXAMPLE OF POTENTIAL PATIENT ENTRAPMENT IN AREA C BETWEEN SPLIT SIDE RAIL 75
FIGURE AA.13 – EXAMPLE OF POTENTIAL PATIENT ENTRAPMENT IN AREA C BETWEEN SIDE RAIL AND HEAD BOARD 75
FIGURE AA.14 – EXAMPLE OF POTENTIAL PATIENT ENTRAPMENT IN AREA D_X 75
FIGURE AA.15 – EXAMPLE OF POTENTIAL PATIENT ENTRAPMENT IN AREA A BELOW A SINGLE PIECE SIDE RAIL 76
FIGURE BB.1 – SCHEMATIC PRESENTATION OF UNDER MEDICAL BED CLEARANCE 84
FIGURE BB.2 – RECOMMENDATIONS AND REQUIREMENTS REGARDING ANGLES FOR DIFFERENT SECTIONS OF THE MATTRESS SUPPORT PLATFORM 85
FIGURE CC.1 – WEDGE TOOL 87
FIGURE CC.2 – V-SHAPED OPENING IN RELATION TO B 88
FIGURE CC.3 – PASS/FAIL IN RELATION TO AREA B 88
FIGURE CC.4 – POSITIONING OF WEDGE TOOL 89
FIGURE CC.5 – PASS/FAIL IN RELATION TO AREA C BETWEEN HEAD BOARD AND FOOT BOARD 90
FIGURE CC.6 – PASS/FAIL IN RELATION TO AREA C BETWEEN SPLIT SIDE RAILS 91

*TABLE 201.101 – PROTECTION AGAINST PATIENT ENTRAPMENT 36
TABLE 201.102 – PROTECTION AGAINST INADVERTENT PATIENT FALLS AND CLIMBING OUT OF MEDICAL BED 60
TABLE 24 – ALLOWABLE MAXIMUM TEMPERATURES FOR SKIN CONTACT WITH MEDICAL BED APPLIED PARTS 61
TABLE AA.1 – PROTECTION AGAINST PATIENT ENTRAPMENT IN NON-MOVING PARTS 71
TABLE AA.2 – HEIGHT OF PROTECTIVE BARRIER ACCORDING TO AGE 80

Documents
Document Sharing Hub
Full document details: 20/30419927 DC

INTERNATIONAL ELECTROTECHNICAL COMMISSION

MEDICAL ELECTRICAL EQUIPMENT –

Part 2-89: Particular requirements for the basic safety and essential performance of medical beds for children

FOREWORD

1) The International Electrotechnical Commission (IEC) is a worldwide organization for standardization comprising all national electrotechnical committees (IEC National Committees). The object of IEC is to promote international co-operation on all questions concerning standardization in the electrical and electronic fields. To this end and in addition to other activities, IEC publishes International Standards, Technical Specifications, Technical Reports, Publicly Available Specifications (PAS) and Guides (hereafter referred to as "IEC Publication(s)"). Their preparation is entrusted to technical committees; any IEC National Committee interested in the subject dealt with may participate in this preparatory work. International, governmental and non-governmental organizations liaising with the IEC also participate in this preparation. IEC collaborates closely with the International Organization for Standardization (ISO) in accordance with conditions determined by agreement between the two organizations.

2) The formal decisions or agreements of IEC on technical matters express, as nearly as possible, an international consensus of opinion on the relevant subjects since each technical committee has representation from all interested IEC National Committees.

3) IEC Publications have the form of recommendations for international use and are accepted by IEC National Committees in that sense. While all reasonable efforts are made to ensure that the technical content of IEC Publications is accurate, IEC cannot be held responsible for the way in which they are used or for any misinterpretation by any end user.

4) In order to promote international uniformity, IEC National Committees undertake to apply IEC Publications transparently to the maximum extent possible in their national and regional publications. Any divergence between any IEC Publication and the corresponding national or regional publication shall be clearly indicated in the latter.

5) IEC itself does not provide any attestation of conformity. Independent certification bodies provide conformity assessment services and, in some areas, access to IEC marks of conformity. IEC is not responsible for any services carried out by independent certification bodies.

6) All users should ensure that they have the latest edition of this publication.

7) No liability shall attach to IEC or its directors, employees, servants or agents including individual experts and members of its technical committees and IEC National Committees for any personal injury, property damage or other damage of any nature whatsoever, whether direct or indirect, or for costs (including legal fees) and expenses arising out of the publication, use of, or reliance upon, this IEC Publication or any other IEC Publications.

8) Attention is drawn to the Normative references cited in this publication. Use of the referenced publications is indispensable for the correct application of this publication.

9) Attention is drawn to the possibility that some of the elements of this IEC Publication may be the subject of patent rights. IEC shall not be held responsible for identifying any or all such patent rights.

International standard IEC 80601-2-89 has been prepared by IEC subcommittee 62D: Electromedical equipment, of IEC technical committee 62: Electrical equipment in medical practice, and by ISO technical committee 173: Assistive products for persons with disability.

It is published as double logo standard.

This publication has been drafted in accordance with the ISO/IEC Directives, Part 2.

In this standard, the following print types are used:

– Requirements and definitions: roman type.

– *Test specifications: italic type.*

– Informative material appearing outside of tables, such as notes, examples and references: in smaller type. Normative text of tables is also in a smaller type.

– TERMS DEFINED IN CLAUSE 3 OF THE GENERAL STANDARD, IN THIS PARTICULAR STANDARD OR AS NOTED: SMALL CAPITALS.

AVA Documents Document Sharing Hub
Full document details: 20/30419927 DC

In referring to the structure of this standard, the term

– “clause” means one of the seventeen numbered divisions within the table of contents, inclusive of all subdivisions (e.g. Clause 7 includes subclauses 7.1, 7.2, etc.);

– “subclause” means a numbered subdivision of a clause (e.g. 7.1, 7.2 and 7.2.1 are all subclauses of Clause 7).

References to clauses within this standard are preceded by the term “Clause” followed by the clause number. References to subclauses within this collateral standard are by number only.

In this standard, the conjunctive “or” is used as an “inclusive or” so a statement is true if any combination of the conditions is true.

The verbal forms used in this standard conform to usage described in Annex H of the ISO/IEC Directives, Part 2. For the purposes of this standard, the auxiliary verb:

– “shall” means that compliance with a requirement or a test is mandatory for compliance with this standard;

– “should” means that compliance with a requirement or a test is recommended but is not mandatory for compliance with this standard;

– “may” is used to describe a permissible way to achieve compliance with a requirement or test.

An asterisk (*) as the first character of a title or at the beginning of a paragraph or table title indicates that there is guidance or rationale related to that item in Annex AA.

A list of all parts of the IEC 60601 series, published under the general title *Medical electrical equipment,* can be found on the IEC website.

Documents
Document Sharing Hub
Full document details: 20/30419927 DC

Introduction

IEC 80601-2-52 applies to the BASIC SAFETY and ESSENTIAL PERFORMANCE of MEDICAL BEDS for ADULTS, hence not covering requirement for beds for CHILDREN and ADULTS with atypical anatomy. This particular standard is based on the Mandate M/467 Medical beds issued by the European Commision with the following background information:

It appears, from a first analysis undertaken by Competent Authorities, that the current set of standards is not adapted to the needs of CHILDREN or ADULTS with an atypical anatomy. IEC 80601-2-52 does not foresee a maximum distance for the bars that is small enough to prevent accidents.

According to the Competent Authorities' representatives, a part of the safety problem is due to the fact that medical beds for ADULTS are not appropriately labelled as being designed only for ADULTS with a normal anatomy. Users are therefore not always aware of the risk of medical beds for young PATIENTS or for ADULTS with an atypical anatomy. Hospital administrations do not always see a need to buy medical beds which are appropriate for CHILDREN or for ADULTS with an atypical anatomy. Therefore, clear labelling of the targeted PATIENT groups for medical beds complying with IEC 80601-2-52 could reduce the risk of inappropriate use of this kind of medical beds for CHILDREN or for ADULTS with an atypical anatomy. Labeling is taken care of by IEC 80601-2-52.

Competent Authorities' representatives also stated that there is a need for the development of requirements for MEDICAL BEDS and COTS for CHILDREN and ADULTS with an atypical anatomy.

In order to prevent IEC 80601-2-52 from being extraordinary complex to use, CLC/TC 62 decided to develop this particular standard rather than further amending IEC 80601-2-52 in relation to use for CHILDREN and ADULTS with an atypical anatomy.

This standard is based on input from the following standards and reports:

- EN 60601-2-52, *Medical electrical equipment — Part 2-52: Particular requirements for basic safety and essential performance of medical beds (IEC 60601-2-52)*[1];
- EN 716-1, *Furniture — Children's cots and folding cots for domestic use — Part 1: Safety requirements*;
- EN 716-2, *Furniture — Children's cots and folding cots for domestic use — Part 2: Test methods*;
- EN 1130-2, *Furniture — Cribs and cradles for domestic use — Part 2: Test methods*;
- EN 747-1, *Furniture — Bunk beds and high beds — Part 1: Safety, strength and durability requirements*;
- EN 747-2, *Furniture — Bunk beds and high beds — Part 2: Test methods*;
- CEN/TR 13387 (all parts), *Child use and care articles — General safety guidelines*;
- DIN 32623, *Hospital children's cots made from metal and plastic — Safety requirements and testing*;
- Nordic Requirements specification for Adjustable beds for disabled children.
- EN 50637 Medical electrical equipment — Particular requirements for the basic safety and essential performance of medical beds for children

1) This document is currently impacted by the amendment EN 60601-2-52:2010/A1:2015 and the corrigendum EN 60601-2-52:2010/AC:2011.

Documents
Document Sharing Hub
Full document details: 20/30419927 DC

MEDICAL ELECTRICAL EQUIPMENT –

Part 2-89: Particular requirements for the basic safety and essential performance of medical beds for children

Documents
Document Sharing Hub

Full document details: 20/30419927 DC

201.1 Scope, object and related standards

Clause 1 of EN 60601-1:2006, *Medical electrical equipment — Part 1: General requirements for basic safety and essential performance*, applies, except as follows:

201.1.1 * Scope

Replacement:

This Standard applies to the BASIC SAFETY and ESSENTIAL PERFORMANCE of MEDICAL BEDS, hereafter referred to as MEDICAL BEDS as defined in 201.3.218, intended for CHILDREN as defined in 201.3.207, and ADULTS with atypical anatomy (ADULTS ranging outside the definition for ADULTS in 201.3.201).

This standard applies to medical beds with nonadjustable and electrical / mechanical adjustable functions.

This Standard applies to MEDICAL BEDS with an INTERNAL LENGTH of up to 180 cm suitable to a body length of 155 cm.

NOTE 1 The limitation of 180 cm is in order to minimize the foreseeable misuse, of a parent sharing the bed with the child or that the bed will be used by an ADULT.

If a manufacturer wishes to make a bed that can be used by both a child and an ADULT, e.g. length of 180 cm or more, then it will fulfil both IEC 80601-2-52 and this particular standard.

This Standard does not apply to MEDICAL BEDS intended for ADULTS as defined in 201.3.201 (covered by EN 60601-2-52).

This Standard does not apply to :

- incubators covered by EN 60601-2-19 ;
- beds for children, covered by EN 716-1 and EN 716-2 ;
- cribs and cradles covered by EN 1130 (all parts) ;
- bunk beds and high beds, covered by EN 747-1 and 747-2.

If a clause or subclause is specifically intended to be applicable to a MEDICAL BED only, or to ME SYSTEMS only, the title and content of that clause or subclause will say so. If that is not the case, the clause or subclause applies both to MEDICAL BEDS and to ME SYSTEMS, as relevant.

HAZARDS inherent in the intended physiological function of MEDICAL BED or ME SYSTEMS within the scope of this standard are not covered by specific requirements in this standard except in 7.2.13 and 8.4.1 of EN 60601-1:2006.

NOTE 2 See also 4.2 of EN 60601-1:2006.

NOTE 3 Body length is measured from crown to sole.

201.1.2 Object

Replacement:

The object of this particular standard is to establish particular BASIC SAFETY and ESSENTIAL PERFORMANCE requirements and test methods for MEDICAL BEDS as defined in 201.3.218 intended for CHILDREN as defined in 201.3.207.

201.1.3 Collateral standards

Addition:

This particular standard refers to those applicable collateral standards that are listed in Clause 2 of EN 60601-1:2006 standard and its accociated amendments and corrigenda and Clause 2 of this particular standard.

EN 60601-1-3 and EN 60601-1-10 do not apply. All other published collateral standards in the EN 60601-1 series apply as published.

AVA Documents Document Sharing Hub
Full document details: 20/30419927 DC

201.1.4 Particular standards

Replacement:

In the EN 60601 series, particular standards may modify, replace or delete requirements contained in EN 60601-1:2006 and collateral standards as appropriate for the particular ME EQUIPMENT under consideration, and may add other BASIC SAFETY and ESSENTIAL PERFORMANCE requirements.

A requirement of this particular standard takes priority over EN 60601-1:2006.

The numbering of clauses and subclauses of this particular standard corresponds to that of EN 60601-1:2006 with the prefix “201” (e.g. 201.1 in this standard addresses the content of Clause 1 of EN 60601-1:2006) or applicable collateral standard with the prefix “20x” where x is the final digit(s) of the collateral standard document number (e.g. 202.4 in this particular standard addresses the content of Clause 4 of the EN 60601-1-2:2015 collateral standard, 203.4 in this particular standard addresses the content of Clause 4 of the EN 60601-1-3:2008 collateral standard, etc.). The changes to the text of EN 60601-1:2006 are specified by the use of the following words:

"Replacement" means that the clause or subclause of EN 60601-1:2006 or applicable collateral standard is replaced completely by the text of this particular standard.

"Addition" means that the text of this particular standard is additional to the requirements of EN 60601-1:2006 or applicable collateral standard.

"Amendment" means that the clause or subclause of EN 60601-1:2006 or applicable collateral standard is amended as indicated by the text of this particular standard.

Subclauses, figures or tables which are additional to those of EN 60601-1:2006 are numbered starting from 201.101. However, due to the fact that definitions in EN 60601-1:2006 are numbered 3.1 through 3.147, additional definitions in this standard are numbered beginning from 201.3.201. Additional annexes are lettered AA, BB, etc., and additional items aa), bb), etc.

Subclauses, figures or tables which are additional to those of a collateral standard are numbered starting from 20x, where “x” is the number of the collateral standard, e.g. 202 for EN 60601-1-2, 203 for EN 60601-1-3, etc.

The term "this standard" is used to make reference to EN 60601-1:2006, any applicable collateral standards and this particular standard taken together.

Where there is no corresponding clause or subclause in this particular standard, the clause or subclause of EN 60601-1:2006 or applicable collateral standard, although possibly not relevant, applies without modification; where it is intended that any part of EN 60601-1:2006 or applicable collateral standard, although possibly relevant, is not to be applied, a statement to that effect is given in this particular standard.

201.2 Normative references

NOTE Informative references are listed in the Bibliography.

Clause 2 of EN 60601-1:2006, *Medical electrical equipment — Part 1: General requirements for basic safety and essential performance*, applies except as follows:

Addition:

EN 71-3, *Safety of toys — Part 3: Migration of certain elements*

EN 716-2, *Furniture — Children's cots and folding cots for domestic use — Part 2: Test methods*

EN 1021-1, *Furniture — Assessment of the ignitability of upholstered furniture — Part 1: Ignition source smouldering cigarette*

EN 1021-2, *Furniture — Assessment of the ignitability of upholstered furniture — Part 2: Ignition source match flame equivalent*

Documents
Document Sharing Hub
Full document details: 20/30419927 DC

EN 13501-1, *Fire classification of construction products and building elements — Part 1: Classification using data from reaction to fire tests*

EN 50525-2-21, *Electric cables — Low voltage energy cables of rated voltages up to and including 450/750 V (Uo/U) — Part 2-21: Cables for general applications — Flexible cables with crosslinked elastomeric insulation*

EN 60068-2-31, *Environmental testing — Part 2-31: Tests — Test Ec: Rough handling shocks, primarily for equipment-type specimens (IEC 60068-2-31)*

Replacement of the reference to ISO 10993 (all parts) (reference to the corresponding EN ISO series):

EN ISO 10993 (all parts), *Biological evaluation of medical devices (ISO 10993, all parts)*

Replacement of the references to IEC 60227-1:1993 and IEC 60245-1:2003 (not to be dated anymore):

IEC 60227-1, *Polyvinyl chloride insulated cables of rated voltages up to and including 450/750 V — Part 1: General requirements*

IEC 60245-1, *Rubber insulated cables — Rated voltages up to and including 450/750 V — Part 1: General requirements*

Replacement of the references to EN 60601-1-2 and EN 60601-1-3 (now to be dated):

EN 60601-1-2:2015, *Medical electrical equipment — Part 1-2: General requirements for basic safety and essential performance — Collateral Standard: Electromagnetic disturbances — Requirements and tests (IEC 60601-1-2:2014)*

EN 60601-1-3:2008, *Medical electrical equipment — Part 1-3: General requirements for basic safety and essential performance — Collateral Standard: Radiation protection in diagnostic X-ray equipment (IEC 60601-1-3:2008)*

Deletion:

ISO 9614-1, *Acoustics — Determination of sound power levels of noise sources using sound intensity — Part 1: Measurement at discrete points*

201.3 Terms and definitions

For the purposes of this document, the terms and definitions given in Clause 3 of EN 60601-1:2006 apply, except as follows.

NOTE An index of defined terms is found at the very end of this document..

201.3.8
APPLIED PART
Addition:
all parts of the MEDICAL BED

201.3.67
MULTIPLE SOCKET-OUTLET
MSO
Replacement:
one or more socket-outlets intended to be connected to, or integral with, flexible cables or cords or ME EQUIPMENT for SUPPLY MAINS or equivalent voltage

NOTE A MULTIPLE SOCKET-OUTLET can be a separate item or an integral part of equipment.

Documents
Document Sharing Hub
Full document details: 20/30419927 DC

201.3.76
PATIENT
Replacement:

person undergoing a medical procedure or DISABLED PERSON

NOTE Whenever the term PATIENT is used, it comprises both ADULTS with an atypical anatomy and CHILDREN.

201.3.131
*** TRAPPING ZONE**

Addition:

locations where the PATIENT or other persons can become entrapped, entangled, wedged, or stuck in or between parts of the MEDICAL BED, such as the SIDE RAILS, HEAD/FOOT BOARD, MATTRESS SUPPORT PLATFORM or mattress

Addition:

201.3.201
ADULT
PATIENT having a physical size equal to or more than 146 cm, a mass equal to or more than 40 kg and a body mass index (BMI) equal to or more than 17

[SOURCE: EN 60601-2-52:2010/A1:2015, 201.3.219]

201.3.202
*** APPLICATION ENVIRONMENT 1**
intensive/critical care provided in a hospital where 24 h medical supervision and constant monitoring is required and provision of life support system/equipment used in medical procedures is essential to maintain or improve the vital functions of the PATIENT

201.3.203
*** APPLICATION ENVIRONMENT 2**
acute care provided in a hospital or other medical facility where medical supervision and monitoring is required and ME EQUIPMENT used in medical procedures is often provided to help maintain or improve the condition of the PATIENT

201.3.204
*** APPLICATION ENVIRONMENT 3**
long-term care in a medical area where medical supervision is required and monitoring is provided if necessary and ME EQUIPMENT used in medical procedures may be provided to help maintain or improve the condition of the PATIENT

NOTE This includes use in CHILDREN'S nursing homes and in rehabilitation facilities.

201.3.205
*** APPLICATION ENVIRONMENT 4**
care provided in a domestic area where ME EQUIPMENT is used to alleviate or compensate for an injury, disability or disease

NOTE This excludes use in all other APPLICATION ENVIRONMENTs (e.g. CHILDREN'S nursing homes and rehabilitation facilities) when a MEDICAL BED is purely designed for APPLICATION ENVIRONMENT 4.

201.3.206
*** APPLICATION ENVIRONMENT 5**
outpatient (ambulatory) care, which is provided in a hospital or other medical facility, under medical supervision where ME EQUIPMENT, is provided for the need of persons with illness, injury or disability for treatment, diagnosis or monitoring

AVA Documents
Document Sharing Hub

Full document details: 20/30419927 DC

201.3.207
CHILD
PATIENT having a physical size equal to or less than 155 cm and a mass equal to or less than 70 kg

NOTE Mean length of approx. 145 cm is in several countries like Japan, China and Hungary equivalent to the age of 12 years. In the Netherlands 156 cm is equivalent to the mean length of a 12 year old boy and girl (Childata The Handbook of Child Measurements and Capabilities [7].)

A 12 year old boy with a length of 155 cm and a mass of 70 kg has a BMI of 29,1 which for CHILDREN is considered obese. The 97th percentile weight of a 12 year old girl from Netherlands is 62 kg.

201.3.208
COT
MEDICAL BED with an INTERNAL LENGTH ≥90 cm and ≤140 cm provided with PROTECTION SIDE RAILS also intended for CHILDREN able to stand up in bed

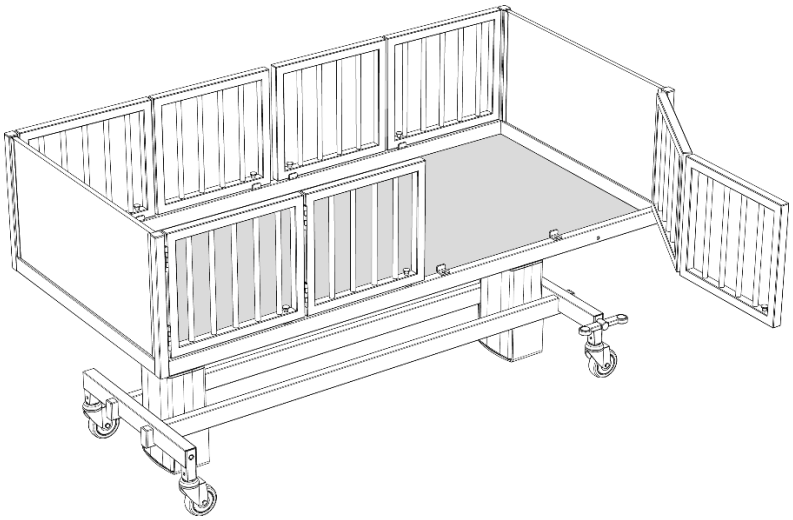

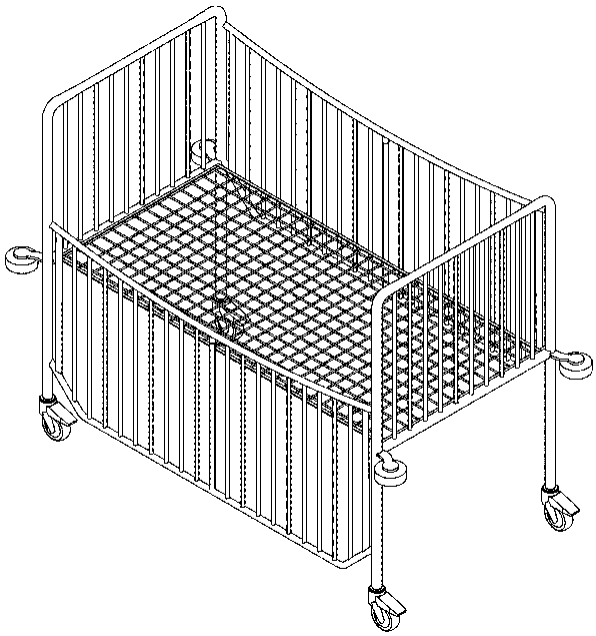

Documents
Document Sharing Hub
Full document details: 20/30419927 DC

201.3.209
CRIB
MEDICAL BED with an INTERNAL LENGTH ≤90 cm provided with PROTECTION PERIMETER, intended for CHILDREN until they are able to sit, kneel or to pull themselves up

NOTE Excluded are medical beds with a swinging or rocking function.

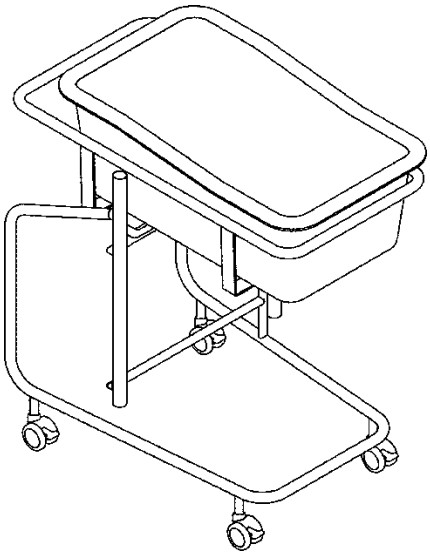

201.3.210
DISABLED PERSON
person with one or more impairments, one or more activity limitations, one or more participation restrictions or a combination thereof

[SOURCE: EN ISO 9999:2011]

201.3.211
HEAD/FOOT BOARD
assembly/assemblies mounted to MEDICAL BED, which identifies for the PATIENT the edge of the head or foot end of the MEDICAL BED and/or MATTRESS SUPPORT PLATFORM

NOTE It may be used as handles to push a MEDICAL BED intended to transport PATIENTS.

201.3.212

INTERNAL LENGTH

length of mattress support platform.

201.3.213
JUNIOR BED
MEDICAL BED with an INTERNAL LENGTH >140 cm and ≤ 180 cm

201.3.214
LIFTING POLE
ACCESSORY attached to a MEDICAL BED and intended to assist support of a PATIENT when changing position by providing a gripping support above the PATIENT

201.3.215
LOCKING DEVICE
mechanism intended to maintain the MEDICAL BED or parts of it in its locked position

201.3.216
LOCKING SYSTEM
mechanism consisting of a LOCKING DEVICE and one or more operating devices, which can deactivate the LOCKING DEVICE, e.g. by pushing a button, pressing a lever or turning a knob

AVA Documents
Document Sharing Hub

Full document details: 20/30419927 DC

201.3.217
MATTRESS OVERLAY
supplementary support surface, which is intended to be placed on an existing mattress, and generally used for prophylactic or therapeutic effect

201.3.218
MATTRESS SUPPORT PLATFORM
structure which supports a PATIENT surface (for example mattress). It may articulate or change positions to facilitate various therapeutic, diagnostic and convenience positions

NOTE See Figure 201.101 and 201.129 a) to 201.129 d).

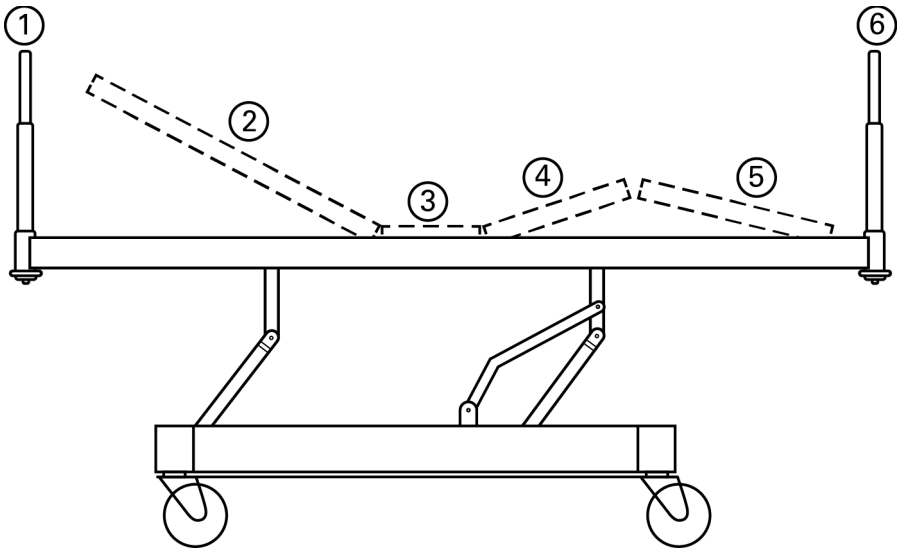

Key

1 HEAD BOARD
2 Back section
3 Seat section
4 Upper leg section
5 Lower leg section
6 FOOT BOARD

Figure 201.101 – MEDICAL BED, general arrangement (example, schematic presentation only)

201.3.219
*** MEDICAL BED**
device for which the INTENDED USE is sleeping/resting that contains a MATTRESS SUPPORT PLATFORM and intended to assist in diagnosis, monitoring, prevention, treatment, alleviation of disease or compensation for an injury or handicap

NOTE 1 Excluded are devices for which the INTENDED USE is mainly for examination or transportation under medical supervision (e.g. stretcher, examination table)

NOTE 2 Whenever the term MEDICAL BED is used it comprises CRIBS, COTS AND JUNIOR BEDS.

201.3.220
MOTION LOCKOUT CONTROL
auxiliary subsystem that deactivates motion controls

201.3.221
OVERSIZE COT
COT with an INTERNAL LENGTH ≥ 140 cm and ≤ 180 cm provided with PROTECTION SIDE RAILS also intended for CHILDREN able to stand up in bed

Documents
Document Sharing Hub
Full document details: 20/30419927 DC

201.3.222
PENDANT CONTROL
handheld device, which has a FUNCTIONAL CONNECTION to the MEDICAL BED, controlling at least MEDICAL BED articulations and/or movements

NOTE PENDANT CONTROLS may be wired, or wireless, and may integrate other functions, (e.g. communications, radio/tv, etc.). NOTE Integrated controls are excluded.

201.3.223
PROTECTION PERIMETER
fully enclosed solid physical barrier e.g.bowl or basin, which is integral to the overall construction of a MEDICAL BED, which will prevent the PATIENT from falling out of bed and which can be movable, e.g. sliding sides, drop sides, folding sides

NOTE Wherever a solid physical barrier is used there might be a risk of suffocation caused by lack of oxygen.

201.3.224
PROTECTION SIDE RAIL
physical barrier, which shall be integral to the overall construction of a MEDICAL BED and is positioned to the side(s) of the MEDICAL BED which will prevent the PATIENT from getting out of bed by itself, and which can be movable, e.g. sliding sides, drop sides, folding sides

NOTE Whenever the term SIDE RAIL is used it comprises PROTECTION SIDE RAIL. – see COT and CRIB.

201.3.225
SIDE RAIL
physical barrier, which may be a detachable ACCESSORY or integral to the overall construction of a MEDICAL BED and is mounted to the side(s) of the MEDICAL BED

NOTE When a SIDE RAIL is closed/fully raised, it provides a physical barrier, which is intended to reduce the RISK of the PATIENT accidentally slipping or rolling off the mattress.

201.3.226
SPECIALITY MATTRESS
mattress intended for prophylactic or therapeutic effect

201.3.227
UNDERCARRIAGE
all components of the MEDICAL BED below the MATTRESS SUPPORT PLATFORM

201.4 General requirements

Clause 4 of EN 60601-1:2006 applies, except as follows:

201.4.2 *Risk management process for ME EQUIPMENT and ME SYSTEM

Addition:

The MANUFACTURER shall include, in the RISK MANAGEMENT PROCESS, HAZARDS related to PATIENTS taller than 155 cm and with a mass greater than 70 kg.

NOTE E.g. greater reach of arms in relation to safe distances for not being able to open PROTECTION SIDE RAILS.

Compliance is checked by inspection of the RISK MANAGEMENT FILE

201.5 General requirements for testing of ME EQUIPMENT

Clause 5 of EN 60601-1:2006 applies, except as follows:

Additional subclauses:

AVA Documents Document Sharing Hub
Full document details: 20/30419927 DC

201.5.101 * Entrapment test TOOLS

Figures 201.102a through 201.102e illustrate entrapment test TOOLS.

Dimensions in millimetres

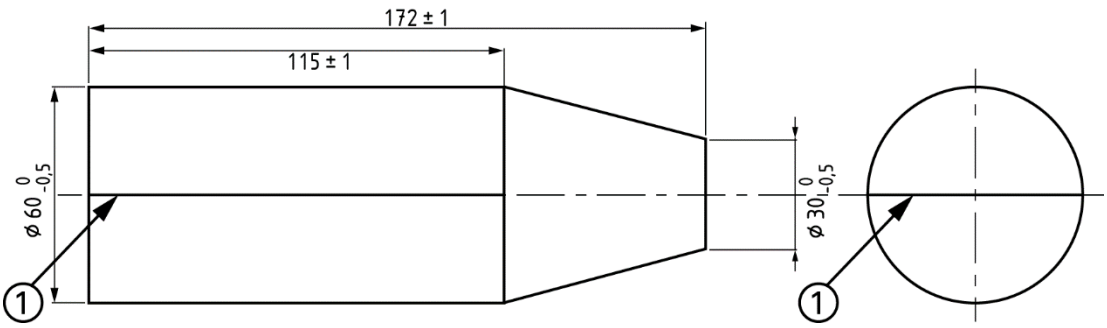

Key

1 Marked centre line

Total weight 3,3 kg ± 0,05 kg

Surface roughness 1,6 µm

Figure 201.102a – Cone TOOL

Dimensions in millimetres

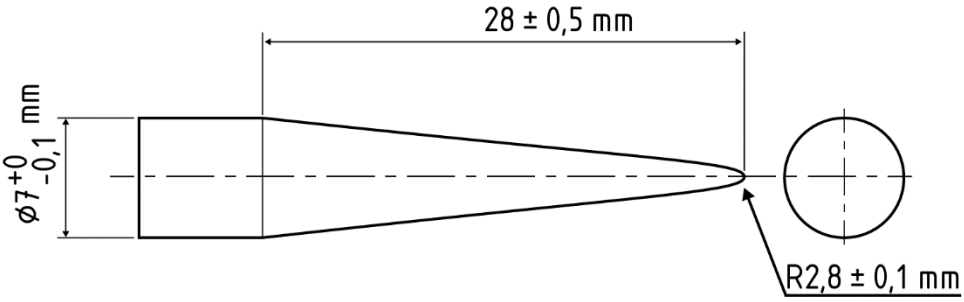

Figure 201.102b – Finger probe for mesh

Documents
Document Sharing Hub
Full document details: 20/30419927 DC

Dimensions in millimetres

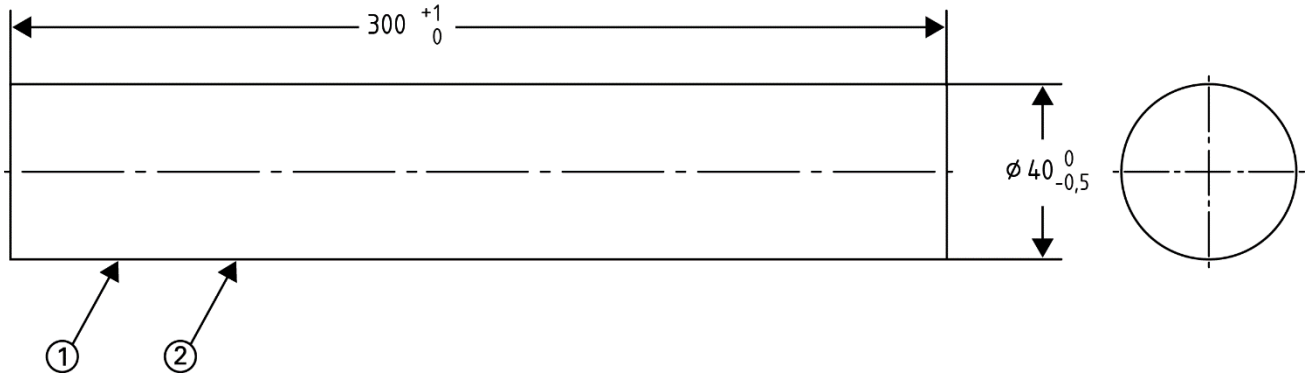

Key

1 Surface roughness 1,6 µm

2 Total weight 3,3 kg ±0,05 Kg

Figure 201.102c – Cylinder TOOL

Dimensions in millimetres

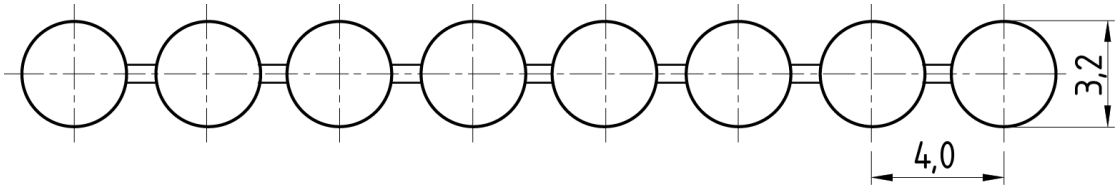

Figure 201.102d – Ball chain

Dimensions in millimetres

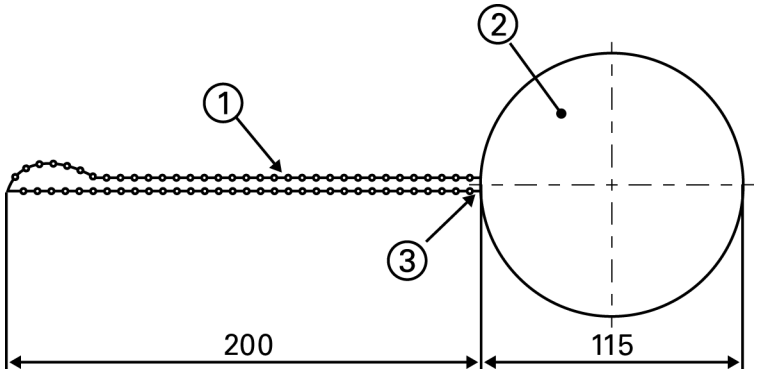

Key

1 ball chain loop with a length of 200 ± 2 mm

2 spherical mass, weight 2,5 ± 0,05 kg and diameter 115 ± 1 mm

3 fixing point

NOTE The ball chain loop is formed by the ball chain entering the spherical mass at a common fixing point.

Figure 201.102e – Ball chain loop and spherical mass

Figure 201.102 – Entrapment test TOOLS

AVA Documents
Document Sharing Hub

Full document details: 20/30419927 DC

201.5.102 Loading pad

The loading pad (see Figure 201.103) is a rigid circular object, 200±5 mm in diameter, the surface of which has a convex spherical curvature of 300 mm radius (R300) with a 12 mm front edge radius (R12).

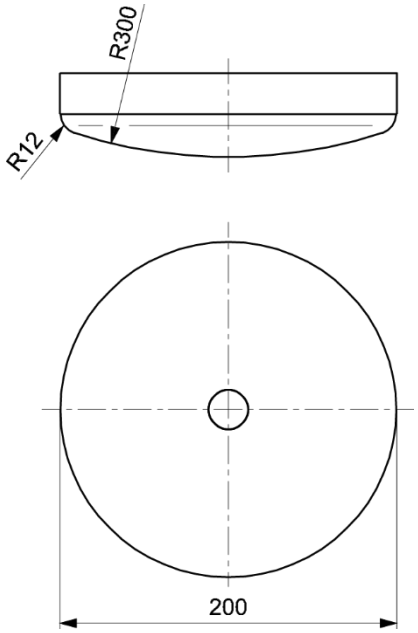

Figure 201.103– Loading pad

Documents
Document Sharing Hub
Full document details: 20/30419927 DC

201.5.103 Impactor

The impactor body is approximately 200 mm in diameter, separated from the striking surface by helical compression springs and free to move relative to it on a line perpendicular to the plane of the central area of the striking surface (see Figure 201.104). The body and associated parts minus the springs shall have a mass of (17 ± 0,1) kg and the whole apparatus, including mass, springs and striking surface, shall have a mass of (25 ± 0,1) kg.

Springs shall be such that the combined spring system has a nominal spring rate of (7 ± 2) N/mm and the total friction resistance of the moving parts is less than 1 N. The spring system shall be compressed to an initial load of (1 040 ± 5) N (measured statically), and the amount of spring compression movement available from the initial compression point to the point where the springs become fully closed shall not be less than 60 mm.

The striking surface shall be a rigid circular object, (200 ± 5) mm in diameter, the face of which has a convex spherical curvature of 300 mm radius (R300) with a 12 mm front edge radius (R12).

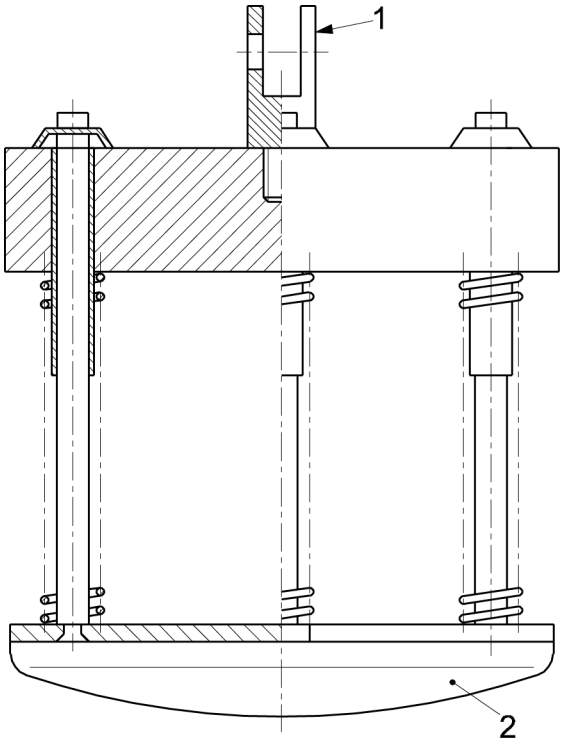

Key

1 connecting part of the lifting device which shall not restrain the free fall

2 striking surface

Figure 201.104 – Impactor

Documents
Document Sharing Hub
Full document details: 20/30419927 DC

201.5.104 Side impactor

The side impactor is a pendulum with a cylindrical head approximately 100 mm diameter made of steel. Length of the pendulum from pivot point to centre of gravity is approximately 250 mm (see Figure 201.105). The head of the pendulum shall be surrounded by a 10 mm thick layer of rubber of hardness 76 IRHD to 78 IRHD in accordance with ISO 7619-2. The total mass shall be 2 kg.

Dimensions in millimetres

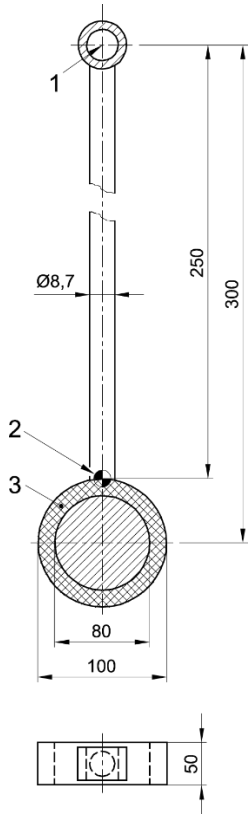

Key

1 pivot point

2 centre of gravity

3 rubber 76 to 78 IRHD

Figure 201.105 - Side impactor

201.5.105 Small Finger Probe

Parts of ME EQUIPMENT that are to be regarded as ACCESSIBLE PARTS are identified by inspection and, where necessary, by testing. In case of doubt, a part of ME EQUIPMENT that is to be regarded as an ACCESSIBLE PART is determined by a test with the small finger probe shown in Figure 130, applied in a bent or straight position:

– for all positions of the ME EQUIPMENT when operated as in NORMAL USE, and
– after opening ACCESS COVERS and removal of parts, including lamps, fuses and fuse holders, when:
  i) the ACCESS COVERS can be opened without the use of a TOOL, or
  ii) the instructions for use instruct a LAY OPERATOR to open the relevant ACCESS COVER.

Documents
Document Sharing Hub
Full document details: 20/30419927 DC

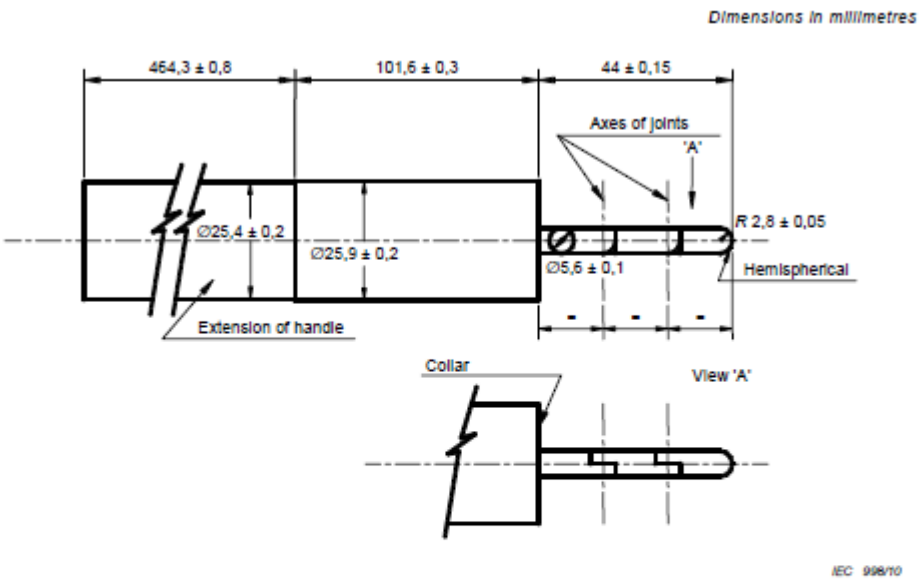

– Finger: metal material

– Handle: insulating material

NOTE 1 The extension of the handle represents the arm of the child.

The handle is provided with an extension 464,3 mm long, and the probe should be applied with or without this extension, whichever is the more onerous condition. Both joints shall permit movement in the same plane and the same direction through an angle of 90°.

NOTE 2 This probe is intended to simulate access to hazardous parts by children of 36 months or less.

[IEC 61032:1997 [8], Figure 13]

Figure 201.130 Small Finger Probe ø 5,6

201.6 Classification of ME EQUIPMENT and ME SYSTEMS

Clause 6 of EN 60601-1:2006 applies, except as follows:

201.6.2 *Protection against electrical shock

Addition:

For APPLICATION ENVIRONMENT 4, the MEDICAL BED shall be CLASS II.

201.7 ME EQUIPMENT identification, marking and documents

Clause 7 of EN 60601-1:2006 applies, except as follows:

Additional:

Self-adhesive labels and decals shall not be used on the internal surfaces of MEDICAL BED, SIDE RAILS and HEAD/FOOT BOARDS.

201.7.2.2 Identification

Replacement of the first paragraph:

The MEDICAL BED shall be marked with the name or trademark and address of the MANUFACTURER, MODEL OR TYPE REFERENCE and means to allow traceability.

Documents
Document Sharing Hub
Full document details: 20/30419927 DC

Any detachable components shall be marked with the name or trademark and address of the MANUFACTURER, MODEL OR TYPE REFERENCE and means to allow traceability unless mis-identification does not present an unacceptable RISK.

Additional subclauses:

201.7.2.2.101 * Marking of maximum PATIENT weight and SAFE WORKING LOAD

The MEDICAL BED shall be marked with the corresponding maximum PATIENT weight (see 201.9.8.3.1) and SAFE WORKING LOAD (for symbol see Figure 201.106).

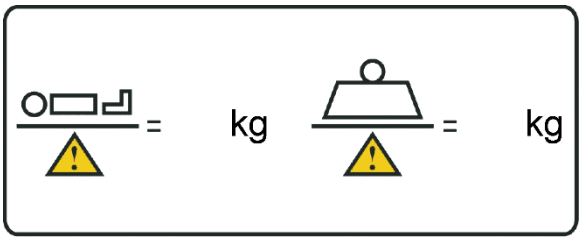

Figure 201.106 – Graphical symbol for maximum PATIENT weight and SAFE WORKING LOAD

Detachable parts of a MEDICAL BED of a mass of more than 20 kg shall be marked with symbol ISO 7000-1321 (2004-01): .

201.7.2.2.102 Marking for machine washable MEDICAL BEDS by an automatic washing system

MEDICAL BEDS intended for use with an automatic washing system shall be marked with the following text to distinguish them from MEDICAL BEDS which cannot tolerate such cleaning methods: “For cleaning purposes this bed can be used with automatic washing systems.”

201.7.2.2.103 Marking for MEDICAL BEDS intended for jet stream washing

MEDICAL BEDS intended for use with jet stream washing shall be marked with the following text: “For cleaning purposes this bed can be used with jet stream washing.”

Documents
Document Sharing Hub
Full document details: 20/30419927 DC

201.7.2.2.104 Marking for compatible mattresses

MEDICAL BEDS designed to have replacement mattresses shall be marked with the following sentence as a warning: “Incompatible mattresses can create HAZARDS. Read instructions for use” or a symbol as appropriate on a prominent place on the MATTRESS SUPPORT PLATFORM indicating the compatible mattresses (for symbol see Figure 201.107).

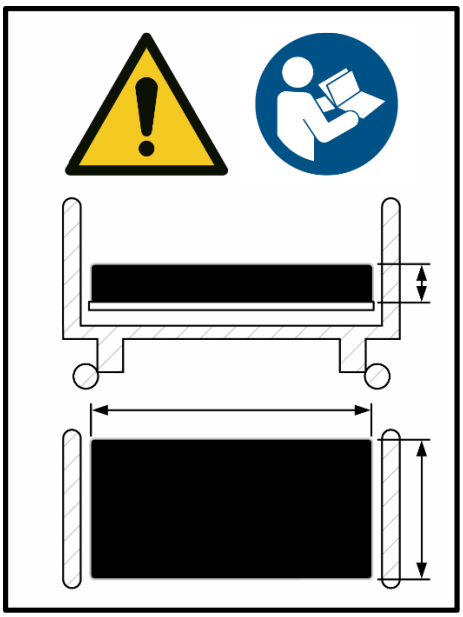

Figure 201.107 – Marking for compatible mattresses specified by the MANUFACTURER

201.7.2.2.105 Marking for detachable SIDE RAILS

MEDICAL BEDS designed to have detachable SIDE RAILS shall be marked with the following sentence as a warning: “Incompatible SIDE RAILS can create HAZARDS. Read instructions for use” or use a symbol as appropriate on a prominent place near the attachment point of the SIDE RAIL, indicating the compatible SIDE RAILS (for symbol see Figure 201.108).

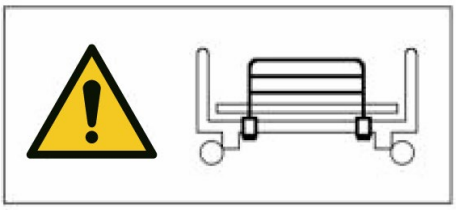

Figure 201.108 – Marking for detachable SIDE RAILS specified by the MANUFACTURER

Documents
Document Sharing Hub
Full document details: 20/30419927 DC

471 **201.7.2.2.106 Marking on the MEDICAL BED for PATIENT length**

472 The MEDICAL BED shall be marked on a prominent place with a symbol (for symbol see Figure 201.109).

473

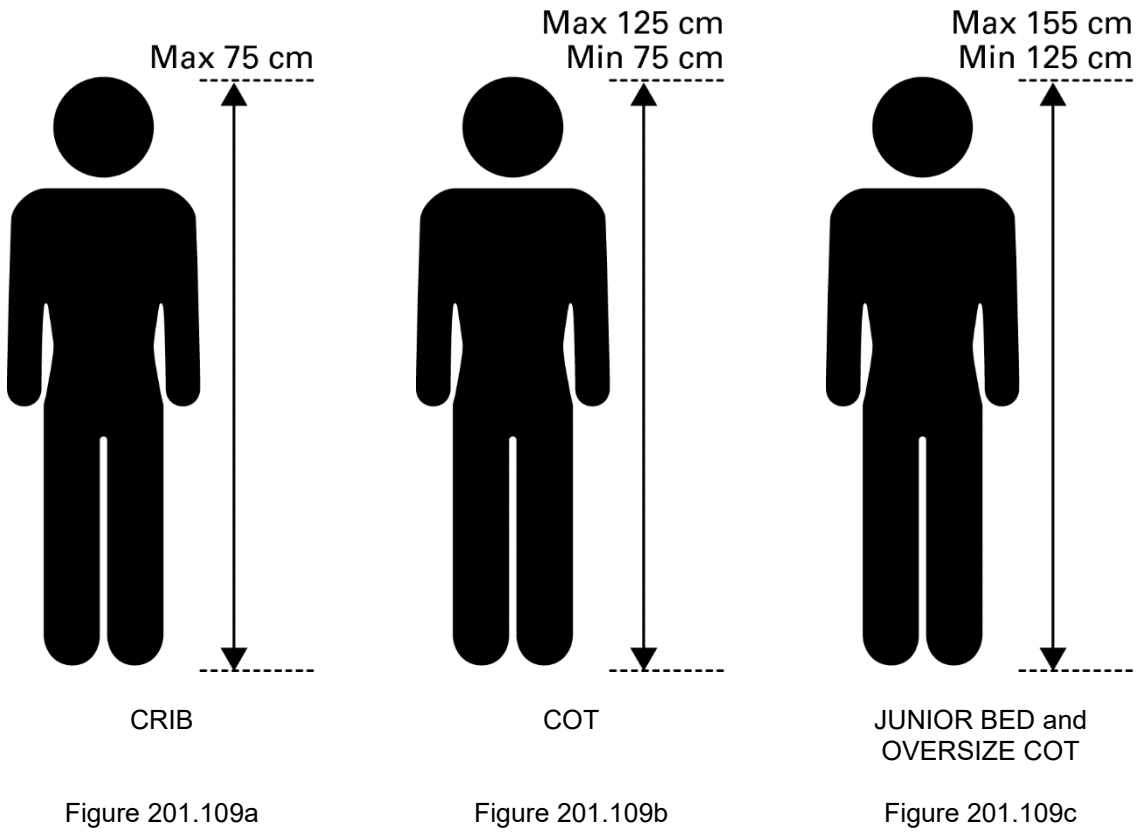

474 **Figure 201.109 – Description of allowed length of PATIENT**

475 NOTE For CRIB and COT INTERNAL LENGTH is considered the length of the CHILD plus 15 cm. For JUNIOR BED and OVERSIZE COT the
476 INTERNAL LENGTH of the bed is considered the length of the PATIENT plus 25 cm.

Documents
Document Sharing Hub
Full document details: 20/30419927 DC

201.7.2.2.107 Marking on the medical bed for positioning PATIENT in MEDICAL BED

The MEDICAL BED shall be marked on a prominent place with a symbol showing the intended body position in bed (e.g. head and foot-end) if the construction of the MEDICAL BED and ACCESSORIES is asymetrical (for example of symbol see Figure 201.110).

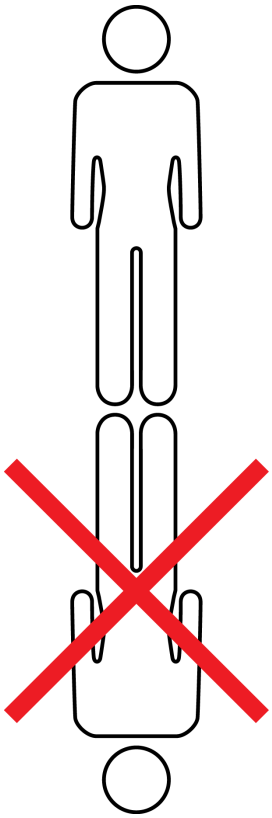

Figure 201.110 – Example of marking on the MEDICAL BED for positioning PATIENT in MEDICAL BED

201.7.2.4 ACCESSORIES

Addition:

Where an overload on an ACCESSORY that is intended to support loads can create an unacceptable RISK, the corresponding SAFE WORKING LOAD shall be marked on the ACCESSORY.

Compliance is checked by inspection.

201.7.4.2 Control devices

Addition:

The operation of a MOTION LOCKOUT CONTROL shall be disclosed by markings or symbols as appropriate on the outside of the MEDICAL BED and which are visible from a position of NORMAL USE (see Figure 201.111).

NOTE Example: "Engage the MOTION LOCKOUT CONTROL if a PATIENT could be injured due to inadvertent motion of the MATTRESS SUPPORT PLATFORM."

Compliance is checked by inspection of the MEDICAL BED.

Documents
Document Sharing Hub

Full document details: 20/30419927 DC