Draft for Public Comment

Form 36

DPC: 20/30419928 DC

BSI Group Headquarters

389 Chiswick High Road London W4 4AL

Tel: +44 (0)20 8996 9000
Fax: +44 (0)20 8996 7400
www.bsigroup.com

Date: 06 May 2020
Origin: International

Latest date for receipt of comments: 17 June 2020

Project No. 2020/00041

Responsible committee: CH/62/4 Electromedical equipment

Interested committees:

Title: Draft BS EN IEC 80601-2-52 Medical electrical equipment. Part 2-52: Particular requirements for the basic safety and essential performance of medical beds.

Please notify the secretary if you are aware of any keywords that might assist in classifying or identifying the standard or if the content of this standard

i) has any issues related to 3rd party IPR, patent or copyright
ii) affects other national standard(s)
iii) requires additional national guidance or information

WARNING: THIS IS A DRAFT AND MUST NOT BE REGARDED OR USED AS A BRITISH STANDARD. THIS DRAFT IS NOT CURRENT BEYOND 17 June 2020

This draft is issued to allow comments from interested parties; all comments will be given consideration prior to publication. No acknowledgement will normally be sent. **See overleaf for information on the submission of comments.**

No copying is allowed, in any form, without prior written permission from BSI except as permitted under the Copyright, Designs and Patent Act 1988 or for circulation within a nominating organization for briefing purposes. Electronic circulation is limited to dissemination by e-mail within such an organization by committee members.

Further copies of this draft may be purchased from BSI Shop http://shop.bsigroup.com or from BSI Customer Services, Tel: +44(0) 20 8996 9001 or email cservices@bsigroup.com. British, International and foreign standards are also available from BSI Customer Services.

Information on the co-operating organizations represented on the committees referenced above may be obtained from https://standardsdevelopment.bsigroup.com/.

Responsible Committee Secretary: Miss Jacinta Hampton (BSI)
Direct tel:
E-mail: jacinta.hampton@bsigroup.com

Documents
Document Sharing Hub
Full document details: 20/30419928 DC

Introduction

This draft standard is based on national and international discussions. Your comments on this draft are invited and will assist in the preparation of the consequent standard.

For international standards, comments will be reviewed by the relevant UK national committee before sending the consensus UK vote and comments to the international committee, which will then decide appropriate action. If the international standard is approved, it is usual for the text to be published as a British Standard.

For national standards, comments will be reviewed by the relevant UK national committee and the resulting standards published as a British Standard.

UK Vote

Please indicate whether you consider the UK should submit a negative (with supporting technical reasons) or positive vote on this draft. Please indicate if you are aware of any reason why this draft standard should not be published as a British Standard.

Submission of Comments

- **Annotated drafts are not acceptable and will be rejected.**
- All comments should be submitted online at **https://standardsdevelopment.bsigroup.com/**. You will need to register in order to comment.

Template for comments and secretariat observations

Date: xx/xx/20xx	Document: ISO/DIS xxxx

1	2	(3)	4	5	(6)	7
MB	Clause No./ Subclause No./Annex **(e.g. 3.1)**	Paragraph/Figure/ Table/Note	**Type of comment**	**Commend (justification for change) by the MB**	**Proposed change by the MB**	**Secretariat observations on each comment submitted**
	3.1	Definition 1	ed	Definition is ambiguous and needs clarifying.	Amend to read '...so that the mains connector to which no connection...'	
	6.4	Paragraph 2	te	The use of the UV photometer as an alternative cannot be supported as serious problems have been encountered in its use in the UK.	Delete reference to UV photometer.	

Documents
Document Sharing Hub

Full document details: 20/30419928 DC

62D/1759A/CD

COMMITTEE DRAFT (CD)

PROJECT NUMBER: **IEC 80601-2-52 ED1**	
DATE OF CIRCULATION: **2020-05-01**	CLOSING DATE FOR COMMENTS: **2020-07-17***
SUPERSEDES DOCUMENTS: **62D/1740A/RR**	

IEC SC 62D : ELECTROMEDICAL EQUIPMENT	
SECRETARIAT: United States of America	SECRETARY: Ms Hae Choe
OF INTEREST TO THE FOLLOWING COMMITTEES:	PROPOSED HORIZONTAL STANDARD: ☐ Other TC/SCs are requested to indicate their interest, if any, in this CD to the secretary.

FUNCTIONS CONCERNED:

☐ EMC ☐ ENVIRONMENT ☐ QUALITY ASSURANCE ☒ SAFETY

This document is still under study and subject to change. It should not be used for reference purposes.

Recipients of this document are invited to submit, with their comments, notification of any relevant patent rights of which they are aware and to provide supporting documentation.

TITLE:

Medical electrical equipment - Part 2-52: Particular requirements for the basic safety and essential performance of medical beds

NOTE FROM TC/SC OFFICERS:

This is a joint project with ISO.

*Due to COVID-19 pandemic, the IEC/SC 62D – ISO/TC 173/JWG 4 meeting has been postponed. In light of the current situation, extension of the commenting deadline is being set to give National Committee members a bit more time to look over this proposed draft.

Copyright © 2020 International Electrotechnical Commission, IEC. All rights reserved. It is permitted to download this electronic file, to make a copy and to print out the content for the sole purpose of preparing National Committee positions. You may not copy or "mirror" the file or printed version of the document, or any part of it, for any other purpose without permission in writing from IEC.

Documents
Document Sharing Hub

Full document details: 20/30419928 DC

CONTENTS

FOREWORD 5
INTRODUCTION 8
201.1 Scope, object and related standards 9
201.2 Normative references 11
201.3 Terms and definitions 11
201.4 General requirements 15
201.5 General requirements for testing of ME EQUIPMENT 15
201.6 Classification of ME EQUIPMENT and ME SYSTEMS 17
201.7 ME EQUIPMENT identification, marking and documents 17
201.8 Protection against electrical HAZARDS from ME EQUIPMENT 23
201.9 Protection against MECHANICAL HAZARDS of ME EQUIPMENT and ME SYSTEMS 24
201.10 Protection against unwanted and excessive radiation HAZARDS 50
201.11 Protection against excessive temperatures and other HAZARDS 50
201.12 Accuracy of controls and instruments and protection against hazardous outputs 53
201.13 HAZARDOUS SITUATIONS and fault conditions 53
201.14 PROGRAMMABLE ELECTRICAL MEDICAL SYSTEMS (PEMS) 54
201.15 Construction of ME EQUIPMENT 54
201.16 ME SYSTEMS 57
201.17 Electromagnetic compatibility of ME EQUIPMENT and ME SYSTEMS 57
Annexes 57
Annex AA (informative) Particular guidance and rationale 58
Annex BB (normative) Design requirements and recommendations for MEDICAL BEDS 74
Annex CC (informative) Particular guidance for assessing risk of entrapment in v-shaped openings 79
Bibliography 85
Index of defined terms used in this particular standard 86

Figure 201.101 – APPLIED PART 11
Figure 201.102 – MEDICAL BED, general arrangement (example, schematic presentation only) 14
Figure 201.103 – Entrapment test tools 16
Figure 201.104 – Loading pad 17
Figure 201.105 – Graphic symbol for maximum PATIENT weight and SAFE WORKING LOAD 18
Figure 201.120 – Physical description of an adult 19
Figure 201.106 – MEDICAL BED function controls and/or actuators: guidelines for creating graphic symbols 21
Figure 201.107 – Example of MEDICAL BED with segmented or split SIDE RAIL 26
Figure 201.108 – Example of MEDICAL BED with single piece SIDE RAIL 27
Figure 201.109 – Allowable spacing for fingers in areas of normal reach around the perimeter of the MATTRESS SUPPORT PLATFORM 32

Documents
Document Sharing Hub
Full document details: 20/30419928 DC

Figure 201.110 – Example using barriers for clearance measurement around the perimeter of the MATTRESS SUPPORT PLATFORM to mitigate PATIENT-finger entrapment 33
Figure 201.111 a) – Foot and toe clearance area between moving parts and the floor 33
Figure 201.111 b) – Toe clearance area between moving parts and the floor 34
Figure 201.111 – Clearance areas 34
Figure 201.112 – Lateral stability test along the side of the MEDICAL BED **Error! Bookmark not defined.**
Figure 201.113 – Longitudinal stability test with removable FOOT BOARD **Error! Bookmark not defined.**
Figure 201.114 – Longitudinal stability test with fixed HEAD/FOOT BOARDS **Error! Bookmark not defined.**
Figure 201.115 – Distribution of SAFE WORKING LOAD for tests 41
Figure 201.116 – Position of loading pad (see Figure 201.104) 44
Figure 201.117 – Application of forces for test of SIDE RAIL 46
Figure 201.118 – Height of SIDE RAIL 49
Figure 201.119a – Angle γ between the back section and the leg section of the MATTRESS SUPPORT PLATFORM 55
Figure 201.119b – Angle γ between the back section and the upper leg section of the MATTRESS SUPPORT PLATFORM 55
Figure 201.119c – Angle γ between the angled back section and upper leg section of the MATTRESS SUPPORT PLATFORM 55
Figure 201.119d – Angle γ between the angled back section and the leg/upper leg section of the MATTRESS SUPPORT PLATFORM 56
Figure 201.119 – Configurations of the MATTRESS SUPPORT PLATFORM 56
Figure 201.120 – Physical description of an ADULT 19
Figure AA.1 – Marking to select recommended mattresses specified by the MANUFACTURER 60
Figure AA.2 – Marking for detachable SIDE RAILS specified by the MANUFACTURER 61
Figure AA.3 – Resultant forces without mattress 64
Figure AA.4 – Resultant forces with mattress 64
Figure AA.5 – Example of 60 mm gap measurement of B 64
Figure AA.6 – Angle measurement example of B 64
Figure AA.7 – Placement of measurement TOOL for measurement of D 65
Figure AA.8 – Example of area D measurement that passes 65
Figure AA.9 – Example of area D measurement that fails 65
Figure AA.10 – Example of area D measurement that fails (on limit) 66
Figure AA.11 – Example of potential PATIENT entrapment in area A within the SIDE RAIL 66
Figure AA.12 – Example of potential PATIENT entrapment in area A below the SIDE RAIL 66
Figure AA.13 – Example of potential PATIENT entrapment in area B 66
Figure AA.14 – Example of potential PATIENT entrapment in area C between split SIDE RAIL 66
Figure AA.15 – Example of potential PATIENT entrapment in area C between SIDE RAIL and HEAD BOARD 67
Figure AA.16 – Example of potential PATIENT entrapment in area D 67
Figure AA.17 – Example of potential PATIENT entrapment in area A below a single piece SIDE RAIL 67
Figure BB.1 – Other areas of possible impact testing ..... **Error! Bookmark not defined.**
Figure BB.2 – Impactor ..... **Error! Bookmark not defined.**

AVA Documents
Document Sharing Hub
Full document details: 20/30419928 DC

Figure BB.3 – Schematic presentation of under MEDICAL BED clearance 77
Figure BB.4 – Recommendations and requirements regarding angles for different sections of the MATTRESS SUPPORT PLATFORM 78
Figure CC.1 – Wedge tool 80
Figure CC.2 – V-shaped opening in relation to B 81
Figure CC.3 – Pass/fail in relation to area B 81
Figure CC.4 – Positioning of wedge tool 82
Figure CC.5 – Pass/fail in relation to area C between HEAD BOARD and FOOT BOARD 83
Figure CC.6 – Pass/fail in relation to area C between split SIDE RAILS 84

Table 201.101 – Protection against PATIENT entrapment 28
Table 201.102 – Protection against inadvertent PATIENT falls 50
Table 24 – Allowable maximum temperatures for skin contact with MEDICAL BED APPLIED PARTS 51
Table BB.1 – Normative and informative requirements for different APPLICATION ENVIRONMENTS 1 to 5 74

Documents
Document Sharing Hub
Full document details: 20/30419928 DC

INTERNATIONAL ELECTROTECHNICAL COMMISSION

MEDICAL ELECTRICAL EQUIPMENT –

Part 2-52: Particular requirements for the basic safety and essential performance of adult medical beds

FOREWORD

1) The International Electrotechnical Commission (IEC) is a worldwide organization for standardization comprising all national electrotechnical committees (IEC National Committees). The object of IEC is to promote international co-operation on all questions concerning standardization in the electrical and electronic fields. To this end and in addition to other activities, IEC publishes International Standards, Technical Specifications, Technical Reports, Publicly Available Specifications (PAS) and Guides (hereafter referred to as "IEC Publication(s)"). Their preparation is entrusted to technical committees; any IEC National Committee interested in the subject dealt with may participate in this preparatory work. International, governmental and non-governmental organizations liaising with the IEC also participate in this preparation. IEC collaborates closely with the International Organization for Standardization (ISO) in accordance with conditions determined by agreement between the two organizations.

2) The formal decisions or agreements of IEC on technical matters express, as nearly as possible, an international consensus of opinion on the relevant subjects since each technical committee has representation from all interested IEC National Committees.

3) IEC Publications have the form of recommendations for international use and are accepted by IEC National Committees in that sense. While all reasonable efforts are made to ensure that the technical content of IEC Publications is accurate, IEC cannot be held responsible for the way in which they are used or for any misinterpretation by any end user.

4) In order to promote international uniformity, IEC National Committees undertake to apply IEC Publications transparently to the maximum extent possible in their national and regional publications. Any divergence between any IEC Publication and the corresponding national or regional publication shall be clearly indicated in the latter.

5) IEC itself does not provide any attestation of conformity. Independent certification bodies provide conformity assessment services and, in some areas, access to IEC marks of conformity. IEC is not responsible for any services carried out by independent certification bodies.

6) All users should ensure that they have the latest edition of this publication.

7) No liability shall attach to IEC or its directors, employees, servants or agents including individual experts and members of its technical committees and IEC National Committees for any personal injury, property damage or other damage of any nature whatsoever, whether direct or indirect, or for costs (including legal fees) and expenses arising out of the publication, use of, or reliance upon, this IEC Publication or any other IEC Publications.

8) Attention is drawn to the Normative references cited in this publication. Use of the referenced publications is indispensable for the correct application of this publication.

9) Attention is drawn to the possibility that some of the elements of this IEC Publication may be the subject of patent rights. IEC shall not be held responsible for identifying any or all such patent rights.

DISCLAIMER
This Consolidated version is not an official IEC Standard and has been prepared for user convenience. Only the current versions of the standard and its amendment(s) are to be considered the official documents.

This Consolidated version of IEC 60601-2-52 bears the edition number 1.1. It consists of the first edition (2009-12) [documents 62D/795/FDIS and 62D/815/RVD] and its amendment 1 (2015-03) [documents 62D/1186/FDIS and 62D/1232/RVD]. The technical content is identical to the base edition and its amendment.

This Final version does not show where the technical content is modified by amendment 1. A separate Redline version with all changes highlighted is available in this publication.

AVA Documents
Document Sharing Hub
Full document details: 20/30419928 DC

International standard IEC 80601-2-52 has been prepared by IEC subcommittee 62D: Electromedical equipment, of IEC technical committee 62: Electrical equipment in medical practice, and by ISO technical committee 173: Assistive products for persons with disability.

It is published as double logo standard.

This publication has been drafted in accordance with the ISO/IEC Directives, Part 2.

In this standard, the following print types are used:

– Requirements and definitions: roman type.
– *Test specifications: italic type.*
– Informative material appearing outside of tables, such as notes, examples and references: in smaller type. Normative text of tables is also in a smaller type.
– TERMS DEFINED IN CLAUSE 3 OF THE GENERAL STANDARD, IN THIS PARTICULAR STANDARD OR AS NOTED: SMALL CAPITALS.

In referring to the structure of this standard, the term

– "clause" means one of the seventeen numbered divisions within the table of contents, inclusive of all subdivisions (e.g. Clause 7 includes subclauses 7.1, 7.2, etc.);
– "subclause" means a numbered subdivision of a clause (e.g. 7.1, 7.2 and 7.2.1 are all subclauses of Clause 7).

References to clauses within this standard are preceded by the term "Clause" followed by the clause number. References to subclauses within this collateral standard are by number only.

In this standard, the conjunctive "or" is used as an "inclusive or" so a statement is true if any combination of the conditions is true.

The verbal forms used in this standard conform to usage described in Annex H of the ISO/IEC Directives, Part 2. For the purposes of this standard, the auxiliary verb:

– "shall" means that compliance with a requirement or a test is mandatory for compliance with this standard;
– "should" means that compliance with a requirement or a test is recommended but is not mandatory for compliance with this standard;
– "may" is used to describe a permissible way to achieve compliance with a requirement or test.

An asterisk (*) as the first character of a title or at the beginning of a paragraph or table title indicates that there is guidance or rationale related to that item in Annex AA.

A list of all parts of the IEC 60601 series, published under the general title *Medical electrical equipment,* can be found on the IEC website.

Documents
Document Sharing Hub

Full document details: 20/30419928 DC

The committee has decided that the contents of the base publication and its amendment will remain unchanged until the stability date indicated on the IEC web site under "http://webstore.iec.ch" in the data related to the specific publication. At this date, the publication will be

- reconfirmed,
- withdrawn,
- replaced by a revised edition, or
- amended.

The contents of the corrigendum of September 2010 have been included in this copy.

Documents
Document Sharing Hub

Full document details: 20/30419928 DC

INTRODUCTION

In 1996, the IEC published the first edition of the particular standard for electrically operated hospital beds, IEC 60601-2-38. The publication was in response to demand in the field for a universal standard addressing HAZARDS specific to the safety of the hospital bed. Used in conjunction with a MANUFACTURER'S RISK ASSESSMENT, the standard was felt to be the current thinking on establishing a basic safety benchmark for industry.

An amendment of IEC 60601-2-38 issued in 1999 recognized the need to mitigate against a RISK of PATIENT entrapment in the SIDE RAILS, again combined with the use of the MANUFACTURER'S RISK ASSESSMENT. Although this improved the particular standard, it still was centered upon electrically operated hospital beds, and failed to take into account manually operated hospital beds and products in other medical environments.

In 2000, the EN 1970 standard (*Adjustable beds for DISABLED PERSONS – Requirements and test methods*) was published, which addressed beds used by DISABLED PERSONS to alleviate or compensate for a disability or handicap. This standard offered a broadened scope in conjunction with IEC 60601-2-38, but after the edition of Amendment 1 to IEC 60601-2-38, the opportunity presented itself to combine the two standards to a common, international standard.

As work began on the integration, the IEC adjusted its stance on BASIC SAFETY and ESSENTIAL PERFORMANCE, integrating them into the third edition of IEC 60601-1. It therefore became necessary to align the new standard with the third edition. The particular standard was given a new number, IEC 60601-2-52, and work began on alignment to third edition.

This particular standard, therefore, is the realization of much work in alignment, and scope adjustment between IEC 60601-2-38, EN 1970, and the third edition of IEC 60601-1. It represents the current thinking in BASIC SAFETY and ESSENTIAL PERFORMANCE of the MEDICAL BED as used to alleviate illness of PATIENTS and disability of DISABLED PERSONS. This is the effort of a joint working group of the IEC and the ISO.

The IEC 80601-2-52 is a continuation of the IEC 60601-2-52 standard. It will align with the children version of the standard IEC 80601-2-89. The nomenclature was changed from IEC 60601-2-52 to IEC 80601-2-52 to indicate joint work between the ISO and the IEC.

AVA Documents
Document Sharing Hub

Full document details: 20/30419928 DC

MEDICAL ELECTRICAL EQUIPMENT –

Part 2-52: Particular requirements for the basic safety and essential performance of adult medical beds

201.1 Scope, object and related standards

Clause 1 of the general standard[1)] applies, except as follows:

201.1.1 * Scope

Replacement:

This International Standard applies to the BASIC SAFETY and ESSENTIAL PERFORMANCE of MEDICAL BEDS as defined in 201.3.212, intended for ADULTS as defined in 201.3.219. Included in scope are both electrical and non-electrical (manual) MEDICAL BEDS.

This standard does not apply for medical beds intended for children and adults with an atypical anatomy covered by IEC 80601-2-89 Medical electrical equipment – Particular requirements for the basic safety and essential performance of medical beds for children.

If a clause or subclause is specifically intended to be applicable to a MEDICAL BED only, or to ME SYSTEMS only, the title and content of that clause or subclause will say so. If that is not the case, the clause or subclause applies both to MEDICAL BED and to ME SYSTEMS, as relevant.

HAZARDS inherent in the intended physiological function of MEDICAL BED or ME SYSTEMS within the scope of this standard are not covered by specific requirements in this standard except in 7.2.13 and 8.4.1 of the general standard.

NOTE See also 4.2 of the General Standard.

201.1.2 Object

Replacement:

The object of this particular standard is to establish particular BASIC SAFETY and ESSENTIAL PERFORMANCE requirements for MEDICAL BEDS as defined in 201.3.212, intended for ADULTS as defined in 201.3.219.

201.1.3 Collateral standards

Addition:

This particular standard refers to those applicable collateral standards that are listed in Clause 2 of the general standard and Clause 2 of this particular standard.

IEC 60601-1-3 and IEC 60601-1-10[2)] do not apply. All other published collateral standards in the IEC 60601-1 series apply as published.

---

1) The general standard is IEC 60601-1:2005, *Medical electrical equipment – Part 1: General requirements for basic safety and essential performance.*

AVA Documents
Document Sharing Hub
Full document details: 20/30419928 DC

201.1.4 Particular standards

Replacement:

In the IEC 60601 series, particular standards may modify, replace or delete requirements contained in the general standard and collateral standards as appropriate for the particular ME EQUIPMENT under consideration, and may add other BASIC SAFETY and ESSENTIAL PERFORMANCE requirements.

A requirement of a particular standard takes priority over the general standard.

For brevity, IEC 60601-1 is referred to in this particular standard as the general standard. Collateral standards are referred to by their document number.

The numbering of clauses and subclauses of this particular standard corresponds to that of the general standard with the prefix “201” (e.g. 201.1 in this standard addresses the content of Clause 1 of the general standard) or applicable collateral standard with the prefix “20x” where x is the final digit(s) of the collateral standard document number (e.g. 202.4 in this particular standard addresses the content of Clause 4 of the IEC 60601-1-2 collateral standard, 203.4 in this particular standard addresses the content of Clause 4 of the IEC 60601-1-3 collateral standard, etc.). The changes to the text of the general standard are specified by the use of the following words:

"Replacement" means that the clause or subclause of the general standard or applicable collateral standard is replaced completely by the text of this particular standard.

"Addition" means that the text of this particular standard is additional to the requirements of the general standard or applicable collateral standard.

"Amendment" means that the clause or subclause of the general standard or applicable collateral standard is amended as indicated by the text of this particular standard.

Subclauses, figures or tables which are additional to those of the general standard are numbered starting from 201.101. However, due to the fact that definitions in the general standard are numbered 3.1 through 3.139, additional definitions in this standard are numbered beginning from 201.3.201. Additional annexes are lettered AA, BB, etc., and additional items aa), bb), etc.

Subclauses, figures or tables which are additional to those of a collateral standard are numbered starting from 20x, where “x” is the number of the collateral standard, e.g. 202 for IEC 60601-1-2, 203 for IEC 60601-1-3, etc.

The term "this standard" is used to make reference to the general standard, any applicable collateral standards and this particular standard taken together.

Where there is no corresponding clause or subclause in this particular standard, the clause or subclause of the general standard or applicable collateral standard, although possibly not relevant, applies without modification; where it is intended that any part of the general standard or applicable collateral standard, although possibly relevant, is not to be applied, a statement to that effect is given in this particular standard.

---

2) IEC 60601-1-10:2007, *Medical electrical equipment – Part 1-10: General requirements for basic safety and essential performance – Collateral Standard: Requirements for the development of physiologic closed-loop controllers*

AVA Documents
Document Sharing Hub

Full document details: 20/30419928 DC

201.2 Normative references

NOTE Informative references are listed in the bibliography on page 81.

Clause 2 of the general standard applies except as follows:

Addition:

IEC 60068-2-31:2008, *Environmental testing – Part 2-31: Tests – Test Ec: Rough handling shocks, primarily for equipment-type specimens*

201.3 Terms and definitions

For the purposes of this document, the terms and definitions given in IEC 60601-1:2005 apply, except as follows:

NOTE An index of defined terms is found beginning on page 82.

201.3.8
APPLIED PART

Addition:

The APPLIED PART includes all parts of the MEDICAL BED that are within reach of the PATIENT, even if they are underneath the MATTRESS SUPPORT SURFACE (see Figure 201.101)

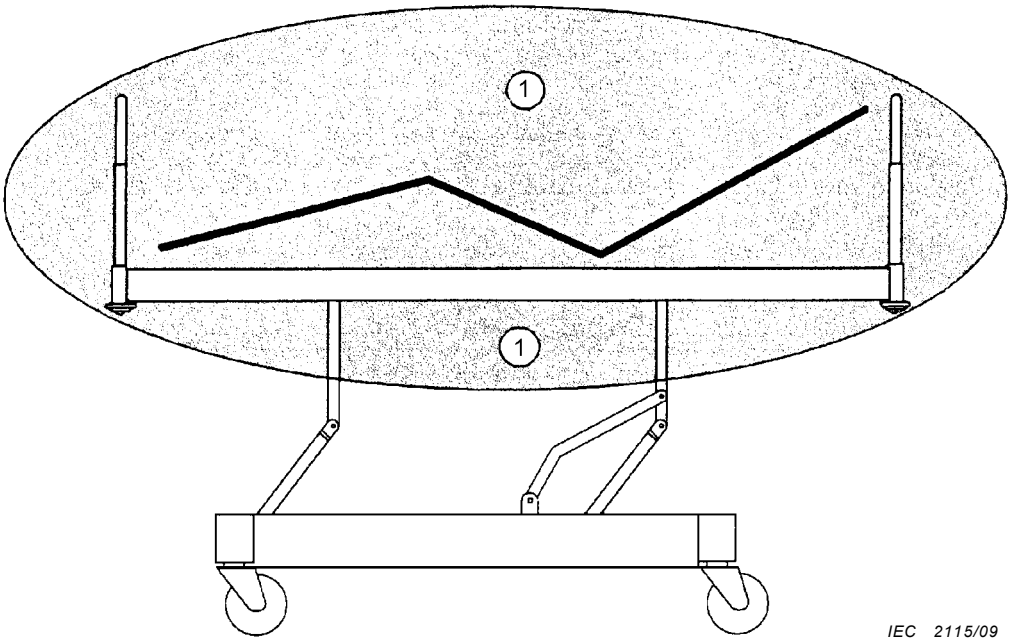

Key

1 Region of APPLIED PART including ACCESSORIES

Figure 201.101 – APPLIED PART

201.3.76
PATIENT

Replacement:

person undergoing a medical procedure or DISABLED PERSON

Documents
Document Sharing Hub
Full document details: 20/30419928 DC

201.3.131
*** TRAPPING ZONE**

Addition:

locations where the body of a MEDICAL BED occupant can become entrapped, entangled, wedged, or stuck in or between parts of the MEDICAL BED, such as the SIDE RAILS, HEAD/FOOT BOARD, MATTRESS SUPPORT PLATFORM or mattress

Addition:

201.3.201
*** APPLICATION ENVIRONMENT 1**
intensive/critical care provided in a hospital where 24 h medical supervision and constant monitoring is required and provision of life support system/equipment used in medical procedures is essential to maintain or improve the vital functions of the PATIENT

201.3.202
*** APPLICATION ENVIRONMENT 2**
acute care provided in a hospital or other medical facility where medical supervision and monitoring is required and ME EQUIPMENT used in medical procedures is often provided to help maintain or improve the condition of the PATIENT

201.3.203
*** APPLICATION ENVIRONMENT 3**
long-term care in a medical area where medical supervision is required and monitoring is provided if necessary and ME EQUIPMENT used in medical procedures may be provided to help maintain or improve the condition of the PATIENT

NOTE This includes use in nursing homes and in rehabilitation and geriatric facilities.

201.3.204
*** APPLICATION ENVIRONMENT 4**
care provided in a domestic area where ME EQUIPMENT is used to alleviate or compensate for an injury, disability or disease

NOTE This excludes use in all other APPLICATION ENVIRONMENTs (e.g. nursing homes, rehabilitation and geriatric facilities) when a MEDICAL BED is purely designed for APPLICATION ENVIRONMENT 4.

201.3.205
*** APPLICATION ENVIRONMENT 5**
outpatient (ambulatory) care, which is provided in a hospital or other medical facility, under medical supervision where ME EQUIPMENT, is provided for the need of persons with illness, injury or disability for treatment, diagnosis or monitoring

201.3.206
*** APPLICATION ENVIRONMENT 6**
Psychiatric (mental health) care enviroment where medical supervision is required, and monitoring is provided. ME EQUIPMENT used in medical procedures may be provided to help maintain, improve condition and protect the PATIENT. Environment when a patient may be a harm to themselves or others.

Comment to National Committees: Please provide any national requirements or hazards related to Psychiatric (mental health / prison) medical beds in national comments. JWG4 is evaluating the need to include Application Environment 6.

AVA Documents
Document Sharing Hub
Full document details: 20/30419928 DC

201.3.207
BED-LIFT
height adjustable mechanism on which a MATTRESS SUPPORT PLATFORM can be mounted

NOTE The combination of a BED LIFT and a compatible non-MEDICAL BED as specified by the MANUFACTURER is considered to be a MEDICAL BED.

201.3.208
CHILD
See definition in IEC 80601-2-89 (EN 50637)

201.3.209
DISABLED PERSON
person with one or more impairments, one or more activity limitations, one or more participation restrictions or a combination thereof

[ISO 9999:2007]

201.3.210
HEAD/FOOT BOARD
assembly/assemblies mounted to MEDICAL BED, which identifies for the PATIENT the edge of the head or foot end of the MEDICAL BED and/or MATTRESS SUPPORT PLATFORM

NOTE It may be used as handles to push a MEDICAL BED intended to transport PATIENTS.

201.3.211
LIFTING POLE
ACCESSORY attached to a MEDICAL BED and intended to assist support of a PATIENT when changing position by providing a gripping support above the PATIENT

201.3.212
MATTRESS OVERLAY
supplementary mattress (support surface), which is intended to be placed on an existing mattress, and generally used for prophylactic or therapeutic effect

201.3.213
MATTRESS SUPPORT PLATFORM
structure which supports a PATIENT surface (for example mattress)

NOTE It can articulate or change positions to facilitate various therapeutic, diagnostic and convenience positions (See Figures 201.102 and 201.119 a) to 201.119 d)).

Documents
Document Sharing Hub
Full document details: 20/30419928 DC

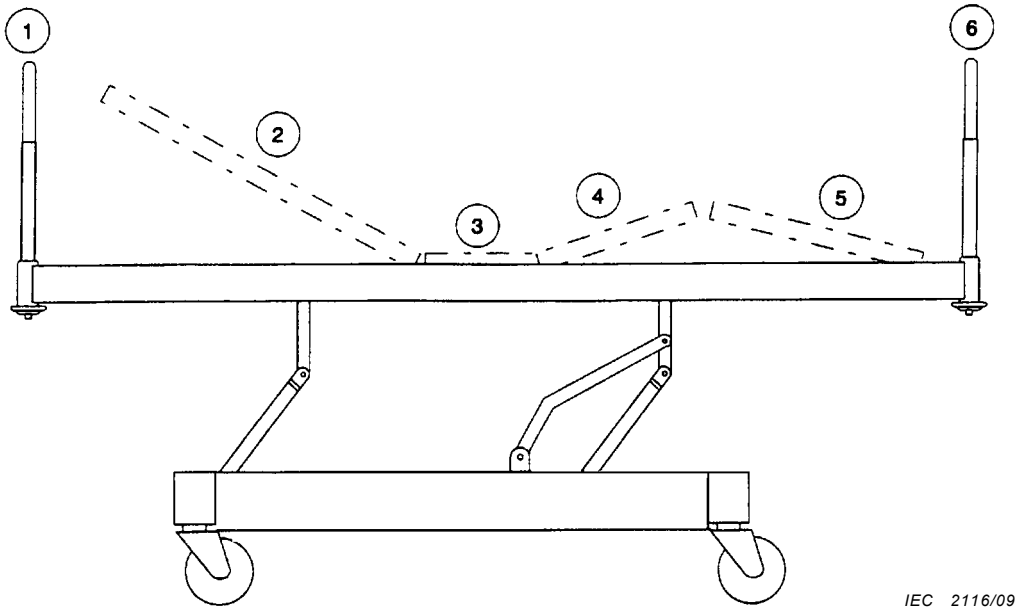

Key

1 HEAD BOARD
2 Back section
3 Seat section
4 Upper leg section
5 Lower leg section
6 FOOT BOARD

Figure 201.102 – MEDICAL BED, general arrangement (example, schematic presentation only)

201.3.214
*** MEDICAL BED**
device for which the INTENDED USE is sleeping/resting that contains a MATTRESS SUPPORT PLATFORM and intended to assist in diagnosis, monitoring, prevention, treatment, alleviation of disease or compensation for an injury or handicap

NOTE 1 A BED-LIFT and/or a detachable MATTRESS SUPPORT PLATFORM in combination with a compatible non-MEDICAL BED as specified by the MANUFACTURER is also considered a MEDICAL BED.

NOTE 2 Excluded are devices for which the INTENDED USE is mainly for examination or transportation under medical supervision (e.g. stretcher, examination table).

201.3.215
MOTION LOCKOUT CONTROL
auxiliary subsystem that deactivates motion controls

201.3.216
PENDANT CONTROL
handheld device, which has a FUNCTIONAL CONNECTION to the MEDICAL BED, controlling at least MEDICAL BED articulations and/or movements

NOTE PENDANT CONTROLS may be wired, or wireless, and may integrate other functions, (e.g. communications, radio/tv, etc.).

201.3.217
SIDE RAIL
physical barrier, which may be a detachable ACCESSORY or integral to the overall construction of a MEDICAL BED and is mounted to the side(s) of the MEDICAL BED

Documents
Document Sharing Hub
Full document details: 20/30419928 DC

NOTE When a SIDE RAIL is located in the "up" position it provides a physical barrier, which is intended to reduce the RISK of the PATIENT accidentally slipping or rolling off the mattress.

201.3.218
SPECIALTY MATTRESS
mattress intended for prophylactic or therapeutic effect

201.3.219
TEST BED BOARD
flat, rigid loading board of dimensions as specified by the MANUFACTURER representing the dimensions of the MEDICAL BED

201.3.220
TRENDELENBURG

A specific therapeutic position used in some medical procedures requiring greater than a 12° head down tilt

Note: other mattress support platform tilt postions are permitted if trendelenburg position is not indicated.

201.3.221
UNDERCARRIAGE
all components of the MEDICAL BED or BED-LIFT below the MATTRESS SUPPORT PLATFORM

201.3.222
*** ADULT**
PATIENT having a physical size equal to or more than 146 cm, a mass equal to or more than 40 kg and a body mass index (BMI) equal to or more than 17 or having a physical size, mass, and body 14 index as defined by the MANUFACTURER'S RISK MANAGEMENT FILE.

201.4 General requirements

Clause 4 of the general standard applies.

201.4.2.2 * General requirement for RISK MANAGEMENT

Addition:

The MANUFACTURER shall include, in the RISK MANAGEMENT PROCESS, HAZARDS related to PATIENTS taller than 185 cm.

Compliance is checked by inspection of the RISK MANAGEMENT FILE.

201.5 General requirements for testing of ME EQUIPMENT

Clause 5 of the general standard applies, except as follows:

Additional subclauses:

201.5.101 * Entrapment test tools

Figures 201.103a and 201.103b illustrate entrapment test tools (a cone tool and a cylinder tool respectively).

Documents
Document Sharing Hub
Full document details: 20/30419928 DC

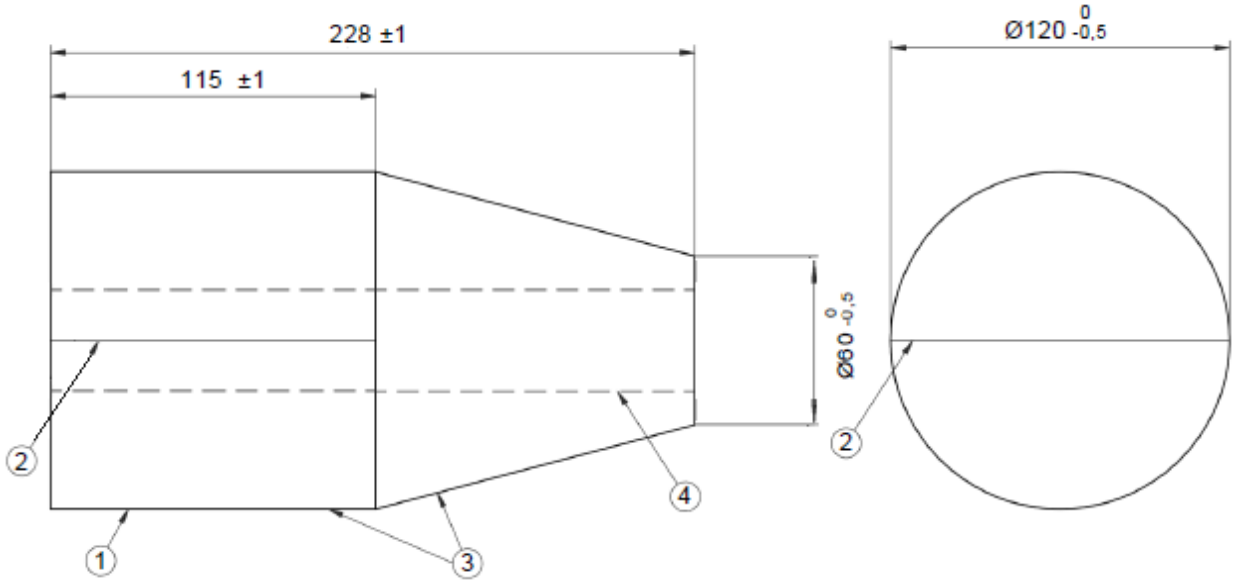

Dimensions in millimetres

Key

1 Total weight 5,1 kg ±0,05 kg

2 Marked centre line

3 Surface roughness 1,6

4 Drilling hole for weight adjustment (reference)

Figure 201.103 a) – Cone tool schematic

Dimensions in millimetres

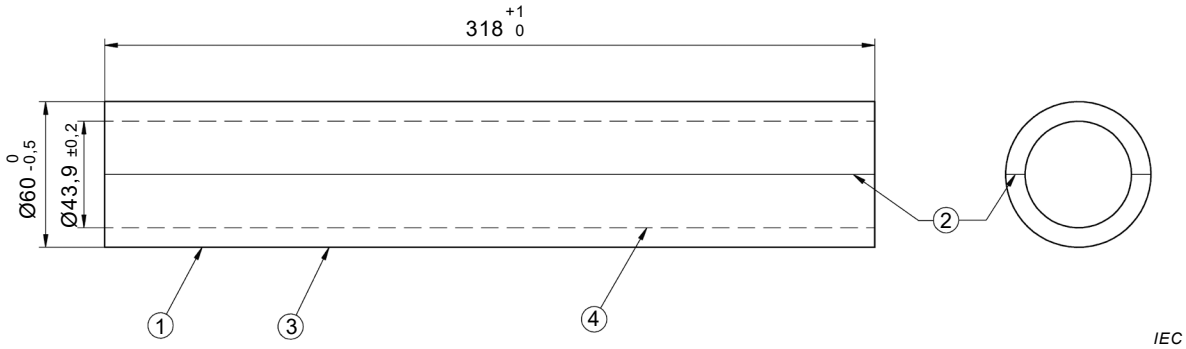

Key

1 Total weight 3,34 kg ±0,05 kg

2 Marked centre line

3 Surface roughness 1,6

4 Drilling hole for weight adjustment (reference)

Figure 201.103 b) – Cylinder tool schematic

Figure 201.103 – Entrapment test tools

Documents
Document Sharing Hub
Full document details: 20/30419928 DC

201.5.102 Loading pad

The loading pad (see Figure 201.104) is a rigid circular object, (355+/–5) mm in diameter, the face of which has a convex spherical curvature of 800 mm radius with a 20 mm front edge radius.

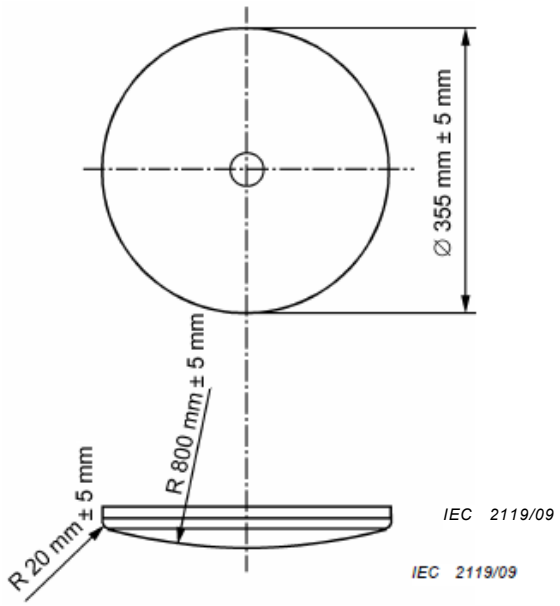

Figure 201.104 – Loading pad

201.6 Classification of ME EQUIPMENT and ME SYSTEMS

Clause 6 of the general standard applies, except as follows:

201.6.2 * Protection against electrical shock

Addition:

For APPLICATION ENVIRONMENT 4, the MEDICAL BED shall be CLASS II.

201.7 ME EQUIPMENT identification, marking and documents

Clause 7 of the general standard applies, except as follows:

201.7.2.2 Identification

Replacement of the first paragraph:

The MEDICAL BED shall be marked with the name or trademark and address of the MANUFACTURER, MODEL OR TYPE REFERENCE and means to allow traceability.

Documents
Document Sharing Hub
Full document details: 20/30419928 DC

The detachable components shall be marked with the name or trademark and address of the MANUFACTURER, MODEL OR TYPE REFERENCE and means to allow traceability unless mis-identification does not present an unacceptable RISK.

Additional subclauses:

201.7.2.2.101 * Marking of maximum PATIENT weight and SAFE WORKING LOAD

a) The MEDICAL BED shall be marked with the corresponding maximum PATIENT weight (see 201.9.8.3.1) and SAFE WORKING LOAD (for symbol see Figure 201.105).

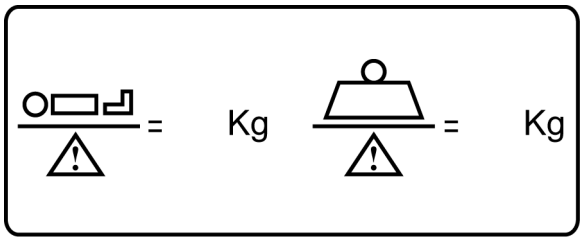

IEC 2120/09

Figure 201.105 – Graphic symbol for maximum PATIENT weight and SAFE WORKING LOAD

b) Detachable parts of a MEDICAL BED of a mass of more than 20 kg shall be marked with symbol ISO 7000-1321 (2004-01): .

201.7.2.2.102 Marking for machine washable MEDICAL BEDS by an automatic washing system

MEDICAL BEDS intended for use with an automatic washing system shall be marked with the following text to distinguish them from MEDICAL BEDS which cannot tolerate such cleaning methods: “Caution, for cleaning purposes this bed can be used with automatic washing systems.” Or be marked with the corresponding symbol (see figure 201.121)

Figure 201.121 – Graphic symbol for machine washable MEDICAL BED201.7.2.2.103 Marking for MEDICAL BEDS intended for jet stream washing

MEDICAL BEDS intended for use with jet stream washing shall be marked with the following text: “Caution, for cleaning purposes this bed can be used with jet stream washing.” Or be marked with the corresponding symbol (see figure 201.122)

Documents
Document Sharing Hub
Full document details: 20/30419928 DC

Figure 201.122 – Graphic symbol for jet stream washable MEDICAL BED

201.7.2.2.104 Width of carriage of BED-LIFT

If a BED-LIFT has an adjustable width carriage, the range shall be marked, e.g. by linear measurement indicator fixed to the adjustable parts.

201.7.2.2.105 * Marking of replacement mattresses

MEDICAL BEDS designed to have replacement mattresses shall be marked with the following sentence as a warning: “Incompatible mattresses can create hazards. Read instructions for use” or a symbol as appropriate on a prominent place on the MATTRESS SUPPORT PLATFORM indicating the compatible mattresses (see example in AA.1).

201.7.2.2.106 * Marking of detachable SIDE RAILS

MEDICAL BEDS designed to have detachable SIDE RAILS shall be marked with the following sentence as a warning: “Incompatible SIDE RAILS can create HAZARDS. Read instructions for use” or use a symbol as appropriate on a prominent place near the attachment point of the SIDE RAIL, indicating the compatible SIDE RAILS (see example in AA.2).

201.7.2.2.107 Marking on the MEDICAL BED for ADULTS

The MEDICAL BEDS shall be marked on a prominent place with the symbol displaying the values for ADULT indicated in Figure 201.106.

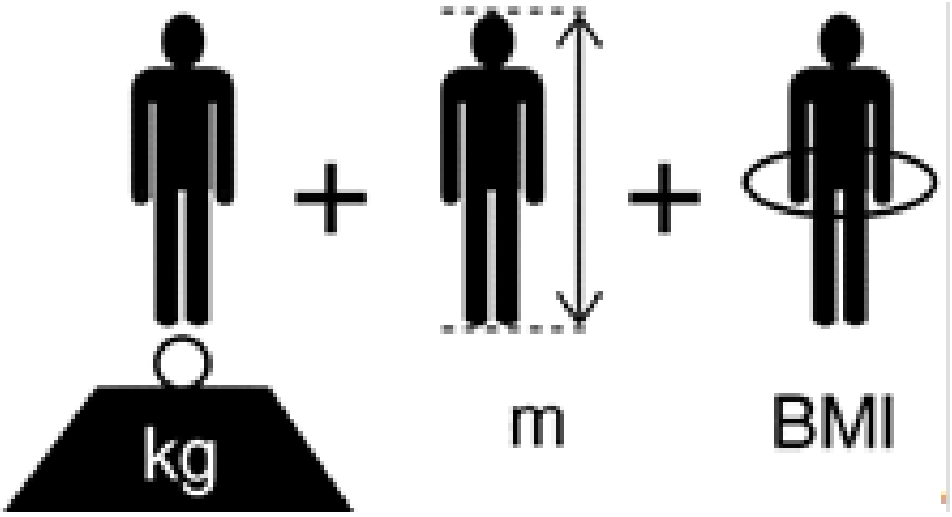

Figure 201.120 – Physical description of an ADULT

201.7.2.4 ACCESSORIES

Addition:

Documents
Document Sharing Hub
Full document details: 20/30419928 DC

Where an overload on an ACCESSORY that is intended to support loads can create an unacceptable RISK, the corresponding SAFE WORKING LOAD shall be marked on the ACCESSORY.

Compliance is checked by inspection.

201.7.4.2 Control devices

Addition:

Where reliance to prevent unintended movement of the MATTRESS SUPPORT PLATFORM is based on a MOTION LOCKOUT CONTROL which requires activation by the OPERATOR, this shall be disclosed by markings or symbols as appropriate on the outside of the MEDICAL BED and which are visible from a position of NORMAL USE (see Figure 201.106).

NOTE Example: "Engage the MOTION LOCKOUT CONTROL if a patient could be injured due to inadvertent motion of the MATTRESS SUPPORT PLATFORM."

Compliance is checked by inspection of the MEDICAL BED.

201.7.6.3 Symbols for controls and performance

Addition:

Controls and/or indicators, when possible, shall be marked using symbols that convey the intended function of those controls or indicators without the need for additional text.

NOTE Figure 201.106 is intended as a guideline when designing these symbols. In all cases where standard international symbols exist, they should be used.

Documents
Document Sharing Hub
Full document details: 20/30419928 DC

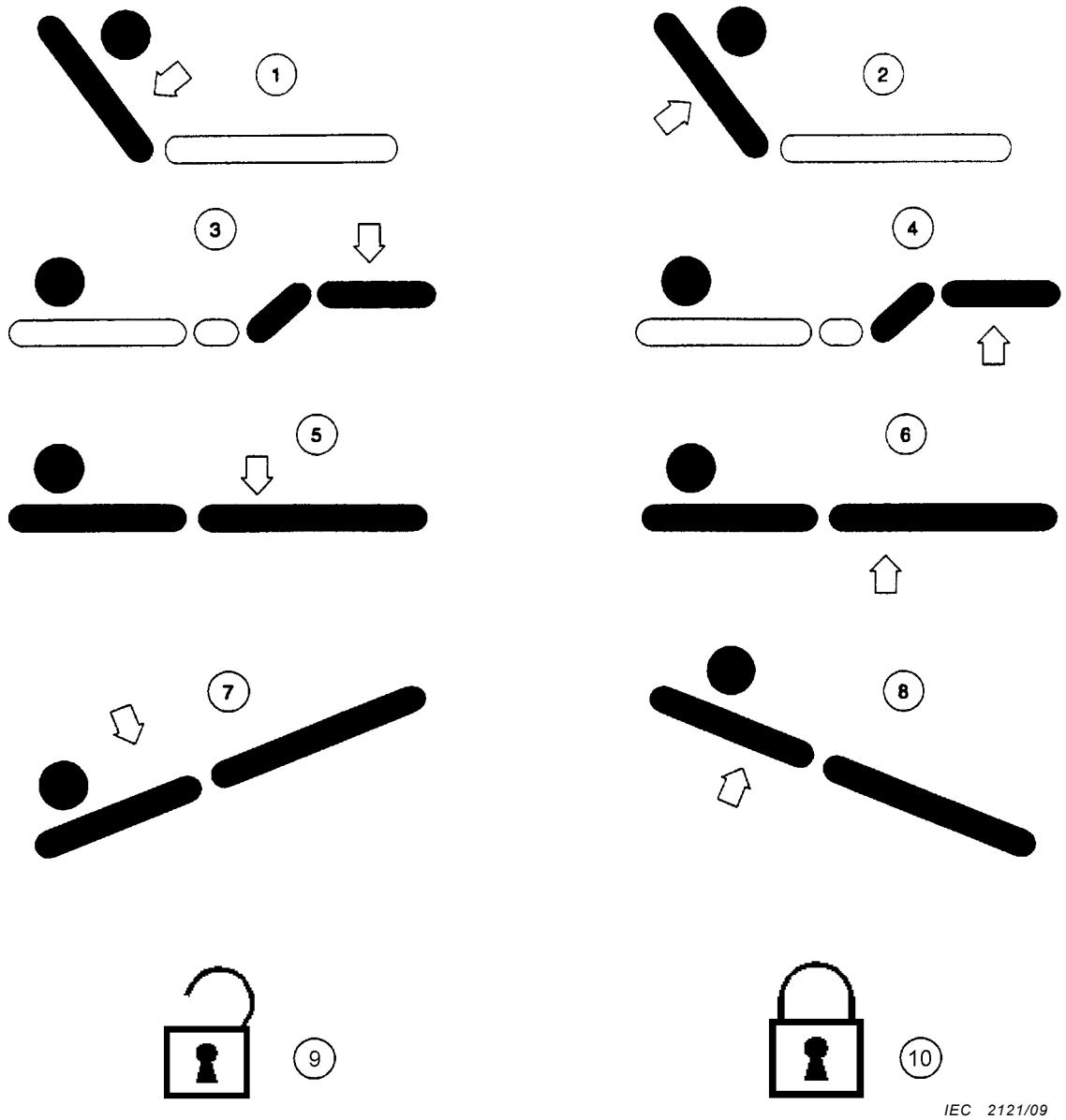

Key

1	Back section down function
2	Back section up function
3	Leg down function
4	Leg up function
5	MATTRESS SUPPORT PLATFORM down
6	MATTRESS SUPPORT PLATFORM up
7	Trendelenburg and/ or head down tilt
8	Anti-Trendelenburg/reverse Trendelenburg and/ or foot down tilt
9	Padlock-symbol (unlocked) for MOTION LOCKOUT CONTROL
10	Padlock-symbol (locked) for MOTION LOCKOUT CONTROL

Figure 201.106 – MEDICAL BED function controls and/or actuators: guidelines for creating graphic symbols

Documents
Document Sharing Hub
Full document details: 20/30419928 DC

201.7.9.2 Instructions for use

201.7.9.2.1 General

Addition:

The instructions for use shall include:

a) a description according to 201.3. of the intended APPLICATION ENVIRONMENT(S);

b) the maximum PATIENT weight and SAFE WORKING LOAD. The SAFE WORKING LOAD is the sum of:

– the PATIENT;

– the mattress;

– the ACCESSORIES of the MEDICAL BED (only if they are supported by the support system of the MEDICAL BED); and

– the load supported by those ACCESSORIES (excluding PATIENT weight);

c) an explanation of how to deactivate any MEDICAL BED function if movement caused by that function could cause injury to the PATIENT;

d) for APPLICATION ENVIRONMENT 4 intended MEDICAL BEDS, the result of the measurement of auditable acoustic energy in accordance with ISO 3746.

e) a description of the intended PATIENT group(s).

201.7.9.2.2 Warning and safety notices

Addition:

a) The instructions for use shall provide a warning that the MEDICAL BED should be left in its lowest position when the PATIENT is unattended in order to reduce RISK of injury due to falls.

b) The instructions for use shall provide a warning on HAZARDS caused by inappropriate handling of the POWER SUPPLY CORD, e. g. by kinking, shearing or other mechanical damages.

c) The instructions for use shall provide a warning, stating that when routing cables from other equipment in the MEDICAL BED, precautions shall be taken to avoid squeezing those between parts of the MEDICAL BED.

d) The instructions for use shall provide a warning if a MEDICAL BED shall only be used with certain hoists, because of the limited space underneath the MEDICAL BED.

e) The instructions for use shall provide a warning if a MEDICAL BED is limited to a specific group of PATIENTS.

f) The instructions for use shall provide a warning that incompatible side rails and mattresses can cause an entrapment hazard

201.7.9.2.5 ME EQUIPMENT description

Addition:

201.7.9.2.5.101 Selection of mattress

The instructions for use shall contain information on the selection of mattress(es), including mattress dimensions and mattress characteristics (e.g. to reduce the RISK of entrapment and falls (see also 201.7.2.2.105)).

AVA Documents
Document Sharing Hub
Full document details: 20/30419928 DC

201.7.9.2.5.102 Selection of SIDE RAILS

The instructions for use shall contain information on the selection of SIDE RAILS, including SIDE RAIL dimensions and SIDE RAIL characteristics (e.g. to reduce the RISK of entrapment and falls (see also 201.7.2.2.106)).

201.7.9.2.5.103 * Angles and height of MEDICAL BED

The instructions for use shall identify the maximum angles, which can be achieved in NORMAL USE by each part of the MATTRESS SUPPORT PLATFORM with reference to horizontal. They shall also identify the maximum and minimum heights from the floor which can be achieved by the MATTRESS SUPPORT PLATFORM in NORMAL USE. They shall also identify any emergency position(s) and the controls by which such position(s) are obtained.

201.7.9.2.5.104 * Maximum mass of MEDICAL BED

The instructions for use shall identify the maximum mass (in kg) of the MEDICAL BED. If the MEDICAL BED is intended to be disassembled into parts, the maximum mass (in kg) of any parts shall be stated in the instructions for use.

201.7.9.2.13 Maintenance

Replacement:

The instruction for use shall instruct the OPERATOR or RESPONSIBLE ORGANIZATION in sufficient detail concerning preventive inspection, maintenance and calibration to be performed by them, including the frequency of such maintenance.

The instruction for use shall provide information for the safe performance of such routine maintenance necessary to ensure the continued safe use of the MEDICAL BED.

Additionally, the instructions for use shall identify the parts on which preventive inspection and maintenance shall be performed by SERVICE PERSONNEL, including the periods to be applied and details about the actual performance of such maintenance.

For MEDICAL BEDS containing rechargeable batteries that are intended to be maintained by anyone other than SERVICE PERSONNEL, the instruction for use shall contain instructions to ensure adequate maintenance.

Additional information regarding periodic inspections can be found in in Annex DD

201.8 Protection against electrical HAZARDS from ME EQUIPMENT

Clause 8 of the general standard applies, except as follows:

201.8.5.2.1 * F-TYPE APPLIED PARTS

Addition:

A type BF applied part shall have no conductive connection to accessible metal parts.

201.8.5.2.2 *TYPE B APPLIED PARTS

This subclause does not apply.

Note: Type B applied parts are allowed for medical beds. This revision only removes this 1 subclause.

AVA Documents
Document Sharing Hub
Full document details: 20/30419928 DC

674

675 **201.8.11.3.2 Types**

676 *Replacement:*

677 POWER SUPPLY CORDS shall be a minimum 2,5 m measured from the plug to the outside
678 perimeter of the MEDICAL BED.

679 POWER SUPPLY CORDS and other external flexible mains cables and cords on MEDICAL BEDS
680 shall be type EN 50525-2-21 H05-BQ-F [1][3)] or equivalent quality for mechanical robustness.

681 POWER SUPPLY CORDS shall be equipped with appropriate strain relief and bend protection.

682 POWER SUPPLY CORD sets shall have a moulded-on plug or other means to withstand the
683 ingress of water during the cleaning PROCESS for which the MEDICAL BED is intended.

684 The MEDICAL BED shall be equipped with a means to keep the POWER SUPPLY CORD clear of any
685 moving MEDICAL BED part or mechanism, when the MEDICAL BED is in use, transport or not in
686 use to avoid a damage of the POWER SUPPLY CORD.

687 POWER SUPPLY CORDS shall be adequately protected against damages from contact with
688 moving part(s) or from friction at sharp corners and edges within the MEDICAL BED.

689 *Compliance is checked by inspection.*

690 **201.9 Protection against MECHANICAL HAZARDS of ME EQUIPMENT and ME SYSTEMS**

691 Clause 9 of the general standard applies, except as follows:

692 **201.9.1 * MECHANICAL HAZARDS of ME EQUIPMENT**

693 *Addition:*

694 **201.9.1.101 * Protection against PATIENT entrapment in non-moving parts**

695 Any openings or areas (A_1, A_2, A_3, A_4, A_5, A_6, B, C and D) within the MEDICAL BED system and
696 which are above the MATTRESS SUPPORT PLATFORM shall meet the dimensional and
697 constructional requirements of Figures 201.107, 201.108 and Table 201.101. Where a RISK of
698 PATIENT entrapment exists and is addressed in another way this shall be justified by the
699 MANUFACTURER in the RISK MANAGEMENT FILE.

700 *Compliance is checked before and after application of the SIDE RAIL strength and latch*
701 *reliability tests (see 201.9.8.3.3.3).*

702 *Compliance is checked with the MATTRESS SUPPORT PLATFORM in the flat and lowest position*
703 *as allowed by design unless otherwise noted as indicated in Table 201.101. The test shall be*
704 *performed with the SIDE RAIL in its raised and locked positions which are not intended to be*
705 *used primarily for patient ingress and / or egress. The instructions for use shall state which*
706 *side rail locking positions are intended to be used primarily for patient ingress and / or egress.*

3) Figures in square brackets refer to the bibliography.

AVA Documents
Document Sharing Hub

Full document details: 20/30419928 DC

Question 1: JWG4 would like specific recommendations from National committees regarding the text in the paragraphs above and below this text box. Please include in your commenting if you would prefer

a) Text not changed (will remain as written in 60601-2-52)
b) Text changed as red lined
c) Text changed with modification, please recommend text

Requirements involving the MATTRESS SUPPORT PLATFORM and mattress are checked with the mattress(es) meeting dimensional and characteristic requirements (i.e. thickness, width, length, ILD) as specified by the MANUFACTURER (see 201.7.9.2.5.101).. Requirements of Figures 201.107, 201.108 and Table 201.101 involving the mattress are excluded for SPECIALTY MATTRESSES.

A RISK ASSESSMENT shall be performed to evaluate:

– SPECIALTY MATTRESSES;
– MATTRESS OVERLAYS;
– ACCESSORIES;
– articulated MATTRESS SUPPORT PLATFORM positions.
– PATIENTS taller than 1.85 m..
– Mattress support platform positions other than lowest

Compliance is checked by the following tests and inspection of the RISK MANAGEMENT FILE.

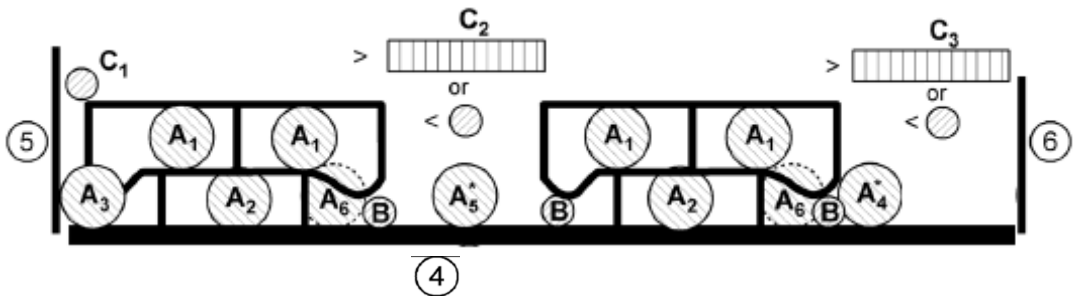

Documents
Document Sharing Hub
Full document details: 20/30419928 DC

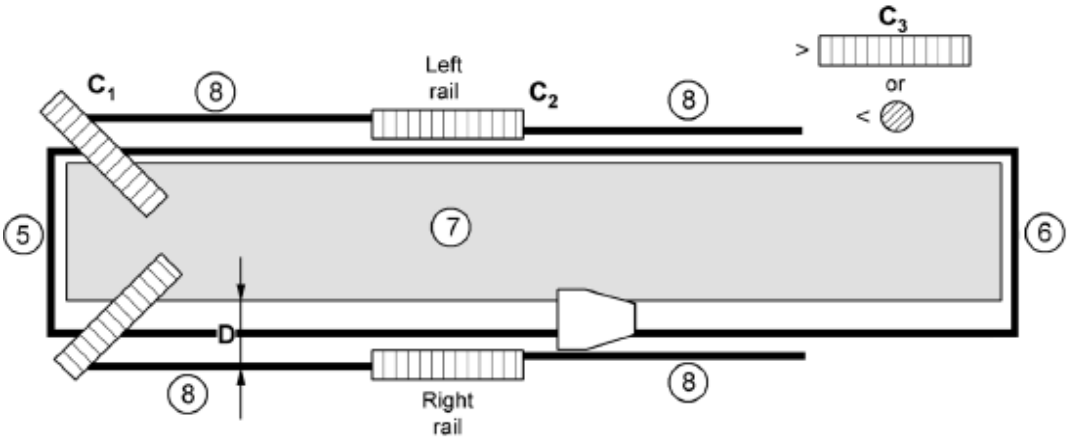

*Only applies when the area C above is <60 mm.

A_x represents the different areas A_1, A_2, A_3, A_4, A_5 and A_6

Key

1 Area of TOOL representing neck diameter (60 mm).

2 Area of TOOL representing chest breadth (318 mm).

3 Area of TOOL representing head breadth (120 mm).

4 MATTRESS SUPPORT PLATFORM

5 HEAD BOARD

6 FOOT BOARD

7 Mattress

8 SIDE RAIL

Figure 201.107 – Example of MEDICAL BED with segmented or split SIDE RAIL

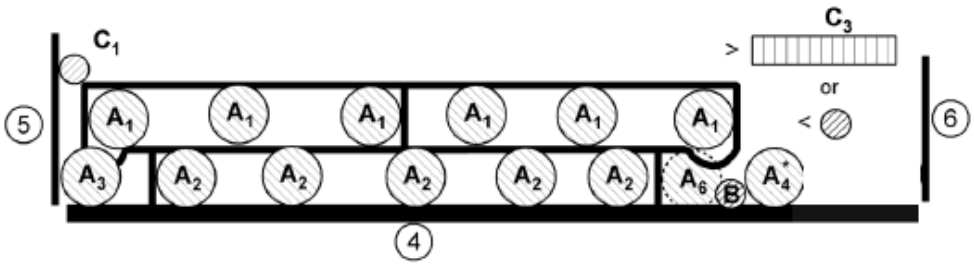

Documents
Document Sharing Hub
Full document details: 20/30419928 DC