**Draft for Public Comment**

Form 36

DPC: 20/30423330 DC

**BSI Group Headquarters**

389 Chiswick High Road London W4 4AL

Tel: +44 (0)20 8996 9000
Fax: +44 (0)20 8996 7400
www.bsigroup.com

Date: 07 July 2020
Origin: International

**Latest date for receipt of comments: 22 July 2020**

Project No. 2020/00036

Responsible committee: EPL/94 General purpose relays and reed contact units

Interested committees:

Title: Draft BS EN IEC 61812-1 Time relays for industrial and residential use. Part 1: Requirements and tests.

Please notify the secretary if you are aware of any keywords that might assist in classifying or identifying the standard or if the content of this standard

i) has any issues related to 3rd party IPR, patent or copyright
ii) affects other national standard(s)
iii) requires additional national guidance or information

**WARNING: THIS IS A DRAFT AND MUST NOT BE REGARDED OR USED AS A BRITISH STANDARD. THIS DRAFT IS NOT CURRENT BEYOND 22 July 2020**

This draft is issued to allow comments from interested parties; all comments will be given consideration prior to publication. No acknowledgement will normally be sent. **See overleaf for information on the submission of comments.**

No copying is allowed, in any form, without prior written permission from BSI except as permitted under the Copyright, Designs and Patent Act 1988 or for circulation within a nominating organization for briefing purposes. Electronic circulation is limited to dissemination by e-mail within such an organization by committee members.

Further copies of this draft may be purchased from BSI Shop http://shop.bsigroup.com or from BSI Customer Services, Tel: +44(0) 20 8996 9001 or email cservices@bsigroup.com. British, International and foreign standards are also available from BSI Customer Services.

Information on the co-operating organizations represented on the committees referenced above may be obtained from https://standardsdevelopment.bsigroup.com/.

Responsible Committee Secretary: Committee Service Centre (BSI)
Direct tel: 020 8996 7009
E-mail: csc@bsigroup.com

Documents
Document Sharing Hub
Full document details: 20/30423330 DC

**Introduction**

This draft standard is based on national and international discussions. Your comments on this draft are invited and will assist in the preparation of the consequent standard.

For international standards, comments will be reviewed by the relevant UK national committee before sending the consensus UK vote and comments to the international committee, which will then decide appropriate action. If the international standard is approved, it is usual for the text to be published as a British Standard.

For national standards, comments will be reviewed by the relevant UK national committee and the resulting standards published as a British Standard.

**UK Vote**

Please indicate whether you consider the UK should submit a negative (with supporting technical reasons) or positive vote on this draft. Please indicate if you are aware of any reason why this draft standard should not be published as a British Standard.

**Submission of Comments**

- **Annotated drafts are not acceptable and will be rejected.**
- All comments should be submitted online at **https://standardsdevelopment.bsigroup.com/**. You will need to register in order to comment.

**Template for comments and secretariat observations**

| Date: xx/xx/20xx | Document: ISO/DIS xxxx |
|---|---|

| 1 | 2 | (3) | 4 | 5 | (6) | 7 |
|---|---|---|---|---|---|---|
| **MB** | Clause No./ Subclause No./Annex **(e.g. 3.1)** | Paragraph/Figure/ Table/Note | **Type of comment** | **Commend (justification for change) by the MB** | **Proposed change by the MB** | **Secretariat observations on each comment submitted** |
| | 3.1 | Definition 1 | ed | Definition is ambiguous and needs clarifying. | Amend to read '...so that the mains connector to which no connection...' | |
| | 6.4 | Paragraph 2 | te | The use of the UV photometer as an alternative cannot be supported as serious problems have been encountered in its use in the UK. | Delete reference to UV photometer. | |

Documents
Document Sharing Hub

Full document details: 20/30423330 DC

# 94/471/CD

COMMITTEE DRAFT (CD)

| PROJECT NUMBER: | |
|---|---|
| **IEC 61812-1 ED3** | |
| DATE OF CIRCULATION: **2020-01-31** | CLOSING DATE FOR COMMENTS: **2020-04-24** |
| SUPERSEDES DOCUMENTS: **94/468/RR** | |

| IEC TC 94 : ALL-OR-NOTHING ELECTRICAL RELAYS | |
|---|---|
| SECRETARIAT: Austria | SECRETARY: Mr Bernhard Spalt |
| OF INTEREST TO THE FOLLOWING COMMITTEES: | PROPOSED HORIZONTAL STANDARD: ☐ <br> Other TC/SCs are requested to indicate their interest, if any, in this CD to the secretary. |
| FUNCTIONS CONCERNED: ☐ EMC ☐ ENVIRONMENT ☐ QUALITY ASSURANCE ☐ SAFETY | |

This document is still under study and subject to change. It should not be used for reference purposes.

Recipients of this document are invited to submit, with their comments, notification of any relevant patent rights of which they are aware and to provide supporting documentation.

TITLE:

**Time relays for industrial and residential use - Part 1: Requirements and tests**

NOTE FROM TC/SC OFFICERS:

**Copyright © 2020 International Electrotechnical Commission, IEC**. All rights reserved. It is permitted to download this electronic file, to make a copy and to print out the content for the sole purpose of preparing National Committee positions. You may not copy or "mirror" the file or printed version of the document, or any part of it, for any other purpose without permission in writing from IEC.

AVA Documents Document Sharing Hub

Full document details: 20/30423330 DC

Documents
Document Sharing Hub

CONTENTS

FOREWORD ..... 6
1 Scope ..... 8
2 Normative references ..... 8
3 Terms and definitions ..... 10
3.1 Terms and definitions related to general terms ..... 10
3.2 Terms and definitions of time relay types ..... **Error! Bookmark not defined.**
4 Influence quantities ..... 13
5 Rated values ..... 12
5.1 General ..... 12
5.2 Input voltage and frequency ..... 14
5.3 Release voltage ..... 13
5.4 Power consumption ..... 13
5.5 Output circuit ..... 13
5.5.1 Electromechanical output circuit ..... 13
5.5.2 Mechanical endurance ..... 15
5.5.3 Solid state output circuit ..... 15
5.5.4 Endurance and operating frequency ..... 14
5.5.5 Conditional short circuit current ..... 14
5.6 Ambient temperature ..... 16
5.7 Transport and storage temperature ..... 16
5.8 Humidity ..... 16
5.9 Pollution degree ..... 15
5.10 Altitude ..... 15
5.11 Timing circuit function ..... 15
5.11.1 General ..... 15
5.11.2 Setting accuracy ..... 17
5.11.3 Repeatability ..... 17
5.11.4 Recovery time and minimum control impulse ..... 17
6 Provisions for testing ..... 16
6.1 Type test ..... 16
6.2 Routine test ..... 17
6.3 Sampling test ..... 17
7 Documentation and marking ..... 18
7.1 Data ..... 18
7.2 Marking ..... 21
8 Heating ..... 22
8.1 General ..... 22
8.2 Test conditions ..... 22
8.3 Heating of terminals ..... 22
8.3.1 General ..... 22
8.3.2 Heating of screw terminals and screwless terminals ..... 23
8.3.3 Heating of quick-connect terminations ..... 24
8.3.4 Heating of sockets ..... 24
8.3.5 Heating of alternative termination types ..... 25
8.4 Heating of accessible parts ..... 25

AVA Documents
Document Sharing Hub
Full document details: 20/30423330 DC

8.5 Heating of insulating materials ... 25
9 Basic operating function ... 25
9.1 General ... 25
9.2 Operate ... 25
9.3 Release ... 26
9.4 Time function ... 26
9.4.1 Functional test at reference values of input quantities ... 26
9.4.2 Influencing effects of voltage and temperature ... 26
10 Insulation ... 26
10.1 General ... 26
10.2 Preconditioning ... 27
10.3 Dielectric strength ... 27
10.3.1 General ... 27
10.3.2 Impulse withstand test ... 27
10.3.3 Dielectric a.c. power frequency voltage test ... 28
10.4 Protection against direct contact ... 29
11 Electrical endurance ... 29
11.1 General ... 29
11.2 Resistive loads, inductive loads, and special loads ... 30
11.3 Low energy loads ... 30
12 Conditional short-circuit current ... 30
12.1 General ... 30
12.2 Test procedure ... 30
12.3 Test circuit electromechanical output circuit ... 30
12.4 Test circuit solid state output circuit ... 31
12.5 Condition of switching element after test ... 32
13 Clearances and creepage distances ... 32
13.1 General ... 32
13.2 Creepage distances ... 33
13.3 Clearances ... 34
13.4 Measurement of creepage distances and clearances ... 35
14 Mechanical strength ... 35
14.1 General ... 35
14.2 Mechanical strength of terminals and current-carrying parts ... 36
14.2.1 General ... 36
14.2.2 Mechanical strength of screw terminals and screwless terminals ... 36
14.2.3 Mechanical strength of flat quick-connect terminations ... 36
14.2.4 Mechanical strength of sockets ... 36
14.2.5 Mechanical strength of alternative termination types ... 36
15 Heat and fire resistance ... 36
16 Vibration and shock ... 37
16.1 Vibration ... 37
16.2 Shock ... 37
17 Electromagnetic compatibility (EMC) ... 38
17.1 General ... 38
17.2 EMC immunity ... 38
17.3 EMC radiated and conducted emission ... 39
18 Cybersecurity for industrial automation and control systems (IACS) ... 41

AVA Documents
Document Sharing Hub
Full document details: 20/30423330 DC

95 19 Environmentally conscious design (ECD) ..... 52
96 Annex A (informative) Ball pressure test ..... 40
97 Annex B (normative) Routine test ..... 41
98 Annex C (informative) Risk assessment ..... 42
99 Annex D (informative) Terms and definitions of time relay types ..... 47
100 Bibliography ..... 60
101
102 Figure 1 – Definition of ports ..... 12
103 Figure 2 – Test circuit electromechanical output, conditional short-circuit current ..... 29
104 Figure 3 – Test circuit solid state output, conditional short-circuit current ..... 3032
105 Figure D.1 – Power on-delay relay ..... 47
106 Figure D.2 – Power off-delay relay ..... 47
107 Figure D.3 – Off-delay relay with control signal ..... 48
108 Figure D.4 – On- and off-delay relay with control signal ..... 48
109 Figure D.5 – Flasher relay ..... 48
110 Figure D.8 – Star-delta relay ..... 49
111 Figure D.9 – Summation time relay ..... 49
112 Figure D.10 – Pulse delayed relay ..... 50
113 Figure D.11 – Pulse delayed relay with control signal ..... 50
114 Figure D.12 – Interval relay ..... 50
115 Figure D.13 – Interval relay with control signal ..... 51
116 Figure D.14 – Retriggerable interval relay with control signal on ..... 51
117 Figure D.15 – Retriggerable interval relay with control signal off ..... 52
118 Figure D.16 – Maintained time relay ..... 52
119 Figure D.17 – Pulse sequence monitoring edge triggered time relay ..... 55
120 Figure D.18 – Pulse sequence monitoring edge triggered with on state time relay ..... 55
121 Figure D.19 – Maintained single shot trailing edge time relay ..... 55
122 Figure D.20 – Maintained single shot leading and trailing edge time relay ..... 55
123
124 Table 1 – Influence quantities and reference values ..... 13
125 Table 2 – Preferred values of endurance ..... 15
126 Table 3 – Preferred values of maximum permissible operating frequency ..... 15
127 Table 4 – Recommended final values of the setting range ..... 17
128 Table 5 – Type testing ..... 18
129 Table 6 – Required relay information ..... 19
130 Table 7 – Areas and lengths of conductors dependent on the current carried by the
131 terminal ..... 24
132 Table 8 – Maximum steady state current dependent on the connector size ..... 23
133 Table 9 – Temperature rise limits of accessible parts ..... 25
134 Table 10 – Changing of influencing quantities ..... 26
135 Table 11 – Impulse test for basic insulation ..... 28
136 Table 12 – Dielectric test voltage for devices suitable for use in single-phase three or
137 two-wire AC and DC systems ..... 28

AVA Documents
Document Sharing Hub

Full document details: 20/30423330 DC

Table 13 – Dielectric test voltage for devices suitable for use in three-phase four or three-wire a.c. systems ..... 29
Table 14 – Minimum creepage distances for basic insulation ..... 34
Table 15 – Minimum clearances for basic insulation ..... 35
Table 16 – Minimum clearances in controlled overvoltage conditions for internal circuits ..... 35
Table 17 – Environmental conditions influencing EMC ..... 38
Table 18 – Immunity tests for industrial environments ..... 39
Table 19 – Immunity tests for residential, commercial and light-industrial environments ..... 40

Documents
Document Sharing Hub
Full document details: 20/30423330 DC

INTERNATIONAL ELECTROTECHNICAL COMMISSION

# TIME RELAYS FOR INDUSTRIAL AND RESIDENTIAL USE –

## Part 1: Requirements and tests

## FOREWORD

1) The International Electrotechnical Commission (IEC) is a worldwide organization for standardization comprising all national electrotechnical committees (IEC National Committees). The object of IEC is to promote international co-operation on all questions concerning standardization in the electrical and electronic fields. To this end and in addition to other activities, IEC publishes International Standards, Technical Specifications, Technical Reports, Publicly Available Specifications (PAS) and Guides (hereafter referred to as "IEC Publication(s)"). Their preparation is entrusted to technical committees; any IEC National Committee interested in the subject dealt with may participate in this preparatory work. International, governmental and non-governmental organizations liaising with the IEC also participate in this preparation. IEC collaborates closely with the International Organization for Standardization (ISO) in accordance with conditions determined by agreement between the two organizations.

2) The formal decisions or agreements of IEC on technical matters express, as nearly as possible, an international consensus of opinion on the relevant subjects since each technical committee has representation from all interested IEC National Committees.

3) IEC Publications have the form of recommendations for international use and are accepted by IEC National Committees in that sense. While all reasonable efforts are made to ensure that the technical content of IEC Publications is accurate, IEC cannot be held responsible for the way in which they are used or for any misinterpretation by any end user.

4) In order to promote international uniformity, IEC National Committees undertake to apply IEC Publications transparently to the maximum extent possible in their national and regional publications. Any divergence between any IEC Publication and the corresponding national or regional publication shall be clearly indicated in the latter.

5) IEC itself does not provide any attestation of conformity. Independent certification bodies provide conformity assessment services and, in some areas, access to IEC marks of conformity. IEC is not responsible for any services carried out by independent certification bodies.

6) All users should ensure that they have the latest edition of this publication.

7) No liability shall attach to IEC or its directors, employees, servants or agents including individual experts and members of its technical committees and IEC National Committees for any personal injury, property damage or other damage of any nature whatsoever, whether direct or indirect, or for costs (including legal fees) and expenses arising out of the publication, use of, or reliance upon, this IEC Publication or any other IEC Publications.

8) Attention is drawn to the Normative references cited in this publication. Use of the referenced publications is indispensable for the correct application of this publication.

9) Attention is drawn to the possibility that some of the elements of this IEC Publication may be the subject of patent rights. IEC shall not be held responsible for identifying any or all such patent rights.

International Standard IEC 61812-1 has been prepared by IEC technical committee 94: All-or-nothing electrical relays.

This second edition cancels and replaces the first edition published in 1996. This edition constitutes a technical revision.

This edition includes the following significant technical changes with respect to the previous edition:

– update of references;
– addition of requirements for risk assessment;
– addition of requirements for routine test;
– renumbering of clauses to bring them into a more logical order;
– clarification of the requirement for shock;
– addition of cybersecurity requirement for industrial automation and control systems; (Input will be provided from FR)

AVA Documents
Document Sharing Hub

– addition of environmentally conscious design requirement; (Input will be provided from FR)
– addition of common data dictionary reference; (Input will be provided from FR)
– addition of terms and definitions of relay types

The text of this document is based on the following documents:

| FDIS | Report on voting |
|---|---|
| | |

Full information on the voting for the approval of this International Standard can be found in the report on voting indicated in the above table.

This document has been drafted in accordance with the ISO/IEC Directives, Part 2.

A list of all parts of the IEC 61812 series can be found, under the general title *Time relays for industrial and residential use*, on the IEC website.

The committee has decided that the contents of this document will remain unchanged until the stability date indicated on the IEC web site under "http://webstore.iec.ch" in the data related to the specific document. At this date, the document will be

- reconfirmed,
- withdrawn,
- replaced by a revised edition, or
- amended.

Documents
Document Sharing Hub

Full document details: 20/30423330 DC

# TIME RELAYS FOR INDUSTRIAL AND RESIDENTIAL USE –

## Part 1: Requirements and tests

## 1 Scope

This part of the IEC 61812 applies to time relays for industrial applications (e.g. control, automation, signal and industrial equipment) and for automatic electrical controls for use in, on, or in association with equipment for residential and similar use.

The term “relay” as used in this document comprises all types of relays with specified time functions, other than measuring relays.

This document defines type test and routine test to confirm the service condition.

NOTE Depending on the field of application of these relays (for example automatic electrical controls for household and similar use, switches for household and similar fixed electrical installations, and industrial control systems), further standards may be applicable, for example IEC 60730-2-7 or IEC 60669-2-3.

## 2 Normative references

The following referenced documents are indispensable for the application of this document. For dated references, only the edition cited applies. For undated references, the latest edition of the referenced document (including any amendments) applies.

IEC 60050-444:2002, *International Electrotechnical Vocabulary – Part 444: Elementary relays*

IEC 60050-445:2010, *International Electrotechnical Vocabulary – Part 445: Time relays*

IEC 60068 (all parts), *Environmental testing*

IEC 60068-2-2:2007, *Environmental testing – Part 2-2: Tests – Test B: Dry heat*

IEC 60068-2-6:2007, *Environmental testing – Part 2-6: Tests – Test Fc: Vibration (sinusoidal)*

IEC 60068-2-27:2008, *Environmental testing – Part 2-27: Tests – Test Ea and guidance: Shock*

IEC 60085:2007, *Electrical insulation – Thermal evaluation and designation*

IEC 60112:2003+AMD1:2009, *Method for the determination of the proof and the comparative tracking indices of solid insulating materials*

IEC 60529:1989 +AMD1:1999+AMD2:2013, *Degrees of protection provided by enclosures (IP Code)*

IEC 60664 (all parts), *Insulation coordination for equipment within low-voltage systems*

IEC 60664-1:2007, *Insulation coordination for equipment within low-voltage systems – Part 1: Principles, requirements and tests*

Documents
Document Sharing Hub
Full document details: 20/30423330 DC

IEC 60664-3:2016, *Insulation coordination for equipment within low-voltage systems – Part 3: Use of coating, potting or moulding for protection against pollution*

IEC 60695-2-11:2014, *Fire hazard testing – Part 2-11: Glowing/hot-wire based test methods – Glow-wire flammability test method for end-products*

IEC 60695-10-2:2014, *Fire hazard testing – Part 10-2: Abnormal heat – Ball pressure test*

IEC 60947-5-4:2002, *Low-voltage switchgear and controlgear – Part 5-4: Control circuit devices and switching elements – Method of assessing the performance of low-energy contacts – Special tests*

IEC 60999-1:1999, *Connecting devices – Electrical copper conductors – Safety requirements for screw-type and screwless-type clamping units – Part 1: General requirements and particular requirements for clamping units for conductors from 0,2 mm$^2$ up to 35 mm$^2$ (included)*

IEC 61000-4-2:2008, *Electromagnetic compatibility (EMC) – Part 4-2: Testing and measurement techniques – Electrostatic discharge immunity test*

IEC 61000-4-3:2006, *Electromagnetic compatibility (EMC) – Part 4-3: Testing and measurement techniques – Radiated, radio-frequency, electromagnetic field immunity test*

IEC 61000-4-4:2012, *Electromagnetic compatibility (EMC) – Part 4-4: Testing and measurement techniques – Electrical fast transient/burst immunity test*

IEC 61000-4-5:2014+AMD1:2017, *Electromagnetic compatibility (EMC) – Part 4-5: Testing and measurement techniques – Surge immunity test*

IEC 61000-4-6:2008, *Electromagnetic compatibility (EMC) – Part 4-6: Testing and measurement techniques – Immunity to conducted disturbances, induced by radio-frequency fields*

IEC 61000-4-8:2009, *Electromagnetic compatibility (EMC) – Part 4-8: Testing and measurement techniques – Power frequency magnetic field immunity test*

IEC 61000-4-11:2004+AMD1:2017, *Electromagnetic compatibility (EMC) – Part 4-11: Testing and measurement techniques – Voltage dips, short interruptions and voltage variations immunity tests*

IEC 61210:2010, *Connecting devices – Flat quick-connect terminations for electrical copper conductors – Safety requirements*

IEC 61810-1:2015, *Electromechanical elementary relays – Part 1: General requirements*

IEC 61984:2008, *Connectors – Safety requirements and tests*

IEC 62314:2006, *Solid-state relays*

CISPR 11:2015+AMD1:2016+AMD2:2019, *Industrial, scientific and medical equipment – Radio-frequency disturbance characteristics – Limits and methods of measurement*
Amendment 1 (2010)

Documents
Document Sharing Hub

Full document details: 20/30423330 DC

CISPR 32:2015+AMD1:2019, *Electromagnetic compatibility of multimedia equipment – Emission requirements*

# 3 Terms and definitions

For the purposes of this document, the terms and definitions given in IEC 60050-444 and IEC 60050-445, as well as the following apply.

NOTE Terms having the same or nearly the same meaning are printed in boldface on separate lines and can be used as an alternative.

## 3.1 Terms and definitions related to general terms

**3.1.1**
**time relay**
**specified-time relay**
all-or-nothing relay (IEC 60050-444:2002, 444-01-02) with one or more time functions

[IEC 60050-445:2010, 445-01-01 modified]

**3.1.2**
**specified time**
specified characteristic of a time relay at given type of function, e.g. operate time, release time, pulse on time, interval time

[IEC 60050-445:2010, 445-05-01]

**3.1.3**
**setting accuracy**
difference between the measured value of the specified time and the reference value set on the scale

NOTE For analogue setting this value relates to the maximum setting value.

[IEC 60050-445:2010, 445-06-07]

**3.1.4**
**effect of influence** (on specified time)
degree with which the influence quantity within its nominal range has an effect on the specified time

[IEC 60050-445:2010, 445-06-02]

**3.1.5**
**recovery time**
minimum time interval for which the power supply is removed or control signal is applied or removed before the specified function can be performed again

[IEC 60050-445:2010, 445-05-04]

**3.1.6**
**minimum control impulse time**
shortest duration of the power supply or control signal to fulfil the specified function

[IEC 60050-445:2010, 445-05-02]

**3.1.7**
**repeatability**
difference between the upper and lower limits of the specified confidence range determined from several time measurements of a time relay under identical conditions

Documents
Document Sharing Hub
Full document details: 20/30423330 DC

NOTE Preferably the repeatability is indicated as a percentage of the mean value of all measured values.

[IEC 60050-445:2010, 445-06-08]

**3.1.8**
**power supply**
**energizing quantity**
electrical quantity (e.g. electric current, voltage) which has to be applied or removed from the input circuit of the time relay in order to enable it to fulfil its purpose

[IEC 60050-445:2010, 445-03-01]

**3.1.9**
**input voltage**
**input current**
electrical quantity that can be applied (or removed) to the power supply and to the control signal

**3.1.10**
**control signal**
trigger signal (deprecated)
input signal which has to be applied or removed in addition to the power supply in order to ensure a function of the time relay

NOTE The control signal is provided by a separate device designed to close or open an electrical circuit.

[IEC 60050-445:2010, 445-02-05]

**3.1.11**
**conditional short-circuit current of an output circuit**
prospective electric current that a contact circuit, protected by a specified short-circuit protective device, can satisfactorily withstand for the total breaking time of that protective device under specified conditions of use and behaviour

[IEC 60050-445:2010, 445-04-03]

**3.1.12**
**on-state voltage drop of a solid-state output circuit**
voltage drop of a solid-state output circuit
voltage measured across the effectively conducting solid-state output of a time relay, when carrying the given load current

[IEC 60050-445:2010, 445-04-04 modified]

**3.1.13**
**leakage current of a solid-state output**
off-state current of a solid-state output
electric current which flows through the effectively non-conducting solid-state output of a time relay at a specified voltage

[IEC 60050-445:2010, 445-04-05 modified]

**3.1.14**
**power port**
port at which the supply voltage (either AC. or DC) is connected to the time relay

[IEC 60050-445:2010, 445-07-01 modified]

Documents
Document Sharing Hub
Full document details: 20/30423330 DC

**3.1.15**
**control port**
additional port for the starting of functions whilst supply voltage is applied, or for the connection of a remote potentiometer, control signal, etc.

NOTE There are control ports for floating (potential-free) and non-floating control.

[IEC 60050-445:2010, 445-07-02]

**3.1.16**
**output port**
port at which a load is connected to the time relay

NOTE The output port could consist of electromechanical contacts or be a solid-state output.

[IEC 60050-445:2010, 445-07-03]

**3.1.17**
**enclosure port**
physical boundary of the time relay through which electromagnetic fields can radiate or impinge

[IEC 60050-445:2010, 445-07-04]

NOTE See Figure 1.

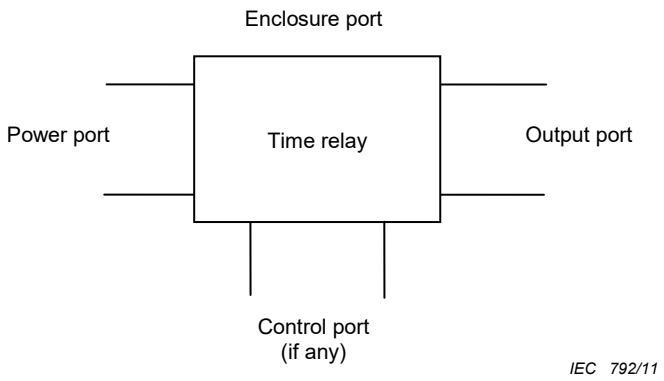


**Figure 1 – Definition of ports**

**3.1.18**
**type test**
test of one or more devices made to a certain design to show that the design meets certain specifications

[IEC 61810-1:2015, 3.1.7]

**3.1.19**
**routine test**
test to which each individual device is subjected during and/or after manufacture to ascertain whether it complies with certain criteria

[IEC 61810-1:2015, 3.1.8]

**3.1.20**
**sampling test**
test on a number of devices taken at random from a batch

Documents
Document Sharing Hub
Full document details: 20/30423330 DC

[IEC 61810-1:2015, 3.1.9]

### 3.2 Terms and definitions of relay types

See Annex D.

## 4 Influence quantities

The specified performance of a time relay shall be given with respect to the reference conditions, i.e. the set of reference values of all influence quantities.

The values and tolerance ranges listed in Table 1 apply unless otherwise explicitly stated by the manufacturer.

**Table 1 – Influence quantities and reference values**

| Influence quantities | Reference values for tests | Tolerances during tests |
|---|---|---|
| Ambient temperature | 23 °C | 18 °C to 28 °C |
| Air pressure | 96 kPa | 86 kPa to 106 kPa |
| Relative humidity | 50 % | 25 % to 75 % |
| Mounting direction | As indicated by the manufacturer | 2° in any direction |
| Input voltage | Rated value(s) | ± 5 % for steady-state conditions [a] |
| Output circuit (voltage/current) | Rated value(s) | ± 5 % for steady-state conditions |
| Frequency | As indicated by the manufacturer | ± 1 % |
| Waveform | Sinusoidal | Maximum distortion factor 5 % [b] |
| Direct component in AC | As indicated by input voltage | Max. 2 % of peak value |
| Alternating component in DC (ripple) | As indicated by input voltage | Maximum 6 % [c] |
| Shock and vibration | As indicated by the manufacturer | Maximum 1 m/s² |
| Industrial and other atmospheres | Clean air | Clean air (pollution not exceeding class 3C2 of IEC 60721-3-3) |

[a] In so far as they are regarded as influencing quantities in the case of time errors tolerance to be ± 1 %.

[b] Distortion factor: ratio of the harmonic content obtained by subtracting the fundamental wave from a non-sinusoidal harmonic quantity and the RMS. value of the non-sinusoidal quantity. It is usually expressed as a percentage.

[c] The alternating component (ripple content) of a DC supply, expressed as a percentage, is defined as follows:

$$\frac{\text{Maximum value} - \text{mimimum value}}{\text{DC component}} \times 100$$

Documents
Document Sharing Hub
Full document details: 20/30423330 DC

# 5 Rated values

## 5.1 General

The numerical values given in this document are either recommended standard values or typical practical values for electronic and electromechanical time relays at the known state of the art. The corresponding actual values for any specific product should be confirmed by the manufacturer as complying with this document or quoted explicitly if they deviate from this document.

## 5.2 Input voltage and frequency

a) The recommended AC rated input voltage RMS is to be specified according to one of the following values:

   12 V; 20 V; 24 V; 48 V; 100 V; 110 V; 115 V; 120 V; 127 V; 200 V; 208 V; 220 V; 230 V; 240 V; 277 V; 400 V; 415 V; 480 V.

b) The recommended DC rated input voltage is to be specified according to one of the following values:

   5 V; 12 V; 20 V; 24 V; 48 V; 60 V; 100 V; 110 V; 125 V; 220 V; 240 V; 250 V; 360 V.

c) Rated frequency, recommended values: 50 Hz, 60 Hz, 400 Hz.

d) Rated input voltage range (for example 220 V to 240 V) and corresponding frequencies (for example 50 Hz/60 Hz) shall be specified by the manufacturer.

e) The recommended operative range is to be specified one of the following values:

   - 80 % to 110 % or
   - 85 % to 110 % or
   - 90 % to 110 % of input voltage.

The above values apply over the full ambient temperature range shall be specified by the manufacturer.

Where the manufacturer deviates from the recommended range, both the rated input voltage (or range) and the corresponding operative range shall be specified.

## 5.3 Release voltage

The release voltage shall not be less than 10 % of the minimum rated input voltage that is specified in 5.2.

NOTE Higher values can be stated upon agreement between manufacturer and user.

The release voltages apply over the full ambient temperature range shall be specified by the manufacturer.

## 5.4 Power consumption

The rated power consumption of a time relay shall be given at rated input voltage. In case of time relays with several input circuits, the respective rated power consumption shall be given.

NOTE For time relays with an input which varies depending on the position of the moved parts or for any other reason, the higher value should be given in VA or in W. In the case of alternating current the power factor is optional.

## 5.5 Output circuit

Output load ratings shall be specified by the manufacturer.

Documents
Document Sharing Hub
Full document details: 20/30423330 DC

### 5.5.1 Electromechanical output circuit

a) Resistive loads, inductive loads, and special loads (e.g. lamp loads, cable loads) shall be specified in accordance with 5.7, Annex B and Annex D of IEC 61810-1:2015 or table 4 and table 5 of IEC 60947-5-1.

The manufacturer shall state the following:

- rated load values for the output circuits;
- number of cycles for electrical endurance;
- number of cycles for mechanical endurance;
- frequency of operation.

b) Low energy loads (for example electronic systems and programmable controllers) shall be specified in accordance with IEC 60947-5-4. The manufacturer shall state the rated load values and statistical assessed constant mean number of operating cycles ($m_c$). The following examples are preferred formats for specifying rated load values:

- minimum voltage and current (for example 24 V, 1 mA);
- minimum power (for example 50 mW, such as 5 V / 10 mA or 10 V / 5 mA), meaning with 5 V the current shall be at least 10 mA, or with 5 mA the voltage shall be at least 10 V.

### 5.5.2 Mechanical endurance

Mechanical endurance value of the internal relay shall be used. As an alternative the manufacturer may perform a mechanical endurance test according to IEC 61810-1.

### 5.5.3 Solid state output circuit

Load categories shall be specified in accordance with 4.4 of IEC 62314:2006 as applicable.

The manufacturer shall state the maximum value of

- voltage drop at rated load current;
- leakage current at maximum specified ambient temperature.

### 5.5.4 Endurance and operating frequency

The preferred values of the endurance and operating frequency are given in Table 2 and Table 3.

**Table 2 – Preferred values of endurance**

| Operating cycles × $10^6$ |
|---|
| 0,03 |
| 0,1 |
| 0,2 |
| 0,3 |
| 0,5 |
| 1 |
| 3 |
| 10 |
| 20 |
| 30 |

**Table 3 – Preferred values of maximum permissible operating frequency**

| Operating frequency under load conditions (cycles per hour) [a] |
|---|

AVA Documents Document Sharing Hub

Full document details: 20/30423330 DC

| |
|---|
| 12<br>30<br>120<br>300<br>600<br>1 200<br>1 800<br>3 600<br>7 200 |
| [a] This applies only in so far as permissible due to the shortest adjustable time delay. |

### 5.5.5 Conditional short circuit current

The rated conditional short-circuit current of an equipment is the value of prospective current, stated by the manufacturer. The equipment, protected by a short-circuit protective device specified by the manufacturer, can withstand satisfactorily for the operating time of this device under the test conditions specified.

The details of the specified short-circuit protective device shall be stated by the manufacturer.

NOTE 1 For AC, the rated conditional short-circuit current is expressed by the RMS. value of the AC component.

The test circuit load impedance shall be an air-cored inductor in series with a resistor, adjusted to a prospective current of 1 000 A, or another value if stated by the manufacturer but not less than 100 A, at a power factor of between 0,5 and 0,7 and at the rated operational voltage. The open circuit voltage shall be 1,1 times the maximum rated operational voltage of the switching element.

[SOURCE: IEC 60947-1:2014, 2.5.29 & IEC 60947-5-1:2016, 8.3.4.2]

## 5.6 Ambient temperature

Unless otherwise stated, the preferred ambient temperature range is –10 °C to +40 °C for the operation of time relays.

## 5.7 Transport and storage temperature

Equipment subjected to these extreme temperatures without being operated shall not undergo any irreversible damage and shall then operate normally under the specified conditions.

Temperature range for:

- storage: –25 °C to +55 °C;
- transport: –40 °C to +70 °C.

## 5.8 Humidity

Unless otherwise stated, the preferred relative humidity range is 25 % to 75 %.

## 5.9 Pollution degree

Unless otherwise stated, the time relay is for use in pollution degree 2 environmental conditions in accordance with IEC 60664-1. However, other pollution degrees may be considered to apply, depending upon the micro-environment.

NOTE 1 The pollution degree of the micro-environment of the time relay may be influenced by installation in an enclosure.

Documents
Document Sharing Hub
Full document details: 20/30423330 DC