Draft for Public Comment

Form 36

DPC: 20/30426553 DC

BSI Group Headquarters

389 Chiswick High Road London W4 4AL

Tel: +44 (0)20 8996 9000
Fax: +44 (0)20 8996 7400
www.bsigroup.com

Date: 28 August 2020
Origin: International

Latest date for receipt of comments: 23 September 2020

Project No. 2018/01174

Responsible committee: EPL/47 Semiconductors

Interested committees:

Title: Draft BS EN IEC 62228-7 Integrated circuits - EMC evaluation of transceivers. Part 7: CXPI transceivers.

Please notify the secretary if you are aware of any keywords that might assist in classifying or identifying the standard or if the content of this standard

i) has any issues related to 3rd party IPR, patent or copyright
ii) affects other national standard(s)
iii) requires additional national guidance or information

WARNING: THIS IS A DRAFT AND MUST NOT BE REGARDED OR USED AS A BRITISH STANDARD. THIS DRAFT IS NOT CURRENT BEYOND 23 September 2020

This draft is issued to allow comments from interested parties; all comments will be given consideration prior to publication. No acknowledgement will normally be sent. **See overleaf for information on the submission of comments.**

No copying is allowed, in any form, without prior written permission from BSI except as permitted under the Copyright, Designs and Patent Act 1988 or for circulation within a nominating organization for briefing purposes. Electronic circulation is limited to dissemination by e-mail within such an organization by committee members.

Further copies of this draft may be purchased from BSI Shop http://shop.bsigroup.com or from BSI Customer Services, Tel: +44(0) 20 8996 9001 or email cservices@bsigroup.com. British, International and foreign standards are also available from BSI Customer Services.

Information on the co-operating organizations represented on the committees referenced above may be obtained from https://standardsdevelopment.bsigroup.com/.

Responsible Committee Secretary: Committee Service Centre (BSI)
Direct tel: 020 8996 7009
E-mail: csc@bsigroup.com

Documents
Document Sharing Hub
Full document details: 20/30426553 DC

Introduction

This draft standard is based on national and international discussions. Your comments on this draft are invited and will assist in the preparation of the consequent standard.

For international standards, comments will be reviewed by the relevant UK national committee before sending the consensus UK vote and comments to the international committee, which will then decide appropriate action. If the international standard is approved, it is usual for the text to be published as a British Standard.

For national standards, comments will be reviewed by the relevant UK national committee and the resulting standards published as a British Standard.

UK Vote

Please indicate whether you consider the UK should submit a negative (with supporting technical reasons) or positive vote on this draft. Please indicate if you are aware of any reason why this draft standard should not be published as a British Standard.

Submission of Comments

- **Annotated drafts are not acceptable and will be rejected.**
- All comments should be submitted online at **https://standardsdevelopment.bsigroup.com/**. You will need to register in order to comment.

Template for comments and secretariat observations

Date: xx/xx/20xx	Document: ISO/DIS xxxx

1	2	(3)	4	5	(6)	7
MB	Clause No./ Subclause No./Annex **(e.g. 3.1)**	Paragraph/Figure/ Table/Note	**Type of comment**	**Commend (justification for change) by the MB**	**Proposed change by the MB**	**Secretariat observations on each comment submitted**
	3.1	Definition 1	ed	Definition is ambiguous and needs clarifying.	Amend to read '...so that the mains connector to which no connection...'	
	6.4	Paragraph 2	te	The use of the UV photometer as an alternative cannot be supported as serious problems have been encountered in its use in the UK.	Delete reference to UV photometer.	

Documents
Document Sharing Hub

Full document details: 20/30426553 DC

47A/1103/CD

COMMITTEE DRAFT (CD)

PROJECT NUMBER: **IEC 62228-7 ED1**	
DATE OF CIRCULATION: **2020-08-28**	CLOSING DATE FOR COMMENTS: **2020-10-23**
SUPERSEDES DOCUMENTS: **47A/1091/CD, 47A/1096A/CC**	

IEC SC 47A : INTEGRATED CIRCUITS	
SECRETARIAT: Japan	SECRETARY: Mr Yoshinori FUKUBA
OF INTEREST TO THE FOLLOWING COMMITTEES:	PROPOSED HORIZONTAL STANDARD: ☐ Other TC/SCs are requested to indicate their interest, if any, in this CD to the secretary.
FUNCTIONS CONCERNED: ☒ EMC ☐ ENVIRONMENT ☐ QUALITY ASSURANCE ☐ SAFETY	

This document is still under study and subject to change. It should not be used for reference purposes.

Recipients of this document are invited to submit, with their comments, notification of any relevant patent rights of which they are aware and to provide supporting documentation.

TITLE:

Integrated circuits - EMC evaluation of transceivers – Part 7: CXPI transceivers

NOTE FROM TC/SC OFFICERS:

SC 47A WG 9 decided to circulate 3rd CD as shown at 47A/1096A/CC at a meeting held at a web conference in May 2020. At the meeting, the CD distribution period was set to 8 weeks.

Copyright © 2020 International Electrotechnical Commission, IEC. All rights reserved. It is permitted to download this electronic file, to make a copy and to print out the content for the sole purpose of preparing National Committee positions. You may not copy or "mirror" the file or printed version of the document, or any part of it, for any other purpose without permission in writing from IEC.

Documents
Document Sharing Hub

Full document details: 20/30426553 DC

CONTENTS

FOREWORD 5
1 Scope 7
2 Normative references 7
3 Terms, definitions and abbreviated terms 7
3.1 Terms and definitions 8
3.2 Abbreviated terms 8
4 General 8
5 Test and operating conditions 10
5.1 Supply and ambient conditions 10
5.2 Test operation modes 11
5.3 Test configuration 11
5.3.1 General test configuration for functional test 11
5.3.2 General test configuration for unpowered ESD test 12
5.3.3 Coupling ports and coupling networks for functional tests 12
5.3.4 Coupling ports and coupling networks for unpowered ESD tests 14
5.3.5 Power supply with decoupling network 14
5.4 Test signals 15
5.4.1 General 15
5.4.2 Test signals for normal operation mode 15
5.4.3 Test signal for sleep mode 16
5.5 Evaluation criteria 16
5.5.1 General 16
5.5.2 Evaluation criteria in functional operation modes during exposure to disturbances 16
5.5.3 Evaluation criteria in unpowered condition after exposure to disturbances 18
5.5.4 Status classes 19
6 Test and measurement 19
6.1 Emission of RF disturbances 19
6.1.1 Test method 19
6.1.2 Test setup 19
6.1.3 Test procedure and parameters 20
6.2 Immunity to RF disturbances 21
6.2.1 Test method 21
6.2.2 Test setup 21
6.2.3 Test procedure and parameters 23
6.3 Immunity to impulses 25
6.3.1 Test method 25
6.3.2 Test setup 25
6.3.3 Test procedure and parameters 27
6.4 Electrostatic Discharge (ESD) 29
6.4.1 Test method 29
6.4.2 Test setup 29
6.4.3 Test procedure and parameters 31
7 Test report 31
Annex A (normative) CXPI test circuits 32

AVA Documents
Document Sharing Hub
Full document details: 20/30426553 DC

A.1 General ... 32
A.2 CXPI test circuit for functional tests on standard type- A CXPI transceiver ICs ... 32
A.3 CXPI test circuit for functional tests on standard type-B CXPI transceiver ICs ... 35
A.4 CXPI test circuit for functional tests on ICs with embedded CXPI transceiver ... 37
A.5 CXPI test circuit for unpowered ESD test on a standard CXPI transceiver IC ... 38
A.6 CXPI test circuit for unpowered ESD test on a standard Type-B CXPI transceiver IC ... 39
Annex B (normative) Test circuit boards ... 40
B.1 Test circuit board for functional tests ... 40
B.2 ESD test ... 41
Annex C (informative) Examples for test limits for CXPI transceiver in automotive application ... 42
C.1 General ... 42
C.2 Emission of RF disturbances ... 42
C.3 Immunity to RF disturbances ... 43
C.4 Immunity to impulse ... 45
C.5 Electrostatic Discharge (ESD) ... 45
Annex D (informative) Example of a test setup and procedure for mode transitions ... 46
D.1 General ... 46
D.2 An example of the timing chart of the mode transition ... 46
Annex E (informative) Points to note for impulse immunity measurement for functional status class A_{IC} ... 48
E.1 General ... 48
E.2 Points to note when testing Pulse 1 ... 48
Bibliography ... 50

Figure 1 – Overview of CXPI transceiver types ... 9
Figure 2 – General test configuration for tests in functional operation modes ... 11
Figure 3 – General test configuration for unpowered ESD test ... 12
Figure 4 – Coupling ports and networks for functional tests ... 13
Figure 5 – Coupling ports and networks for unpowered ESD tests ... 14
Figure 6 – Principal drawing of the maximum deviation in the I-V characteristic ... 19
Figure 7 – Test setup for measurement of RF disturbances ... 20
Figure 8 – Test setup for DPI tests ... 22
Figure 9 – Test setup for impulse immunity tests ... 26
Figure 10 – Test setup for direct ESD tests ... 30
Figure A.1 General drawing of the circuit diagram of the test network for standard type-A CXPI transceiver ICs for functional tests ... 34
Figure A.2 General drawing of the circuit diagram of the test network for standard type-B CXPI transceiver ICs for functional tests ... 36
Figure A.3 General drawing of the circuit diagram of the test network for ICs with embedded CXPI transceiver for functional tests ... 38
Figure A.4 – A general drawing of the test circuit diagram for testing direct ESD of CXPI transceiver in unpowered mode ... 38
Figure A.5 – A general drawing of the test circuit diagram for testing direct ESD of CXPI Standard Type-B transceiver in unpowered mode ... 39
Figure B.1 – Example of IC interconnections of CXPI signal ... 40
Figure B.2 – Example of ESD test board for CXPI transceiver ICs ... 41

AVA Documents
Document Sharing Hub
Full document details: 20/30426553 DC

Figure C.1 – Example of limits for RF emission - CXPI 42
Figure C.2 – Example of limits for RF emission - VBAT 42
Figure C.3 – Example of limits for RF immunity for functional status class AIC – CXPI 43
Figure C.4 – Example of limits for RF immunity for functional status class AIC – VBAT 44
Figure C.5 – Example of limits for RF immunity for functional status class CIC or DIC - CXPI 44
Figure C.6 – Example of limits for RF immunity for functional status class CIC or DIC - VBAT 45
Figure D.1 – Example of timing chart for mode transition in 2 transceiver configuration 46
Figure E.1 – Relationship between ISO 7637-2 Pulse 1 and transceiver VBAT supply 48
Figure E.2 – Transceiver VBAT supply image when t_2 time is shortened 49

Table 1 – Types for CXPI transceiver 9
Table 2 – Overview of required measurement and tests 10
Table 3 – Supply and ambient conditions for functional operation 10
Table 4 – Definition of coupling ports and coupling network component for functional tests 13
Table 5 – Definitions of coupling ports for unpowered ESD tests 14
Table 6 – Communication test signal TX1 15
Table 7 – Communication test signal TX2 15
Table 8 – Communication test signal TX3 16
Table 9 – Evaluation criteria for standard CXPI transceiver ICs in functional operation modes 17
Table 10 – Evaluation criteria for ICs with embedded CXPI transceiver in functional operation modes 18
Table 11 – Parameters for emission measurements 21
Table 12 – Settings for the RF measurement equipment 21
Table 13 – Specifications for DPI tests 23
Table 14 – Required DPI tests for functional status class AIC evaluation of standard CXPI transceiver ICs 24
Table 15 – Required DPI tests for functional status class AIC evaluation of ICs with embedded CXPI transceiver 24
Table 16 – Required DPI tests for functional status class CIC, D1IC or D2IC evaluation of standard CXPI transceiver ICs and ICs with embedded CXPI transceiver 25
Table 17 – Specifications for impulse immunity tests 27
Table 18 – Parameters for impulse immunity tests 27
Table 19 – Required impulse immunity tests for functional status class AIC evaluation of standard CXPI transceiver ICs 28
Table 20 – Required impulse immunity tests for functional status class AIC evaluation of ICs with embedded CXPI transceiver 28
Table 21 – Required impulse immunity tests for functional status class CIC, D1IC or D2IC evaluation of standard CXPI transceiver ICs and ICs with embedded CXPI transceiver 29
Table 22 – Recommendations for direct ESD tests 31
Table B.1 – Parameter ESD test circuit board 41
Table C.1 – Example of limits for impulse immunity for functional status class C_{IC} or D_{IC} 45

Documents
Document Sharing Hub
Full document details: 20/30426553 DC

INTERNATIONAL ELECTROTECHNICAL COMMISSION

INTEGRATED CIRCUITS – EMC EVALUATION OF TRANSCEIVERS –

Part 7: CXPI transceivers

FOREWORD

1) The International Electrotechnical Commission (IEC) is a worldwide organization for standardization comprising all national electrotechnical committees (IEC National Committees). The object of IEC is to promote international co-operation on all questions concerning standardization in the electrical and electronic fields. To this end and in addition to other activities, IEC publishes International Standards, Technical Specifications, Technical Reports, Publicly Available Specifications (PAS) and Guides (hereafter referred to as "IEC Publication(s)"). Their preparation is entrusted to technical committees; any IEC National Committee interested in the subject dealt with may participate in this preparatory work. International, governmental and non-governmental organizations liaising with the IEC also participate in this preparation. IEC collaborates closely with the International Organization for Standardization (ISO) in accordance with conditions determined by agreement between the two organizations.

2) The formal decisions or agreements of IEC on technical matters express, as nearly as possible, an international consensus of opinion on the relevant subjects since each technical committee has representation from all interested IEC National Committees.

3) IEC Publications have the form of recommendations for international use and are accepted by IEC National Committees in that sense. While all reasonable efforts are made to ensure that the technical content of IEC Publications is accurate, IEC cannot be held responsible for the way in which they are used or for any misinterpretation by any end user.

4) In order to promote international uniformity, IEC National Committees undertake to apply IEC Publications transparently to the maximum extent possible in their national and regional publications. Any divergence between any IEC Publication and the corresponding national or regional publication shall be clearly indicated in the latter.

5) IEC itself does not provide any attestation of conformity. Independent certification bodies provide conformity assessment services and, in some areas, access to IEC marks of conformity. IEC is not responsible for any services carried out by independent certification bodies.

6) All users should ensure that they have the latest edition of this publication.

7) No liability shall attach to IEC or its directors, employees, servants or agents including individual experts and members of its technical committees and IEC National Committees for any personal injury, property damage or other damage of any nature whatsoever, whether direct or indirect, or for costs (including legal fees) and expenses arising out of the publication, use of, or reliance upon, this IEC Publication or any other IEC Publications.

8) Attention is drawn to the Normative references cited in this publication. Use of the referenced publications is indispensable for the correct application of this publication.

9) Attention is drawn to the possibility that some of the elements of this IEC Publication may be the subject of patent rights. IEC shall not be held responsible for identifying any or all such patent rights.

International Standard IEC 62228-7 has been prepared by subcommittee 47A: Integrated circuits, of IEC technical committee 47: Semiconductor devices.

The text of this International Standard is based on the following documents:

FDIS	Report on voting
47A/XX/FDIS	47A/XX/RVD

Full information on the voting for the approval of this International Standard can be found in the report on voting indicated in the above table.

This document has been drafted in accordance with the ISO/IEC Directives, Part 2.

Documents
Document Sharing Hub

Full document details: 20/30426553 DC

The committee has decided that the contents of this document will remain unchanged until the stability date indicated on the IEC website under "http://webstore.iec.ch" in the data related to the specific document. At this date, the document will be

- reconfirmed,
- withdrawn,
- replaced by a revised edition, or
- amended.

The National Committees are requested to note that for this document the stability date is 2026.

THIS TEXT IS INCLUDED FOR THE INFORMATION OF THE NATIONAL COMMITTEES AND WILL BE DELETED AT THE PUBLICATION STAGE.

Documents
Document Sharing Hub

Full document details: 20/30426553 DC

INTEGRATED CIRCUITS – EMC EVALUATION OF TRANSCEIVERS –

Part 7: CXPI transceivers

1 Scope

This part of IEC 62228 specifies test and measurement methods for the EMC evaluation of CXPI transceiver ICs under network condition. It defines test configurations, test conditions, test signals, failure criteria, test procedures, test setups and test boards. This specification is applicable for standard CXPI transceiver ICs and ICs with embedded CXPI transceiver and covers

- the emission of RF disturbances,
- the immunity against RF disturbances,
- the immunity against impulses and
- the immunity against electrostatic discharges (ESD).

2 Normative references

The following documents are referred to in the text in such a way that some or all of their content constitutes requirements of this document. For dated references, only the edition cited applies. For undated references, the latest edition of the referenced document (including any amendments) applies.

IEC 61967-1, *Integrated circuits – Measurement of electromagnetic emissions – Part 1: General conditions and definitions*

IEC 61967-4, *Integrated circuits – Measurement of electromagnetic emissions – Part 4: Measurement of conducted emissions – 1 Ω/150 Ω direct coupling method*

IEC 62132-1, *Integrated circuits – Measurement of electromagnetic immunity – Part 1: General conditions and definitions*

IEC 62132-4, *Integrated circuits – Measurement of electromagnetic immunity 150 kHz to 1 GHz – Part 4: Direct Power RF Power injection method*

IEC 62215-3, *Integrated circuits – Measurement of impulse immunity – Part 3: Non-synchronous transient injection method*

IEC 62228-1, *Integrated circuits – EMC evaluation of transceivers – Part 1: General conditions and definitions*

ISO 7637-2, *Road vehicles – Electrical disturbances from conduction and coupling – Part 2: Electrical transient conduction along supply lines only*

ISO 10605, *Road vehicles – Test methods for electrical disturbances from electrostatic discharge*

ISO 20794-4, *Road vehicles – Clock extension peripheral interface (CXPI) – Part 4: Data link layer and physical layer*

Electronic Components Industry Association, *EIA-198, Ceramic Dielectric Capacitors Classes I, II, III and IV*

3 Terms, definitions and abbreviated terms

For the purposes of this document, the terms and definitions given in IEC 62228-1, IEC 61967-1 and IEC 62132-1, as well as the following apply.

ISO and IEC maintain terminological databases for use in standardization at the following addresses:

AVA Documents Document Sharing Hub

Full document details: 20/30426553 DC

- IEC Electropedia: available at http://www.electropedia.org/
- ISO Online browsing platform: available at http://www.iso.org/obp

3.1 Terms and definitions

3.1.1
global pin
pin that carries a signal or power, which enters or leaves the application board without any active component in between

3.1.2
standard CXPI transceiver IC
standalone CXPI transceiver according to ISO 20794-4 or IC with integrated CXPI transceiver cell with access to CXPI RXD and TXD signal

3.1.3
IC with embedded CXPI transceiver
IC with integrated CXPI transceiver cell and CXPI protocol handler but without access to CXPI RXD or TXD signal

3.1.4
mandatory components, pl
components needed for proper function of IC as specified by the IC manufacturer

3.2 Abbreviated terms

ASSP	application specific standard product
CRC	cyclic redundancy check
CXPI	Clock Extension Peripheral Interface
ECU	electronic control unit
FI	frame information
IBS	inter byte space
NRZ	non-return to zero
PID	protected identifier
PWM	pulse width modulation
RX_{PWM}	output signal for receiver in CXPI bus-line driver
RXD_{NRZ}	output signal for receiver in CXPI codec circuit
TX_{PWM}	input signal for transmitter in CXPI bus-line driver
TXD_{NRZ}	input signal for transmitter in CXPI codec circuit
UART	universal asynchronous receiver / transmitter

4 General

The intention of this document is to evaluate the EMC performance of CXPI transceiver ICs under application conditions in a minimal network. CXPI Transceiver ICs are generally classified into three types, as listed in Table 1. Standard type-A and Standard Type-B are standard CXPI transceiver ICs, with the former including a codec and the latter not. The Embedded type contains an embedded CXPI.

Figure 1 shows a sample configuration of each type of CXPI transceiver IC. Standard type-A comprises a CXPI transceiver IC that contains a codec circuit and a bus-line driver. Standard type-B contains only a bus driver. The Embedded type includes a microcontroller or ASSP function, in addition to the functions of Standard type-A. The bus-line driver transmits and receives communication data on the bus line in the PWM signal format. The codec circuit converts the communication data codes into PWM and NRZ signals. The microcontroller or ASSP transmits and receives the communication data in the NRZ signal format according to the specifications of the application.

AVA Documents
Document Sharing Hub
Full document details: 20/30426553 DC

Table 1 – Types for CXPI transceiver

Transceiver classification	CXPI transceiver type	
standard CXPI transceiver IC	Standard type-A	with codec function
	Standard type-B	without codec function
IC with embedded CXPI transceiver	Embedded type	

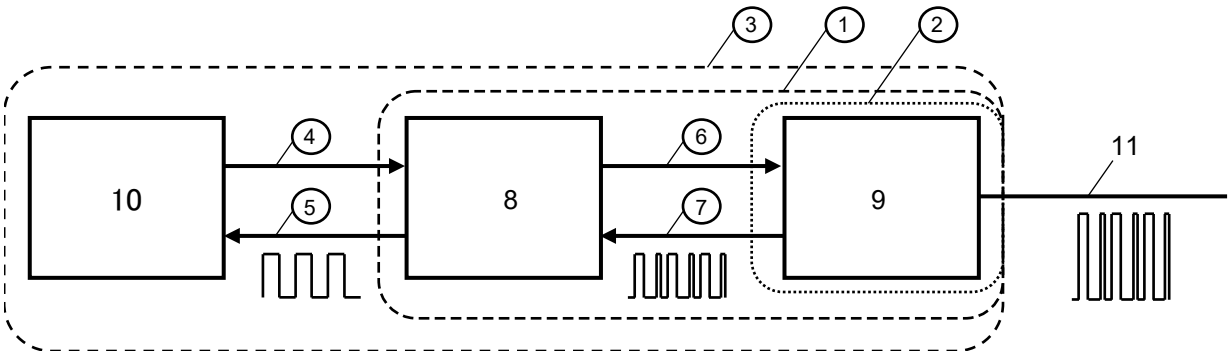

Key

1 Standard type-A
2 Standard type-B
3 Embedded type
4 TXD_{NRZ}
5 RXD_{NRZ}
6 TX_{PWM}
7 RX_{PWM}
8 Codec circuit
9 Bus-line driver
10 Microcontroller or ASSP
11 CXPI bus-line

Figure 1 – Overview of CXPI transceiver types

The evaluation of the EMC characteristics of CXPI transceivers shall be performed in functional operation modes under network conditions for RF emission, RF immunity and impulse immunity tests, and on a single unpowered transceiver IC for electrostatic discharge tests.

The aim of these tests is to determine the EMC performance on dedicated global pins of the CXPI transceiver, which are considered as EMC relevant in the application. For a standard CXPI transceiver IC and an IC with an embedded CXPI transceiver, these pins are VBAT and CXPI.

The test methods used for EMC characterization are based on the international standards for IC EMC tests and are described in Table 2.

Documents
Document Sharing Hub
Full document details: 20/30426553 DC

Table 2 – Overview of required measurement and tests

Transceiver mode	Required test	Test method	Evaluation	Functional operation mode
Functional (powered)	RF emission	150 Ω direct coupling (IEC 61967-4)	Spectrum	Normal
	RF immunity	DPI (IEC 62132-4)	Function	Normal
				Sleep
	Impulse immunity	Non-synchronous transient injection (IEC 62215-3)	Function	Normal
				Sleep
Passive (unpowered)	ESD	Contact discharge (ISO 10605)	Damage	Off

The RF emission, RF immunity and impulse immunity test methods are selected for the evaluation of EMC characteristic of transceivers in functional (powered) modes. These three test methods are based on the same approach using conductive coupling. Therefore it is possible to use the same test board for all tests in functional operation mode, which reduces the effort required and increases the reproducibility and comparability of test results.

The ESD test is performed on passive (unpowered) transceiver IC on a separate test board.

All measurements and tests should be done with soldered transceivers on test boards as described in Annex B, to ensure application like conditions and avoid setup effects by sockets.

In general, the test definition is done for standard CXPI transceiver ICs. For ICs with embedded CXPI transceivers some adaptations are necessary which are mainly described in this document. Specific adaptations have to be done individually for the dedicated IC but shall follow the general definitions identified.

5 Test and operating conditions

5.1 Supply and ambient conditions

For all tests and measurements under operating conditions, the settings are based on systems with a 12 V power supply, which is the main application for CXPI transceivers. If a transceiver is designed or targeted for a higher power supply voltage, the test conditions and test targets shall be adapted and documented accordingly. The defined supply and ambient conditions for functional operation are given in Table 3. Although the standard voltage of VCC_{ext} is 5 V, other voltages such as 3,3 V may be supplied depending on the product.

Table 3 – Supply and ambient conditions for functional operation

Parameter	Value
Voltage supply $VBAT_{ext}$	(14 ± 0,2) V (default)
Voltage supply VCC_{ext}	(5 ± 0,1) V (default), (3,3 ± 0,1) V
Test temperature	(23 ± 5) °C

AVA Documents
Document Sharing Hub
Full document details: 20/30426553 DC

For RF emission measurements the ambient noise floor shall be at least 6 dB below the applied target limit and documented in the test report.

Unpowered ESD tests shall be carried out without any supply voltage, and the requirements of ISO 10605 climatic environmental conditions shall be applied.

5.2 Test operation modes

The CXPI transceiver ICs shall be tested in powered functional operation modes and in the unpowered mode. The functional operation modes are normal mode and sleep mode.

5.3 Test configuration

5.3.1 General test configuration for functional test

The test configuration in general consists of CXPI transceivers with mandatory external components and components for filtering and decoupling ($CXPI_{ext}$ node) in a minimal test network, where filtered power supplies, signals, monitoring probes and coupling networks are connected as shown in Figure 2.

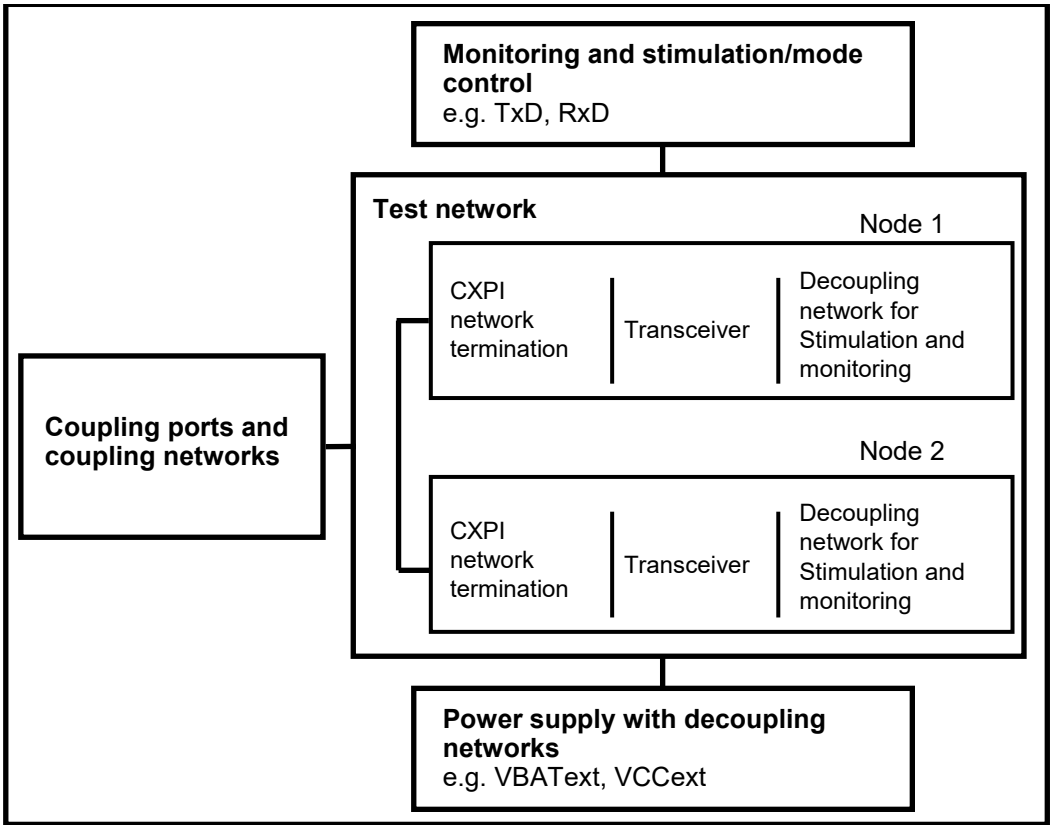

Figure 2 – General test configuration for tests in functional operation modes

For evaluation of RF emission, RF immunity and the impulse immunity characteristics of a CXPI transceiver in functional operation mode, a minimal CXPI test network consisting of two CXPI transceiver ICs of the same type shall be used. Depending on the type of transceiver the following network configurations are defined:

- two transceivers of same type in case of standard CXPI transceiver IC (DUT), or
- one IC with embedded CXPI transceiver (DUT) and one standard CXPI transceiver IC.

NOTE In specific cases or for analyses, a deviation from this setup can be agreed between the users of this document and will be noted in the test report.

Documents
Document Sharing Hub
Full document details: 20/30426553 DC

The CXPI network termination shall be used the components to comply with the time constant defined in ISO 20794-4.

A general drawing of a schematic with more details of the CXPI transceiver test network is given in Annex A.

5.3.2 General test configuration for unpowered ESD test

The general test configuration for unpowered ESD test of CXPI transceiver ICs consists of a single CXPI transceiver IC with mandatory external components and components for filtering on a test board with discharge coupling networks as shown in Figure 3.

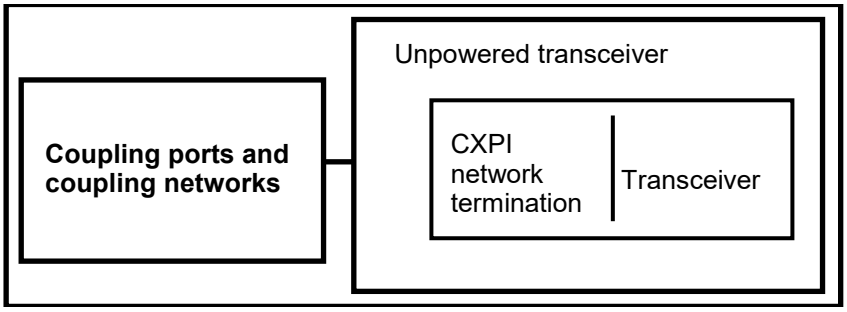

Figure 3 – General test configuration for unpowered ESD test

5.3.3 Coupling ports and coupling networks for functional tests

The coupling ports and coupling networks are used to transfer disturbances to or from the test network with a defined transfer characteristic. The schematic of the coupling ports, networks and pins are shown in Figure 4. The basic measurement pins are CXPI and VBAT, however other pins connected to the ECU connector shall also be measured. The values of the components depend on the test method and are defined in Table 4. The tolerance of the components should be 1 % or less.

Documents
Document Sharing Hub
Full document details: 20/30426553 DC

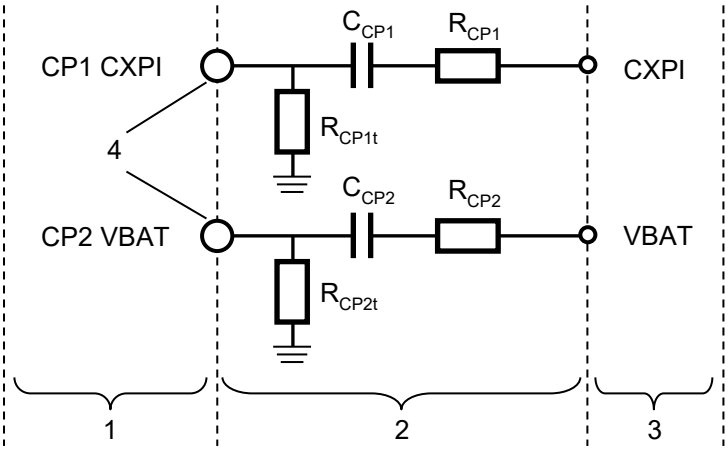

Key

1 Coupling ports
2 Coupling networks
3 IC pins
4 RF connector

Figure 4 – Coupling ports and networks for functional tests

Table 4 – Definition of coupling ports and coupling network component for functional tests

Port	Type	Purpose	Component		
			R_{CP1}, R_{CP2}	C_{CP1}, C_{CP2}	R_{CP1t}, R_{CP2t}
CP1	EMI1	RF emission measurement on CXPI	120 Ω	3.3 nF	51 Ω
	RF1	RF coupling for test on CXPI	0 Ω	3.3 nF	not used
	IMP1	Impulse coupling on CXPI	0 Ω	1,0 nF	not used
CP2	EMI2	RF emission measurement on VBAT	120 Ω	6,8 nF	51 Ω
	RF2	RF coupling for test on VBAT	0 Ω	6,8 nF	not used
	IMP2	Impulse coupling on VBAT	0 Ω	Shorted	not used

The test configurations with coupling ports and coupling networks connected to the CXPI test network are given in the general drawing of schematics in Figure A.1 for standard type-A CXPI transceiver ICs, in Figure A.2 for standard type-B CXPI transceiver ICs and in Figure A.3 for ICs with embedded CXPI transceiver.

The characterization of the coupling ports and coupling networks is carried out as follows:

The magnitude of insertion losses (S21 measurement) between the ports CP1, CP2 and the respective transceiver signal pads on the test board shall be measured and documented in the test report. The connection of signal pads using a 50 Ω coaxial probe directly, and ground connection shall be as short as possible. For this characterization, the coupling port shall be configured for the RF immunity test and the CXPI transceiver ICs shall be removed. All other components which are directly connected to the coupling port (e.g. filter to power supply or loads) remain on the test board.

AVA Documents
Document Sharing Hub
Full document details: 20/30426553 DC

5.3.4 Coupling ports and coupling networks for unpowered ESD tests

The coupling ports and coupling networks used for unpowered direct ESD tests connect the discharge points to the CXPI transceiver IC test circuitry. The schematic and definitions of the coupling ports, networks and pins are given in Figure 5 and Table 5. The basic measurement pins are CXPI and VBAT, but other pins connected to the ECU connector shall be measured.

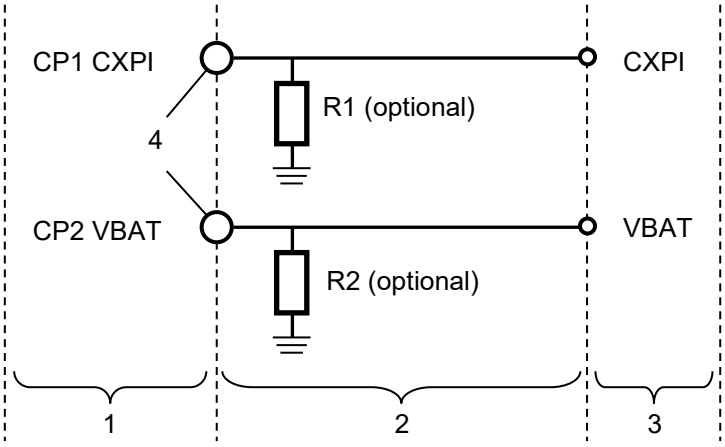

Key

1 Coupling ports
2 Coupling networks
3 IC pins
4 Discharge point

Figure 5 – Coupling ports and networks for unpowered ESD tests

Table 5 – Definitions of coupling ports for unpowered ESD tests

Port	Type	Purpose	Component
CP1	ESD1	ESD coupling on CXPI	Metal trace for galvanic connection [a]
CP2	ESD2	ESD coupling on VBAT	Metal trace for galvanic connection [a]

[a] The optional resistors R1 and R2 with R ≥ 200 kΩ are used to avoid static pre-charge at the discharge point caused by the ESD generator. Sparking over at these resistors at high test levels shall be avoided. If a static pre-charge is prevented by the ESD generator construction, these resistors are not needed. Alternatively, an external resistor can be used to remove the pre-charge on each discharge point before each single test.

5.3.5 Power supply with decoupling network

In the general test configurations, decoupling circuits shall be added to the supply lines such as VBAT, VCC, etc.

See Annex A for an example of decoupling circuits on a test configuration with two CXPI transceiver ICs.

Documents
Document Sharing Hub
Full document details: 20/30426553 DC