EUROPEAN STANDARD

NORME EUROPÉENNE

EUROPÄISCHE NORM

DRAFT
prEN 17657

November 2021

ICS 65.040.20

English Version

Equipments for slaughterhouses - Slaughtering traps for bovine animals - Safety and hygiene requirements

Equipements pour les abattoirs - Boxes d'abattage pour bovins - Prescription relatives à la sécurité et à la nettoyabilité

Einrichtungen für Schlachthäuser - Schlachtfallen für Rinder - Sicherheits- und Hygieneanforderungen

This draft European Standard is submitted to CEN members for enquiry. It has been drawn up by the Technical Committee CEN/TC 153.

If this draft becomes a European Standard, CEN members are bound to comply with the CEN/CENELEC Internal Regulations which stipulate the conditions for giving this European Standard the status of a national standard without any alteration.

This draft European Standard was established by CEN in three official versions (English, French, German). A version in any other language made by translation under the responsibility of a CEN member into its own language and notified to the CEN-CENELEC Management Centre has the same status as the official versions.

CEN members are the national standards bodies of Austria, Belgium, Bulgaria, Croatia, Cyprus, Czech Republic, Denmark, Estonia, Finland, France, Germany, Greece, Hungary, Iceland, Ireland, Italy, Latvia, Lithuania, Luxembourg, Malta, Netherlands, Norway, Poland, Portugal, Republic of North Macedonia, Romania, Serbia, Slovakia, Slovenia, Spain, Sweden, Switzerland, Turkey and United Kingdom.

Recipients of this draft are invited to submit, with their comments, notification of any relevant patent rights of which they are aware and to provide supporting documentation.

Warning : This document is not a European Standard. It is distributed for review and comments. It is subject to change without notice and shall not be referred to as a European Standard.

EUROPEAN COMMITTEE FOR STANDARDIZATION
COMITÉ EUROPÉEN DE NORMALISATION
EUROPÄISCHES KOMITEE FÜR NORMUNG

CEN-CENELEC Management Centre: Rue de la Science 23, B-1040 Brussels

© 2021 CEN All rights of exploitation in any form and by any means reserved worldwide for CEN national Members.

Ref. No. prEN 17657:2021 E

Documents
Document Sharing Hub

Full document details: 21/30432868 DC

Contents

Page

European foreword 4
1 Scope 5
2 Normative references 5
3 Terms, definitions and description 7
3.1 Terms and definitions 7
3.2 Description – types of slaughtering traps 8
3.2.1 Fixed slaughtering trap 8
3.2.2 Rotating slaughtering trap 9
4 Safety and hygiene requirements and/or measures 11
4.1 General 11
4.2 Mechanical engineering measures 12
4.2.1 Zone 1: Volume swept by the ejection door 12
4.2.2 Zone 2: Volume swept by the entrance door 12
4.2.3 Zone 3: Working zone 12
4.2.4 Zone 4: Technical zone (transmission parts) 14
4.2.5 Zone 5: Reception zone 14
4.3 Animal escape measures 14
4.4 Electrical equipment measures 14
4.4.1 General 14
4.4.2 Stop device 15
4.4.3 Emergency stop device 15
4.4.4 Control circuits 15
4.4.5 Degrees of protection 15
4.4.6 Electromagnetic phenomena safety requirements 15
4.4.7 Electrical stunning 15
4.5 Pneumatic and hydraulic hazards 15
4.6 Noise reduction 16
4.7 Cleaning 16
4.8 Measures regarding compliance with ergonomic principles 16
5 Measures regarding respect for animal welfare 16
6 Checks 17
7 Information for use 18
7.1 Instructions 18
7.2 Operator training 20
7.3 Marking 20
7.4 Display for electrical slaughtering traps 20
Annex A (normative) Noise test code for slaughtering traps for bovine animals (grade 2) 21
A.1 Emission sound pressure level determination 21
A.2 Sound power level determination 21
A.3 Installation and mounting conditions 21
A.4 Measurement uncertainty 21
A.5 Operating conditions 22

Documents
Document Sharing Hub
Full document details: 21/30432868 DC

A.6 Measurement 22
A.7 Information to be recorded 22
A.8 Information to be reported 22
A.9 Declaration and verification of the noise emission values 23
Annex B (normative) **Design principles to ensure cleanability** 24
B.1 General 24
B.2 Definitions 24
B.3 Materials 24
B.4 Design 24
B.4.1 General 24
B.4.2 Surfaces 24
B.4.3 Connection of internal surfaces 24
B.4.4 Permanent joints 24
B.4.5 Fasteners 24
Annex C (informative) **List of significant hazards** 25
Annex ZA (informative) **Relationship between this European Standard and the essential requirements of Directive2006/42/EC aimed to be covered** 30
Bibliography 32

Documents
Document Sharing Hub
Full document details: 21/30432868 DC

European foreword

This document (prEN 17657:2021) has been prepared by Technical Committee CEN/TC 153 “Machinery intended for use with foodstuffs and feed”, the secretariat of which is held by DIN.

This document is currently submitted to the CEN Enquiry.

This document has been prepared under a mandate given to CEN by the European Commission and the European Free Trade Association, and supports essential requirements of EU Directive 2006/42/EC.

For relationship with EU Directive 2006/42/EC, see informative Annex ZA, which is an integral part of this document.

Documents
Document Sharing Hub
Full document details: 21/30432868 DC

1 Scope

This document specifies the safety and hygiene requirements applicable to slaughtering traps intended for bovine animals and equidae such as defined in Clause 3.

These requirements take into account hazards that may arise from the transport, mounting, adjustment, maintenance and use of these slaughtering traps.

NOTE This document takes into account the protection of animals at the time of killing.

The machinery or installations covered by this document are intended to facilitate the slaughter of bovine animals or equidae that weigh between 100 kg and 1 200 kg. They are either rotating slaughtering traps or fixed slaughtering traps.

This document does not cover the following machinery and zones:

— "restrainers": systems for holding and conveying via conveyor belts;

— slaughtering traps with a side door that opens under the weight of the animal alone;

— slaughtering traps where the only source of energy is manual effort.

This document does not cover the following essential requirements of Machinery Directive:

— safety and reliability of control systems;

— control devices;

— failure of the power supply;

— isolation of energy source.

The list of significant hazards is given in the informative Annex C.

2 Normative references

The following documents are referred to in the text in such a way that some or all of their content constitutes requirements of this document. For dated references, only the edition cited applies. For undated references, the latest edition of the referenced document (including any amendments) applies.

EN 614-1:2006+A1:2009, *Safety of machinery — Ergonomic design principles — Part 1: Terminology and general principles*

EN 1005-1:2001+A1:2008, *Safety of machinery — Human physical performance — Part 1: Terms and definitions*

EN 1005-2:2003+A1:2008, *Safety of machinery — Human physical performance — Part 2: Manual handling of machinery and component parts of machinery*

EN 1005-3:2002+A1:2008, *Safety of machinery — Human physical performance — Part 3: Recommended force limits for machinery operation*

EN 60204-1:2018, *Safety of machinery — Electrical equipment of machines — Part 1: General requirements*

Documents
Document Sharing Hub

Full document details: 21/30432868 DC

EN 60529:1991,[1] *Degrees of protection provided by enclosures (IP code)*

EN ISO 3744:2010, *Acoustics — Determination of sound power levels and sound energy levels of noise sources using sound pressure — Engineering methods for an essentially free field over a reflecting plane (ISO 3744:2010)*

EN ISO 3746:2010, *Acoustics — Determination of sound power levels and sound energy levels of noise sources using sound pressure — Survey method using an enveloping measurement surface over a reflecting plane (ISO 3746:2010)*

EN ISO 4413:2010, *Hydraulic fluid power — General rules and safety requirements for systems and their components (ISO 4413:2010)*

EN ISO 4414:2010, *Pneumatic fluid power — General rules and safety requirements for systems and their components (ISO 4414:2010)*

EN ISO 4871:2009, *Acoustics — Declaration and verification of noise emission values of machinery and equipment — (ISO 4871:1996)*

EN ISO 11201:2010, *Acoustics —- Noise emitted by machinery and equipment — Determination of emission sound pressure levels at a work station and at other specified positions in an essentially free field over a reflecting plane with negligible environmental corrections (ISO 11201:2010)*

EN ISO 11202:2010, *Acoustics — Noise emitted by machinery and equipment — Determination of emission sound pressure levels at a workstation and at other specified positions applying approximate environmental corrections (ISO 11202:2010)*

EN ISO 11688-1:2009, *Acoustics — Recommended practice for the design of low-noise machinery and equipment — Part 1: Planning (ISO/TR 11688-1:1995)*

EN ISO 12100:2010, *Safety of machinery — General principles for design — Risk assessment and risk reduction (ISO 12100:2010)*

EN ISO 13850:2015, *Safety of machinery — Emergency stop function — Principles for design (ISO 13850:2015)*

EN ISO 13851:2019, *Safety of machinery — Two-hand control devices — Principles for design and selection (ISO 13851:2019)*

EN ISO 13857:2019, *Safety of machinery — Safety distances to prevent hazard zones being reached by upper and lower limbs (ISO 13857:2019)*

EN ISO 14118:2018, *Safety of machinery — Prevention of unexpected start-up (ISO 14118:2017)*

EN ISO 14120:2015, *Safety of machinery — Guards — General requirements for the design and construction of fixed and movable guards (ISO 14120:2015)*

EN ISO 14122-3:2016, *Safety of machinery — Permanent means of access to machinery — Part 3: Stairs, stepladders and guard-rails (ISO 14122-3:2016)*

---

[1] As impacted by EN 60529:1991/A1:2000, EN 60529:1991/A2:2013, EN 60529:1991/corrigendum May 1993, EN 60529:1991/A2:2013/AC:2019-02 and EN 60529:1991/AC:2016-12.

Documents
Document Sharing Hub

Full document details: 21/30432868 DC

CEN/TS 16165:2016, *Determination of slip resistance of pedestrian surfaces — Methods of evaluation*

3 Terms, definitions and description

For the purposes of this document, the terms and definitions given in EN ISO 12100:2010, as well as the following terms and definitions apply.

3.1 Terms and definitions

3.1.1
fixed slaughtering trap
non-rotating slaughtering trap to fix the animal in a standing position for stunning

3.1.2
rotating slaughtering trap
slaughtering trap for fixing and rotating the animal in a chosen slaughtering position

3.1.3
bleeding
action of emptying the animal of its blood in order to cause its death

3.1.4
interlocking device
mechanical, electrical or other type of device, the purpose of which is to prevent the operation of hazardous machine functions under specified conditions (generally as long as a guard is not closed)

[SOURCE: EN ISO 12100:2010, definition 3.28.1]

3.1.5
interlocking guard with guard locking
guard associated with an interlocking device and a guard locking device so that, together with the control system of the machine, the following functions are performed:

a) the hazardous machine functions “covered” by the guard cannot operate until the guard is closed and locked;

b) the guard remains closed and locked until the risk due to the hazardous machine functions “covered” by the guard has disappeared;

c) when the guard is closed and locked, the hazardous machine functions “covered” by the guard can operate. The closure and locking of the guard do not by themselves start the hazardous machine functions.

Note 1 to entry: EN ISO 14119 gives detailed provisions.

[SOURCE: EN ISO 12100:2010, definition 3.27.5]

3.1.6
slaughtering
the killing of animals intended for human consumption

[SOURCE: definition from Regulation (EC) no. 1099/2009]

Documents
Document Sharing Hub
Full document details: 21/30432868 DC

3.1.7
stunning
any intentionally induced process which causes loss of consciousness and sensibility without pain, including any process resulting in instantaneous death

[SOURCE: definition from Regulation (EC) no. 1099/2009]

Note 1 to entry: This process may be of mechanical or electrical origin.

3.1.8
restraint
application to an animal of any procedure designed to restrict its movements sparing any avoidable pain, fear or agitation in order to facilitate effective stunning and killing

[SOURCE: definition from Regulation (EC) no. 1099/2009]

3.1.9
anti-escape device
device preventing the animal from rearing up or escaping over the slaughtering trap

3.1.10
entrance door
device through which the animal gets into the slaughtering trap by itself

3.1.11
ejection door
device through which the animal leaves the slaughtering trap after actions

3.1.12
head fixation
application to the head of an animal of any device to restrict its movements

3.2 Description – types of slaughtering traps

3.2.1 Fixed slaughtering trap

Fixed slaughtering traps shall be equipped with devices that restrict the lateral and vertical movements of the head of the animal. Other restricting apparatus can be added by design to prevent the animal from moving.

An example of configuration of a fixed slaughtering trap is shown in Figure 1.

Documents
Document Sharing Hub
Full document details: 21/30432868 DC

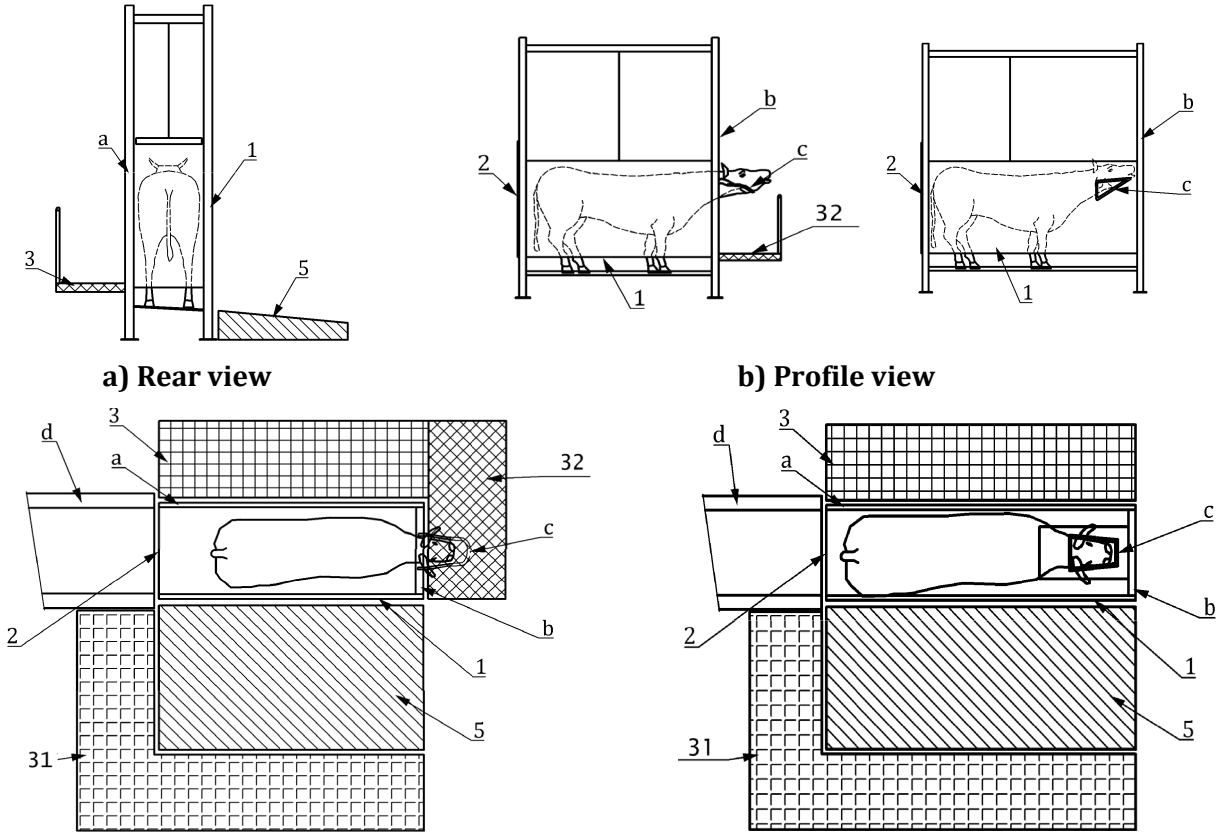

Key

Elements:

1 ejection door

2 entrance door

3 working zone (bringing the animal, holding and knocking out)

31 working area (slinging and removing)

32 area of operation (occasional) for bleeding the animal

5 animal reception zone

Other constituent bodies:

a) side wall

b) front panel and device that restricts the lateral and vertical movements

c) head fixation inside or outside

d) animal arrival corridor

Figure 1 — Example of fixed slaughtering trap

For a fixed slaughtering trap, ejection shall be carried out by a guillotine-type side door. Sloping ground or a tilting floor shall facilitate the removal of the stunned animal out of the slaughtering trap.

3.2.2 Rotating slaughtering trap

The rotating slaughtering trap shall allow the blocking, turning and possible orientation of the animal by electrical, hydraulic and/or pneumatic means.

Restraint shall be carried out at the level of the flanks, rear and head of the animal by soft devices using pneumatic or hydraulic cylinders, or manual mechanical systems.

During ejection of the stunned animal the following operations shall be performed:

a) opening of the ejection door;

b) extraction of the stunned animal:

Documents
Document Sharing Hub

Full document details: 21/30432868 DC

— pushing carried out by the holding panel;

— tilting of the floor;

— combination of pushing and tilting of the floor; or

— any other device favouring fast extraction.

An example of configuration of a rotating slaughtering trap is shown in Figure 2.

Documents
Document Sharing Hub
Full document details: 21/30432868 DC