Draft for Public Comment

Form 36

DPC: 21/30440115 DC

BSI Group Headquarters

389 Chiswick High Road London W4 4AL

Tel: +44 (0)20 8996 9000
Fax: +44 (0)20 8996 7400
www.bsigroup.com

Date: 18 June 2021
Origin: International

Latest date for receipt of comments: 11 August 2021

Project No. 2018/03899

Responsible committee: EPL/40X Capacitors and resistors for electronic equipment

Interested committees:

Title: Draft BS EN IEC 60384-14 Fixed capacitors for use in electronic equipment. Part 14: Sectional specification - Fixed capacitors for electromagnetic interference suppression and connection to the supply mains.

Please notify the secretary if you are aware of any keywords that might assist in classifying or identifying the standard or if the content of this standard

i) has any issues related to 3rd party IPR, patent or copyright
ii) affects other national standard(s)
iii) requires additional national guidance or information

WARNING: THIS IS A DRAFT AND MUST NOT BE REGARDED OR USED AS A BRITISH STANDARD. THIS DRAFT IS NOT CURRENT BEYOND 11 August 2021

This draft is issued to allow comments from interested parties; all comments will be given consideration prior to publication. No acknowledgement will normally be sent. **See overleaf for information on the submission of comments.**

No copying is allowed, in any form, without prior written permission from BSI except as permitted under the Copyright, Designs and Patent Act 1988 or for circulation within a nominating organization for briefing purposes. Electronic circulation is limited to dissemination by e-mail within such an organization by committee members.

Further copies of this draft may be purchased from BSI Shop http://shop.bsigroup.com or from BSI Customer Services, Tel: +44(0) 20 8996 9001 or email cservices@bsigroup.com. British, International and foreign standards are also available from BSI Customer Services.

Information on the co-operating organizations represented on the committees referenced above may be obtained from https://standardsdevelopment.bsigroup.com/.

Responsible Committee Secretary: Committee Service Centre (BSI)
Direct tel: 020 8996 7009
E-mail: csc@bsigroup.com

Documents
Document Sharing Hub
Full document details: 21/30440115 DC

Introduction

This draft standard is based on national and international discussions. Your comments on this draft are invited and will assist in the preparation of the consequent standard.

For international standards, comments will be reviewed by the relevant UK national committee before sending the consensus UK vote and comments to the international committee, which will then decide appropriate action. If the international standard is approved, it is usual for the text to be published as a British Standard.

For national standards, comments will be reviewed by the relevant UK national committee and the resulting standards published as a British Standard.

UK Vote

Please indicate whether you consider the UK should submit a negative (with supporting technical reasons) or positive vote on this draft. Please indicate if you are aware of any reason why this draft standard should not be published as a British Standard.

Submission of Comments

- **Annotated drafts are not acceptable and will be rejected.**
- All comments should be submitted online at **https://standardsdevelopment.bsigroup.com/**. You will need to register in order to comment.

Template for comments and secretariat observations

Date: xx/xx/20xx	Document: ISO/DIS xxxx

1	2	(3)	4	5	(6)	7
MB	Clause No./ Subclause No./Annex **(e.g. 3.1)**	Paragraph/Figure/ Table/Note	**Type of comment**	**Commend (justification for change) by the MB**	**Proposed change by the MB**	**Secretariat observations on each comment submitted**
	3.1	Definition 1	ed	Definition is ambiguous and needs clarifying.	Amend to read '...so that the mains connector to which no connection...'	
	6.4	Paragraph 2	te	The use of the UV photometer as an alternative cannot be supported as serious problems have been encountered in its use in the UK.	Delete reference to UV photometer.	

Documents
Document Sharing Hub

Full document details: 21/30440115 DC

40/2773/CD

COMMITTEE DRAFT (CD)

PROJECT NUMBER: **IEC 60384-14 ED5**	
DATE OF CIRCULATION: **2020-09-04**	CLOSING DATE FOR COMMENTS: **2020-11-27**
SUPERSEDES DOCUMENTS: **40/2655/RR**	

IEC TC 40 : CAPACITORS AND RESISTORS FOR ELECTRONIC EQUIPMENT	
SECRETARIAT: Netherlands	SECRETARY: Mr Ronald Drenthen
OF INTEREST TO THE FOLLOWING COMMITTEES:	PROPOSED HORIZONTAL STANDARD: ☐ Other TC/SCs are requested to indicate their interest, if any, in this CD to the secretary.

FUNCTIONS CONCERNED:

☐ EMC ☐ ENVIRONMENT ☐ QUALITY ASSURANCE ☐ SAFETY

This document is still under study and subject to change. It should not be used for reference purposes.

Recipients of this document are invited to submit, with their comments, notification of any relevant patent rights of which they are aware and to provide supporting documentation.

TITLE:

Fixed capacitors for use in electronic equipment - Part 14: Sectional specification - Fixed capacitors for electromagnetic interference suppression and connection to the supply mains

NOTE FROM TC/SC OFFICERS:

Copyright © 2020 International Electrotechnical Commission, IEC. All rights reserved. It is permitted to download this electronic file, to make a copy and to print out the content for the sole purpose of preparing National Committee positions. You may not copy or "mirror" the file or printed version of the document, or any part of it, for any other purpose without permission in writing from IEC.

Documents
Document Sharing Hub

Full document details: 21/30440115 DC

CONTENTS

FOREWORD 7
1 Scope 9
2 Normative references 9
3 Terms and definitions and classification 10
3.1 Terms and definitions 10
3.2.1 Classification of X capacitors 15
3.2.2 Classification of Y capacitors 16
4 Preferred ratings and characteristics 16
4.1 Preferred characteristics 16
4.1.1 Preferred climatic categories 16
4.2 Preferred values of ratings 17
4.2.1 Nominal capacitance (C_N) 17
4.2.2 Tolerance on nominal capacitance 17
4.2.3 Rated voltage (U_R) 17
4.2.4 Nominal resistance (R_N) 17
4.2.5 Rated temperature 17
4.2.6 Passive flammability 17
4.3 Requirements for sleeving, tape, tubing and wire insulation 18
5 Test and measurement procedures, and performance requirements 18
5.1 General 18
5.2 Visual examination and check of dimensions 18
5.2.1 General 18
5.2.2 Creepage distances and clearances 18
5.3 Electrical tests 19
5.3.1 Voltage proof 19
5.3.2 Capacitance 21
5.3.3 Tangent of loss angle 21
5.3.4 Resistance (Equivalent Series Resistance (ESR)) (for RC units only) 21
5.3.5 Insulation resistance 22
5.4 Robustness of terminations 23
5.5 Resistance to soldering heat 23
5.5.1 General 23
5.5.2 Test conditions 24
5.5.3 Final inspection, measurements and requirements 24
5.6 Solderability 24
5.6.1 General 24
5.6.2 Test conditions 24
5.6.3 Requirements 24
5.7 Rapid change of temperature 25
5.7.1 General 25
5.7.2 Final inspection 25
5.8 Vibration 25
5.8.1 Test conditions 25
5.8.2 Final inspection 25
5.9 Repetitive shock (bump) 25
5.9.1 General 25

AVA Documents
Document Sharing Hub
Full document details: 21/30440115 DC

5.9.2 Test conditions ... 25
5.9.3 Final inspection, measurements and requirements ... 26
5.10 Shock ... 26
5.10.1 General ... 26
5.10.2 Test conditions ... 26
5.10.3 Final inspection, measurements and requirements ... 26
5.11 Container sealing ... 27
5.11.1 General ... 27
5.11.2 Test conditions ... 27
5.11.3 Requirements ... 27
5.12 Climatic sequence ... 27
5.12.1 General ... 27
5.12.2 Initial measurements ... 27
5.12.3 Dry heat ... 27
5.12.4 Damp heat, cyclic, test Db, first cycle ... 27
5.12.5 Cold ... 27
5.12.6 Damp heat, cyclic, test Db, remaining cycles ... 28
5.12.7 Final inspection, measurements and requirements ... 28
5.13 Damp heat, steady state ... 28
5.13.1 General ... 28
5.13.2 Initial measurements ... 28
5.13.3 Test conditions ... 29
5.13.4 Final inspection, measurements and requirements ... 29
5.13.5 Humidity robustness grades ... 29
5.14 Impulse voltage ... 29
5.14.1 General ... 29
5.14.2 Initial measurements ... 29
5.14.3 Test conditions ... 30
5.14.4 Exception for large capacitance value capacitors ... 31
5.15 Endurance ... 31
5.15.1 General ... 31
5.15.2 Test conditions ... 31
5.15.3 Initial measurements ... 32
5.15.4 Endurance for Class X capacitors and RC units containing Class X capacitors ... 32
5.15.5 Endurance for Class Y capacitors and RC units containing Class Y capacitors ... 32
5.15.6 Endurance for the lead-through arrangements ... 33
5.15.7 Test conditions – Combined voltage/current tests ... 33
5.15.8 Final inspection, measurements and requirements ... 33
5.16 Charge and discharge ... 34
5.16.1 General ... 34
5.16.2 Initial measurements ... 34
5.16.3 Test conditions ... 34
5.16.4 Final measurements and requirements ... 34
5.17 Radiofrequency characteristics ... 35
5.18 Passive flammability test ... 35
5.18.1 Testing according to IEC 60384-1 ... 35
5.18.2 Alternative passive flammability test ... 36
5.19 Active flammability test ... 36

AVA Documents
Document Sharing Hub
Full document details: 21/30440115 DC

5.19.2 Adjustment of U_i ... 38
5.19.3 Requirements ... 38
5.20 Component solvent resistance (if applicable) ... 38
5.21 Solvent resistance of the marking ... 38
6 Marking ... 38
6.1 General ... 38
6.2 Information for marking ... 39
6.3 Marking of capacitors ... 39
6.4 Marking of packaging ... 39
6.5 Additional marking ... 39
7 Information to be given in a detail specification ... 39
7.1 General ... 39
7.2 Outline drawing and dimensions ... 40
7.3 Mounting ... 40
7.4 Ratings and characteristics ... 40
7.4.1 General ... 40
7.4.2 Nominal capacitance range ... 40
7.4.3 Nominal resistance range (if applicable) ... 41
7.4.4 Particular characteristics ... 41
8 Assessment procedures ... 41
8.1 Primary stage of manufacture ... 41
8.2 Structurally similar components ... 41
8.3 Certified records of released lots ... 41
8.4 Approval testing ... 41
8.4.1 Safety tests only qualification approval ... 41
8.4.2 Qualification approval based on safety and performance testing ... 42
8.4.3 Qualification approval on the basis of the fixed sample size procedure ... 42
5.14.2 Initial measurements 5.14 Impulse voltage ... 48
8.5 Quality conformance inspection ... 48
8.5.1 General ... 48
8.5.2 Formation of inspection lots ... 49
8.5.3 Test schedule ... 50
8.5.4 Delayed delivery ... 50
8.5.5 Assessment level ... 51
Annex A Circuit for the impulse voltage test (normative) ... 52
Annex B (normative) Circuit for the endurance test ... 53
Annex C (normative) Circuit for the charge and discharge test ... 54
Annex D (normative) Declaration of design (confidential to the manufacturer and the certification body) ... 55
Annex E (informative) Pulse test circuits ... 56
Annex F (normative) Particular requirements for safety test of surface mounting capacitors ... 58
F.1 General ... 58
F.2 Test and measurement procedures ... 58
Annex G (informative) Capacitance ageing of fixed capacitors of ceramic dielectric, Class 2 ... 61
G.1 Overview ... 61
G.2 Law of capacitance ageing ... 61
G.3 Capacitance measurements and capacitance tolerance ... 62

AVA Documents
Document Sharing Hub
Full document details: 21/30440115 DC

G.4 Special preconditioning 62
Annex H (normative) Use of safety approved AC rated capacitors in DC applications 63
H.1 Overview 63
H.2 Background 63
H.3 Terms and definitions 63
H.4 Additional requirement for use of X- and Y-capacitors in DC applications 63
H.5 Creepage and clearance distances 64
Annex I (normative) Humidity robustness grades for applications, where high stability under high humidity operating conditions is required 65
I.1 Overview 65
I.2 Humidity robustness grades 65
I.2.1 Grade (I) robustness under humidity 65
I.2.2 Grade (II) robustness under high humidity 65
I.2.3 Grade (III) high robustness under high humidity 65
I.3 Indication of humidity robustness grades 66
Annex J (informative) Safe use of X and Y capacitors in AC mains up to 400 Hz frequency 67
J.1 Overview 67
J.2 Background 67
J.3 Guidelines 67
J.3.1 Capacitors >10uF 67
J.3.2 Voltage derating with frequency 67
Annex K (informative) Description of capacitor styles and creepage/clearance distance measurement 69
K.1 Overview 69
Annex L (informative) High energy pulse testing method 70
L.1 Overview 70
Annex M 71
(Informative) 71
Safety and performance tests qualification approval 71
M.1 Overview 71
M.2 Qualification approval 71
M.3 Quality conformance inspection 79
M.3.1 General 79
M.3.2 Groups A and B inspection 79
M.3.3 Group C inspection 79
M.3.4 Test schedule for qualification approval 79
Annex X (informative) Cross-references for references to the previous edition of this document 81
Bibliography 86

Documents
Document Sharing Hub
Full document details: 21/30440115 DC

Figure 1 – Two-terminal EMI suppression capacitor 11
Figure 2 – RC unit 11
Figure 3 – Lead-through capacitor (coaxial) 11
Figure 4 – Lead-through capacitors 12
Figure 5 – By-pass capacitors 13
Figure 6 – Impulse wave form 30
Figure 7 – Typical circuit for pulse loading of capacitors under AC voltage 37
Figure 8 – Fundamental AC wave with randomly, not synchronized, superimposed high-voltage pulse 37
Figure A.1 – Impulse voltage test circuit 52
Figure B.1 – Endurance test circuit 53
Figure C.1 – Charge and discharge test circuit 54
Figure E.1 – Charge waveform for both circuits: 56
Figure E.2 – Discharge waveform for inductive circuit: 56
Figure E.3 – Discharge waveform for resistive circuit: 57
Figure F.1 – Example of test substrate for safety test according to Table F.1 60
Figure J.1 – Voltage derating versus frequency 68

Table 1 – Classification of Class X capacitors 15
Table 3 – Creepage distances and clearances 19
Table 4– Voltage proof 20
Table 5 – Insulation resistance – Safety tests only 22
Table 6 – Insulation resistance – Safety and performance tests 23
Table 7 – Resistance to soldering heat – Requirements 24
Table 9 – Climatic sequence – Requirements 28
Table 10 – Damp heat, steady state – Requirements 29
Table 11 – Endurance – Requirements 33
Table 12 – Charge and discharge – Requirements 35
Table 13 – Sampling plan – Tests concerning safety requirements only 44
Table 14 – Test schedule and sampling plan for lot-by-lot tests 45
Table 15 – Test schedule for safety tests only *(1 of 2)* 46
Table 16 – Assessment level 51
Table F.1 – Test schedule and sampling plan for safety test of surface mount capacitors 59
Table H.1 – Additional test conditions 64
Table I.1 – Requirements 66
Table M.1 – Sampling plan – Safety and performance tests qualification approval – Assessment level DZ 72
Table M.2 – Test schedule and sampling plan for lot-by-lot tests 74
Table M.3 – Test schedule for safety and performance tests qualification approval – Assessment level DZ *(1 of 4)* 75
Table M.4 – Assessment level 80
Table X.1 – Reference to IEC 60384-14 for clause/subclause or annex 81
Table X.2 – Reference to IEC 60384-14 for figure/table 85

AVA Documents
Document Sharing Hub
Full document details: 21/30440115 DC

INTERNATIONAL ELECTROTECHNICAL COMMISSION

FIXED CAPACITORS FOR USE IN ELECTRONIC EQUIPMENT –

Part 14: Sectional specification – Fixed capacitors for electromagnetic interference suppression and connection to the supply mains

FOREWORD

1) The International Electrotechnical Commission (IEC) is a worldwide organization for standardization comprising all national electrotechnical committees (IEC National Committees). The object of IEC is to promote international co-operation on all questions concerning standardization in the electrical and electronic fields. To this end and in addition to other activities, IEC publishes International Standards, Technical Specifications, Technical Reports, Publicly Available Specifications (PAS) and Guides (hereafter referred to as "IEC Publication(s)"). Their preparation is entrusted to technical committees; any IEC National Committee interested in the subject dealt with may participate in this preparatory work. International, governmental and non-governmental organizations liaising with the IEC also participate in this preparation. IEC collaborates closely with the International Organization for Standardization (ISO) in accordance with conditions determined by agreement between the two organizations.

2) The formal decisions or agreements of IEC on technical matters express, as nearly as possible, an international consensus of opinion on the relevant subjects since each technical committee has representation from all interested IEC National Committees.

3) IEC Publications have the form of recommendations for international use and are accepted by IEC National Committees in that sense. While all reasonable efforts are made to ensure that the technical content of IEC Publications is accurate, IEC cannot be held responsible for the way in which they are used or for any misinterpretation by any end user.

4) In order to promote international uniformity, IEC National Committees undertake to apply IEC Publications transparently to the maximum extent possible in their national and regional publications. Any divergence between any IEC Publication and the corresponding national or regional publication shall be clearly indicated in the latter.

5) IEC itself does not provide any attestation of conformity. Independent certification bodies provide conformity assessment services and, in some areas, access to IEC marks of conformity. IEC is not responsible for any services carried out by independent certification bodies.

6) All users should ensure that they have the latest edition of this publication.

7) No liability shall attach to IEC or its directors, employees, servants or agents including individual experts and members of its technical committees and IEC National Committees for any personal injury, property damage or other damage of any nature whatsoever, whether direct or indirect, or for costs (including legal fees) and expenses arising out of the publication, use of, or reliance upon, this IEC Publication or any other IEC Publications.

8) Attention is drawn to the Normative references cited in this publication. Use of the referenced publications is indispensable for the correct application of this publication.

9) Attention is drawn to the possibility that some of the elements of this IEC Publication may be the subject of patent rights. IEC shall not be held responsible for identifying any or all such patent rights.

International Standard IEC 60384-14 has been prepared by IEC technical committee 40: Capacitors and resistors for electronic equipment.

This fifth edition is based on the consolidated IEC 60384-14, Ed. 4.1 and constitutes both an editorial and a technical revision. The document structure has been organized to follow new sectional specification structure decided in TC 40.

Most important technical changes are:

a) In damp heat steady state test all capacitor types are tested both with and without rated voltage,

b) Impulse testing is not performed for high capacitance value capacitors,

c) Active flammability test is performed also for Y1 capacitors,

Documents
Document Sharing Hub

Full document details: 21/30440115 DC

d) Tangent of loss angle is added In Group 0 tests, in safety tests only testing;

e) Qualification approval based on safety and performance tests has been removed from the main text to an informative annex

A list of all the parts of the IEC 60384 series, published under the general title *Fixed capacitors for use in electronic equipment,* can be found on the IEC website.

This publication has been drafted in accordance with the ISO/IEC Directives, Part 2.

The committee has decided that the contents of the base publication and its amendment will remain unchanged until the stability date indicated on the IEC web site under "http://webstore.iec.ch" in the data related to the specific publication. At this date, the publication will be

- reconfirmed,
- withdrawn,
- replaced by a revised edition, or
- amended.

Documents
Document Sharing Hub

Full document details: 21/30440115 DC

FIXED CAPACITORS FOR USE IN ELECTRONIC EQUIPMENT –

Part 14: Sectional specification – Fixed capacitors for electromagnetic interference suppression and connection to the supply mains

1 Scope

This part of IEC 60384 applies to capacitors and resistor-capacitor combinations which will be connected to an AC mains or other supply with nominal voltage not exceeding 1 000 V AC (RMS) or 1 500 V DC, and with a nominal frequency not exceeding 100 Hz.

NOTE: In Annex J safe use of capacitors in AC mains up to 400 Hz frequency is described.

The principal object of this part of IEC 60384 is to prescribe preferred ratings and characteristics and to select from IEC 60384-1, the appropriate quality assessment procedures, tests and measuring methods and to give general performance requirements for this type of capacitor. Test severities and requirements prescribed in detail specifications referring to this sectional specification will be of equal or higher performance level; lower performance levels are not permitted.

This document also provides a schedule of safety tests to be used by national testing stations in countries where approval by such stations is required.

The overvoltage categories in combination with the AC mains voltages for the capacitors classified in this document should be taken from IEC 60664-1.

2 Normative references

The following documents are referred to in the text in such a way that some or all of their content constitutes requirements of this document. For dated references, only the edition cited applies. For undated references, the latest edition of the referenced document (including any amendments) applies.

IEC 60060-1:2010, *High-voltage test techniques – Part 1: General definitions and test requirements*

IEC 60063:2015, *Preferred number series for resistors and capacitors*

IEC 60065:2014, *Audio, video and similar electronic apparatus – Safety requirements*
IEC 60068-1:2013, *Environmental testing – Part 1: General and guidance*

IEC 60068-2-17:1994, *Environmental testing – Part 2-17: Tests – Test Q: Sealing*

IEC 60384-1:2016, *Fixed capacitors for use in electronic equipment – Part 1: Generic specification*

IEC 60417:2002, *Graphical symbols for use on equipment*

IEC 60664-1:2007, *Insulation coordination for equipment within low-voltage systems – Part 1: Principles, requirements and tests*

AVA Documents Document Sharing Hub

Full document details: 21/30440115 DC

IEC 60695-11-10:2013, *Fire hazard testing – Part 11-10: Test flames – 50 W horizontal and vertical flame test methods*

IEC 60940:2015, *Guidance information on the application of capacitors, resistors, inductors and complete filter units for radio interference suppression*

IEC 61193-2:2007, *Quality assessment systems – Part 2: Selection and use of sampling plans for inspection of electronic components and packages*

IEC 61210:2010, *Connecting devices – Flat quick-connect terminations for electrical copper conductors – Safety requirements*

CISPR 17:2011, *Methods of measurement of the suppression characteristics of passive EMC filtering devices*

ISO 7000:2004, *Graphical symbols for use on equipment – Index and synopsis*

3 Terms and definitions and classification

3.1 Terms and definitions

For the purposes of this document, the terms and definitions of IEC 60384-1, as well as the following, apply.

ISO and IEC maintain terminological databases for use in standardization at the following addresses:

- IEC Electropedia: available at http://www.electropedia.org/
- ISO Online browsing platform: available at http://www.iso.org/obp

NOTE Some definitions of IEC 60384-1 have been expanded, as is indicated by a note.

3.1.1
AC capacitor
capacitor designed essentially for application with a power-frequency alternating voltage

Note 1 to entry: AC capacitors may be used on DC supplies having the same voltage as the AC RMS rated voltage of the capacitor. For use of AC capacitors in DC supplies, see Annex H

3.1.2
electromagnetic interference suppression capacitor
radio interference suppression capacitor
AC capacitor used for the reduction of electromagnetic interference caused by electrical or electronic apparatus, or other sources

3.1.3
capacitor of Class X
RC unit of Class X
capacitor or RC unit of a type suitable for use in situations where failure of the capacitor or RC unit would not lead to danger of electrical shock but could result in a risk of fire

3.1.4
capacitor of Class Y
RC unit of Class Y
capacitor or RC unit of a type suitable for use in situations where failure of the capacitor could lead to danger of electric shock

Documents
Document Sharing Hub
Full document details: 21/30440115 DC

3.1.5
two-terminal capacitor
electromagnetic interference suppression capacitor having two terminals

NOTE to entry: See Figure 1.

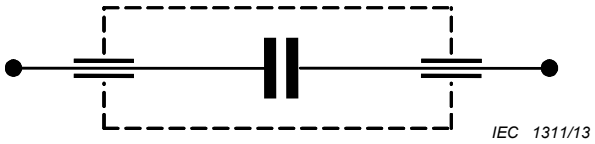

Figure 1 – Two-terminal EMI suppression capacitor

3.1.6
series RC unit
functional combination of a resistor in series with a capacitor of Class X or Y

Note 1 to entry: See Figure 2.

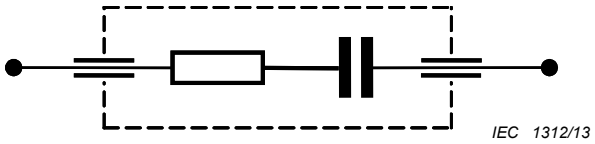

Figure 2 – RC unit

Note 2 to entry: In this document, where the word "capacitor" appears, the words "capacitor or RC unit" should be understood where the context permits.

3.1.7
lead-through capacitor
<coaxial> capacitor with a central current-carrying conductor surrounded by a capacitor element which is symmetrically bonded to the central conductor and to the outer casing to form a coaxial construction; it is coaxially mounted

Noe to entry: See Figure 3.

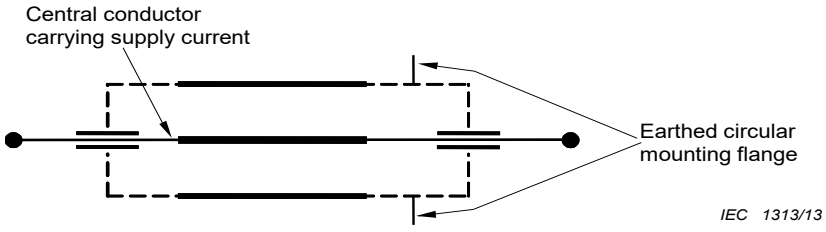

Figure 3 – Lead-through capacitor (coaxial)

3.1.8
lead-through capacitor
<non-coaxial> capacitor in which the supply currents flow through or across the electrodes

Note to entry: See Figures 4 a), 4 b), 4 c) and 4 d).

Documents
Document Sharing Hub
Full document details: 21/30440115 DC

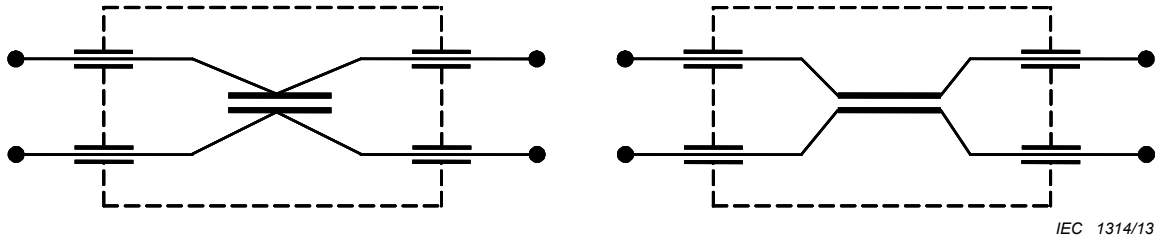

a) – Lead-through capacitor for symmetrical use (non-coaxial)

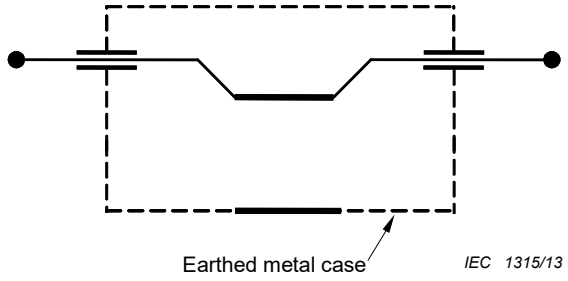

b) – Lead-through capacitor for asymmetrical use (non-coaxial)

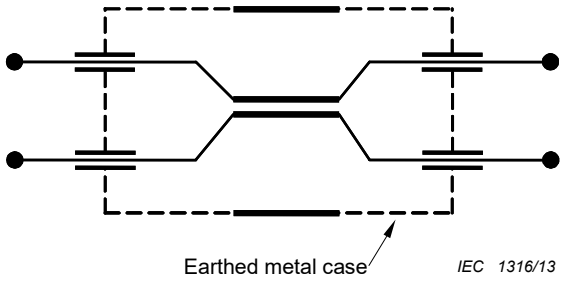

c) – Multiple unit lead-through capacitor (non-coaxial) for symmetrical and asymmetrical use

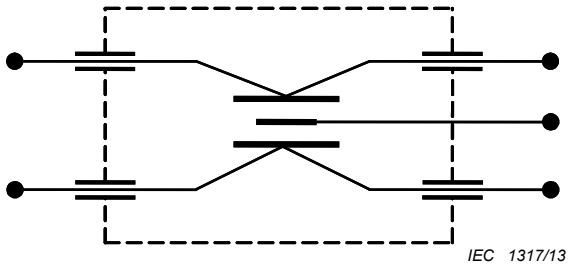

d) – Multiple unit lead-through capacitor

Figure 4 – Lead-through capacitors

3.1.9
by-pass capacitor
capacitor where radiofrequency interference currents are by-passed

Note 1 to entry: There are three common forms: single, delta and T-connected. The single capacitor consists of a capacitor in a metal case with one termination connected to the case as in Figure 5 a); the delta form consists of an X-capacitor and two Y2-capacitors arranged in a delta network as in Figure 5 b); the T-connected form consists of three capacitors C_A, C_B and C_C connected in T as shown in Figure 5 c).

The delta and T-connected forms are electrically equivalent (star-delta transformation). In the T-connected form the X-capacitor is the result of the series connection of C_B – C_C and the Y-capacitors are the results of the series connections of C_A – C_B and C_A – C_C.

Documents
Document Sharing Hub
Full document details: 21/30440115 DC

When T-connected capacitors are submitted to tests, and it is stated that voltages shall be applied across the X-capacitors, such voltages shall be applied between the line and neutral terminations. Similarly, when it is stated that voltages shall be applied across the Y-capacitors, such voltages shall be applied between the line and neutral terminations connected together and the earth termination.

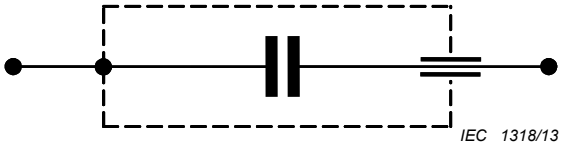

a) – Single by-pass capacitor

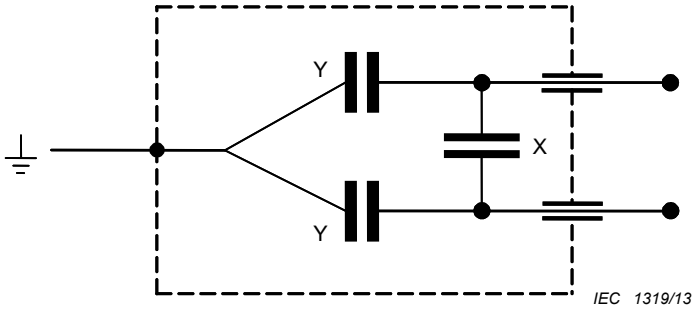

b) – Delta by-pass capacitor (in metallic housing)

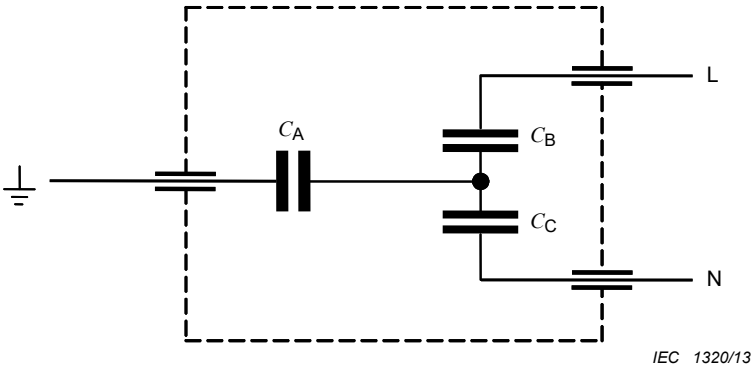

c) – Example of a T-connected by-pass capacitor (in non-metallic housing)

NOTE For capacitors with non-metallic housings, the earth connection is brought out as a separate termination as is shown in Figure 5 c).

Figure 5 – By-pass capacitors

3.1.10
rated voltage
either the RMS operating voltage of rated frequency, or the DC operating voltage, which may be applied continuously to the terminations of a capacitor at any temperature between the lower and the upper category temperatures

Note 1 to entry: This implies, for capacitors covered by this document, that the category voltage is the same as the rated voltage.

3.1.11
rated power
maximum power <of a series RC unit> which can be dissipated by the RC unit at the rated temperature during continuous operation

Documents
Document Sharing Hub
Full document details: 21/30440115 DC

3.1.12
upper category temperature
maximum surface temperature for which the capacitor has been designed to operate continuously

Note 1 to entry: For lead-through capacitors and series RC units, the external surface temperature can be affected by internal heating due to the lead-through current. The terminations of a capacitor are considered to be part of the external surface.

Note 2 to entry: This definition replaces that given in IEC 60384-1:2016, 2.2.41, because suppression capacitors in accordance with this document are intended to be connected to the mains network and may have internal heat generation as a result.

3.1.13
lower category temperature
minimum surface temperature for which the capacitor has been designed to operate continuously

Note 1 to entry: This definition replaces that given in IEC 60384-1:2016, 2.2.10.

3.1.14
rated temperature
maximum ambient temperature <of a lead-through capacitor or series RC unit> at which a lead-through capacitor can carry its rated lead-through current or a series RC unit can dissipate its rated power

Note 1 to entry: This definition replaces that in IEC 60384-1:2016, 2.2.24.

3.1.15
insertion loss
ratio of the voltage before and after the insertion of the suppressor as measured at the terminations

Note 1 to entry: When measured in decibels, the insertion loss is 20 times the logarithm to base 10 of the ratio stated.

3.1.16
rated current of the conductors
In <lead-through capacitor> maximum permissible current flowing through the conductors of the capacitor at the rated temperature during continuous operation

3.1.17
main resonant frequency,
In <two-terminal capacitor> lowest frequency at which the impedance of the capacitor is a minimum when applying a sinusoidal voltage

3.1.18
impulse voltage
periodic transient voltage of a defined waveform as described in IEC 60060-1:2010

3.1.19
passive flammability
ability of a capacitor to burn with a flame as a consequence of the application of an external source of heat

3.1.20
active flammability
ability of a capacitor to burn with a flame as a consequence of electric loading

Documents
Document Sharing Hub
Full document details: 21/30440115 DC

3.2 Classifications

3.2.1 Classification of X capacitors

Class X capacitors are divided into two subclasses (see Table 1) according to the peak voltage of the impulses superimposed on the mains voltage to which they may be subjected in service. Such impulses may arise from lightning strikes on outside lines, from switching in neighbouring equipment, or switching in the equipment in which the capacitor is used.

Table 1 – Classification of Class X capacitors

Subclass	Peak impulse voltage in service	Application	Peak impulse voltage U_P applied before endurance test
X1	>2,5 kV ≤4,0 kV	High pulse application	When $C_N \leq 1{,}0\ \mu F$ $U_P = 4$ kV When $C_N > 1{,}0\ \mu F$ 4
X2	≤2,5 kV	General purpose	When $C_N \leq 1{,}0\ \mu F$ $U_P = 2{,}5$ kV When $C_N > 1{,}0\ \mu F$ 2,5
X1 capacitors may be substituted by Y2 or Y1 capacitors of the same or higher U_R. X2 capacitors can be substituted with X1 or Y2 or Y1 capacitors of the same or higher U_R.			
NOTE 1 The factor used for the reduction of U_P for capacitance values above 1,0 µF maintains $0{,}5 \times C_N U_P^2$ constant for these capacitance values; C_N is in F. NOTE 2 Overvoltage categories in association with rated impulse voltage and rated mains voltage are found in IEC 60664-1. NOTE 3 For demanding industrial applications with high pulse and/or continuous (24h/d/several years) in single phase across the line operation, requiring high stability, X1 capacitors are strongly recommended to be used instead of X2 capacitors. NOTE 4 In 3-phase industrial applications, where across the line filters are built based on three class X capacitors, only X1 capacitors are allowed to be used.			

Documents
Document Sharing Hub
Full document details: 21/30440115 DC

3.2.2 Classification of Y capacitors

Class Y capacitors are further divided into three subclasses, Y1, Y2 and Y4, as shown in Table 2.

Table 2 – Classification of Class Y capacitors

Subclass	Type of insulation bridged	Range of rated voltages	Peak impulse voltage U_P applied before endurance test
Y1	Double insulation or reinforced insulation	≤500 V	U_P = 8,0 kV
Y2	Basic insulation or supplementary insulation	≥150 V ≤500 V	When $C_N \leq 1{,}0\ \mu F$ U_P = 5 kV When $C_N > 1{,}0\ \mu F$ $U_P = \frac{5}{\sqrt{\frac{C_N}{10^{-6}\ F}}}$ kV
Y4	Basic insulation or supplementary insulation	<150 V	U_P = 2,5 kV
Y2 capacitors may be substituted by Y1 capacitors of the same or higher U_R . Y2 capacitors may be substituted by two X2 capacitors, of same capacitance value and same or higher U_R , in series.			
NOTE 1 For definitions of basic, supplementary, double and reinforced insulation, see IEC 61140. NOTE 2 The factor used for the reduction of U_P for capacitance values above 1,0 µF maintains 0,5 × $C_N U_P^2$ constant for these capacitance values; C_N is in F. NOTE 3 Overvoltage categories in association with rated impulse voltage and rated mains voltage are found in IEC 60664-1.			

The enclosure of a Y1-capacitor shall not contain other components.

Assemblies, like Delta by-pass or T-connected by-pass capacitors, may be constructed from Y-capacitors and X-capacitors provided these capacitors fulfil the requirements for the relevant X and Y subclasses.

One Y-capacitor may bridge basic insulation. One Y-capacitor may bridge supplementary insulation. If combined basic and supplementary insulations are bridged by two or more Y2- or Y4-capacitors in series, they shall have the same class and sub-class, the same rated voltage and the same nominal capacitance value.

4 Preferred ratings and characteristics

4.1 Preferred characteristics

The values given in detail specifications shall preferably be selected from 4.1.1.

4.1.1 Preferred climatic categories

The capacitors covered by this document are classified into climatic categories according to the general rules given in IEC 60068-1:2013, Annex A.

AVA Documents Document Sharing Hub

Full document details: 21/30440115 DC

The lower and upper category temperature and the duration of the damp heat, steady state test shall be chosen from the following:

– lower category temperature: –65 °C, –55 °C, –40 °C, –25 °C and –10 °C;
– upper category temperature: +85 °C, +100 °C, +105 °C, +110°C, +125 °C and +155 °C;
– duration of the damp heat, steady state test: 21 and 56 days.

The severities for the cold and dry heat tests are the lower and upper category temperatures respectively.

For guidance on the application of the categories described above, see IEC 60940:2015.

4.2 Preferred values of ratings

4.2.1 Nominal capacitance (C_N)

The preferred values of nominal capacitance are:

1; 1,5; 2,2; 3,3; 4,7; 6,8 and their decimal multiples.

These values conform to the E6 series of preferred values given in IEC 60063:2015.

4.2.2 Tolerance on nominal capacitance

The maximum tolerance on nominal capacitance is ±20 %.

4.2.3 Rated voltage (U_R)

The preferred values of rated voltage are 125 V, 250 V, 275 V, 300 V, 305 V, 310 V, 400 V, 440 V, 500 V, 760 V and 1 000 V.

Electromagnetic interference suppression capacitors should be chosen to have a rated voltage equal to, or greater than, the nominal voltage of the supply system to which they are connected. The design of the capacitors should take into account the possibility that the voltage of the system may rise by up to 10 % above its nominal voltage. In star connections the maximum voltage over the capacitors shall be calculated in the worst possible case when the nominal capacitance tolerances of the capacitors used are considered.

4.2.4 Nominal resistance (R_N)

Preferred values of nominal resistance shall be taken from the E6 series of IEC 60063:201.

4.2.5 Rated temperature

The rated temperature for lead-through capacitors and series RC units shall be not less than +40 °C.

4.2.6 Passive flammability

The preferred category of passive flammability permitted is Category B (see 5.18). If category C is used, it shall be agreed between the component supplier and the customer. See 5.18 also for alternative passive flammability testing.

Exemption: For components smaller than 1 750 mm^3 passive flammability category C is permitted.

Documents
Document Sharing Hub
Full document details: 21/30440115 DC

Passive flammability categories better than C may require flame retardant additives which may be considered to cause environmental impact. These categories should be subject to discussion between manufacturers and customers to find a compromise between safety and environmental requirements.

4.3 Requirements for sleeving, tape, tubing and wire insulation

Sleeving, tape, tubing and wire insulation used in the components falling under this document shall be rated for the voltage involved and the temperature attained under any condition of actual use. Sleeving, tubing and wire insulation shall have flame retardant rating Class VW1. Tape shall be flame retardant.

If insulated terminals are requested, the preferable colours should be transparent or white.

5 Test and measurement procedures, and performance requirements

5.1 General

This clause supplements the information given in IEC 60384-1:2016, Clause 4.

AC tests carried out at a frequency between 50 Hz and 100 Hz are considered valid for any nominal frequency between 50 Hz and 100 Hz. In case of doubt, 50 Hz shall be the reference frequency for measurements.

5.2 Visual examination and check of dimensions

5.2.1 General

See IEC 60384-1:2016, 4.4 with the additional details in 5.2.2.

5.2.2 Creepage distances and clearances

Creepage distances and clearances on the outside of the capacitor between live parts of different polarity or between live parts and a metal case shall be not less than the appropriate values given in Table 3.

Table 3 is based on IEC 60664-1, but equipment safety standards IEC 60335-1, IEC 60065, IEC 60950-1 and IEC 62368-1 have been considered, also. Further information may be obtained from IEC 60664-1.

Table 3 is generated using following environmental conditions as main guideline:

Pollution degree 2, altitude ≤2 000 m and CTI (Comparative Tracking Index) of materials ≥100.

The creepage distances smaller than those in the Table 3 can be used, if rules given in IEC 60664-1 for CTI of materials in components allow that. Creepage distance shall always be larger or equal to clearance distance from this table. Equipment standards may require larger distances than ones given here.

Compliance shall be checked by measurement according to the rules laid down in IEC 60664-1 for measurements on the outside of the capacitor. Additional requirements may be necessary, for example for capacitors intended to be used in other environments than pollution degree 2 (e.g. drip-proof and splash-proof capacitors) or for the use of capacitors in altitudes higher than 2 000 m. See IEC 60664-1 for guidance.

Documents
Document Sharing Hub
Full document details: 21/30440115 DC

Table 3 – Creepage distances and clearances

Points of	Rated voltage (r.m.s.)									
	$U_R \leq 130$ V		130 V < $U_R \leq 250$ V		250 V < $U_R \leq 500$ V		500 V < $U_R \leq 760$ V		760 V < $U_R \leq 1\,000$ V	
	Creepage distance mm	Clear-ance mm	Creepage distance mm	Clear-ance mm	Creepage distance mm	Clear-ance mm	Creepage distance mm	Clear-ance mm	Creepage distance mm	Clearance mm
Between live parts of different polarity (functional insulation) [a]	2,0	1,5	3,0	2,5	4,0	3,0	6,3	5,5	8,0	5,5
Between live parts and other metal parts over basic insulation [b]	2,0	1,5	4,0	3,0	5,0	4,0	6,3	5,5	8,0	7,5
Between live parts and other metal parts over reinforced insulation [c]	8,0	8,0	8,0	8,0	10,0	8,0	12,6	11,0	16,0	11,0
NOTE The reinforced insulation figures for voltages >500 V are given for information only. In this standard Y1 capacitors are limited to 500 V.										
[a] These limits shall be used for measurements between terminals of an X-capacitor.										
[b] These limits shall be used for measurements between each terminal and the metal case of an X-capacitor and for measurements between terminals or between each terminal and the metal case of an Y2- or Y4-capacitor.										
[c] These limits shall be used for measurements between terminals of an Y1- capacitor (up to 500 V).										

Informative Annex K describes different styles of capacitors, and how the creepage and clearance distances are measured for them. Also precautions in handling of the capacitors e.g. when the leads are bent, are described.

5.3 Electrical tests

5.3.1 Voltage proof

5.3.1.1 General

See IEC 60384-1:2008, 4.6, with the details from 5.3.1.2 to 5.3.1.5.

5.3.1.2 Test circuit for DC tests

Omit the capacitor C_1 if the capacitor under test, or a section of it, is a metallized film or metallized paper capacitor.

The product of R_1 and ($C_1 + C_X$) shall be less than, or equal to, 1 s and greater than 0,01 s.

R_1 includes the internal resistance of the power supply.

R_2 shall limit the discharge current to a value equal to, or less than, 0,05 A.

Documents
Document Sharing Hub
Full document details: 21/30440115 DC

5.3.1.3 Test circuit and method for AC tests

When for qualification approval and periodic tests a 50/60 Hz voltage is applied, the voltage shall be supplied from a transformer fed from a variable auto-transformer, and the voltage shall be raised from near zero to the test voltage at a rate not exceeding 150 V/s. The test time shall be counted from the time the test voltage is reached. At the end of the test time the test voltage shall be reduced to near zero and the capacitor discharged through a suitable resistor.

For lot-by-lot and 100 % testing, the voltage shall be applied directly at the full test voltage, but care should be taken to avoid overvoltage peaks.

5.3.1.4 Applied voltage

The voltages of Table 4 shall be applied between the respective measuring points shown in IEC 60384-1:2016, Table 3, for a period of 1 min for qualification approval and periodic testing and for a period of not less than 1 s for lot-by-lot quality conformance testing, with the following details:

a) the test according to 2c of IEC 60384-1:2016, Table 3, shall not be carried out;

a) for encapsulated units with a non-metallic case, a voltage proof test such as Test C shall be carried out only for qualification approval tests and periodic tests;

b) the method of applying the test voltage for Test C shall be given in the detail specification. For qualification testing, the foil method given in IEC 60384-1:2016, 4.6.3.4.2 shall be used, unless otherwise specified in the detail specification;

NOTE This test is applicable only to insulated capacitors in non-metallic case or in insulated metallic case. See IEC 60384-1:2016, 4.6.3.4.

c) for testing during a period between 1 s and 2 s, the voltage of Table 4 shall be increased as indicated in Figure 9.

Attention is drawn to the fact that repetition of the voltage proof test by the user may damage the capacitor. If repetition of the voltage proof test is made by the user, the applied voltage should not be greater than 66 % of the test voltage specified in Table 4.

Table 4– Voltage proof

Class	Range of rated voltages	Test A	Test B or Test C
X1 X2	≤1 000 V	4,3 U_R (DC) [c]	2 U_R + 1 500 V (AC) with a minimum of 2 000 V (AC) [a]
Y1	≤500 V	4 000 V (AC)	4 000 V (AC)
Y2	≥150 V ≤500 V	U_R + 1 200 V (AC) with a minimum of 1 500 V (AC) [b]	2 U_R + 1 500 V (AC) with a minimum of 2 000 V (AC) [b]
Y4	<150 V	900 V (AC) [b]	900 V (AC) [b]

[a] For Delta and T-connected capacitor units according to Figure 5b and Figure 5c, the test voltage for terminals to case shall be the appropriate test voltage for the Y-capacitors.

[b] For lot-by-lot tests of Class Y2- and Y4-capacitors, the AC test voltage may be replaced by a DC voltage of 1,5 times the prescribed AC voltage.

[c] The U_R in this DC test is the rated AC voltage value.

5.3.1.5 Requirements

There shall be no permanent breakdown or flashover during the test period.

AVA Documents Document Sharing Hub

Full document details: 21/30440115 DC

NOTE The occurrence of self-healing breakdowns during the application of the test voltages on metalized film capacitors is allowed.

In visual inspection after the test, the coating of the capacitor shall not have any cracks exposing internal live parts or in defined insulated areas (the creepage and clearance distances shall be maintained)

5.3.2 Capacitance

5.3.2.1 General

See IEC 60384-1:2016, 4.7 with the details in 5.3.2.2 and 5.3.2.3.

5.3.2.2 Measuring conditions

The capacitance measured shall be the series equivalent capacitance.

The measuring frequency shall be 1 kHz, but, only for ceramic capacitors with C_N < 100 pF (class 2) and $C_N \leq$ 1 000 pF (class 1), the measuring frequency shall be 1 MHz.

The measuring temperature shall be in accordance with IEC 60384-1:2008, 4.2.1.

The measuring voltage shall not exceed the rated voltage. For ceramic capacitors the measuring voltage shall be 1,0 V ± 0,2 V.

As the nominal capacitance of ceramic capacitors, as measured above, is the small-signal capacitance, the manufacturer shall supply the following information for ceramic capacitors:

a) the maximum expected 50/60 Hz current through the capacitor at rated voltage taking into account capacitance tolerance and temperature characteristic (or coefficient) of capacitance;

d) the minimum expected capacitance taking into account capacitance tolerance and temperature characteristic (or coefficient) of capacitance.

5.3.2.3 Requirements

The capacitance value shall be within the specified tolerance.

5.3.3 Tangent of loss angle

This test is normally required for metallized and ceramic capacitors only.

See IEC 60384-1:2016, 4.8 with the following details:

The measuring frequency shall be 10 kHz for $C_N \leq$ 1 µF and 1 kHz for C_N > 1 µF. For ceramic capacitors measuring frequency shall be 1 kHz, but for capacitors with C_N < 100 pF (class 2) and $C_N \leq$ 1 000 pF (class 1), the measuring frequency shall be 1 MHz.

5.3.4 Resistance (Equivalent Series Resistance (ESR)) (for RC units only)

The ESR shall be measured in a series equivalent circuit at the following frequency:

100 kHz for $R_N \times C_N$ < 50 µs;

1 kHz for $R_N \times C_N \geq$ 50 µs

where

Documents
Document Sharing Hub
Full document details: 21/30440115 DC

R_N is the nominal resistance in ohms, and

C_N is the nominal capacitance in farads.

5.3.5 Insulation resistance

5.3.5.1 General

See IEC 60384-1:2016, 4.5 with the details in 5.3.5.2 and 5.3.5.3.

In lot-by-lot quality conformance testing the measuring may be interrupted at the time that the value of the insulation resistance exceeds the limits of Table 5 or Table 6, which can be shorter than 60 s.

5.3.5.2 Temperature correction

When prescribed in the detail specification the temperature at which the measurement is made shall be noted. If this temperature differs from 20 °C, a correction shall be made to the measured value by multiplying it by the appropriate correction factor prescribed in the sectional specification for the relevant dielectric, or given in the detail specification.

5.3.5.3 Requirements

The insulation resistance shall exceed the values of Table 5 or Table 6 as appropriate.

Table 5 – Insulation resistance – Safety tests only

Test A		Test B or Test C
When $C_N > 0{,}33$ µF RC_N in s	When $C_N \leq 0{,}33$ µF R in MΩ	R in MΩ
2 000 [a]	6 000	6 000
[a] For capacitors with ester-impregnated paper dielectric, the values of the table shall be replaced respectively by the values 500, 1 500 and 2 000.		

Documents
Document Sharing Hub
Full document details: 21/30440115 DC

Table 6 – Insulation resistance – Safety and performance tests

Dielectric	Test A		Test B or Test C
	When $C_N > 0{,}33\ \mu F$ RC_N in s	When $C_N \leq 0{,}33\ \mu F$ R in MΩ	R in MΩ
Paper [a, b]	2 000	6 000	6 000
Plastic	5 000	15 000	30 000
Ceramic	–	6 000	3 000

REMARKS

- In the Table 11 and Table 12, C_N is the nominal capacitance and R the measured insulation resistance.
- Limits more severe and related to the dielectric may be given in the detail specification for performance tests only, where possible by reference to the appropriate IEC publication.
- For capacitors having one termination connected to the case, the insulation resistance limits for Test A should be used.
- For capacitors with a discharge resistor, measurement should be carried out with the discharge resistor disconnected. If the resistor cannot be disconnected without the capacitor being destroyed, the test should be omitted in Group A; and, for qualification approval and periodic tests, the test should be carried out on half of the specimens in the sample, which should consist of capacitors specially made without discharge resistors.

[a] Also for mixed plastic/paper dielectrics.

[b] For capacitors with ester-impregnated paper dielectric, the values of the table shall be replaced respectively by the values 500, 1 500 and 2 000.

5.4 Robustness of terminations

See IEC 60384-1:2016, 4.13 with the following details.

The test method and degree of severity to be used shall be specified in the detail specification.

The test for snap-in contacts shall be specified in the detail specification; the test methods and severity shall comply with the applicable parts of IEC 61210.

The test shall be conducted such a way that the coating of the capacitor is not broken due to mishandling of the part. In visual inspection after the test the coating of the capacitor shall not have any cracks exposing internal live parts or in defined insulated areas (the creepage and clearance distances shall be maintained)

5.5 Resistance to soldering heat

5.5.1 General

This test is not applicable to capacitors with insulated leads longer than 10 mm, or to capacitors with terminations not intended to be soldered (such as screw and fast-on terminations).

When preconditioning is performed, initial measurements shall be carried out after preconditioning.

When, for fixed capacitors of ceramic dielectric Class 2, a precise measurement of capacitance drift is required, preconditioning should be performed as advised by the manufacturer (see Annex G).

See IEC 60384-1:2016, 4.14 with the details in 5.5.2 and 5.5.3.

AVA Documents Document Sharing Hub

Full document details: 21/30440115 DC

5.5.2 Test conditions

There shall be no pre-drying.

5.5.3 Final inspection, measurements and requirements

The final measurements after this test are the intermediate measurements after the tests of Subgroup 1A and before the remainder of the tests of Group 1. The capacitors shall be visually examined and measured and shall meet the requirements of Table 7.

Table 7 – Resistance to soldering heat – Requirements

Inspection or measurement	Inspection or measuring method	Requirements
Visual examination	5.2	No visible damage. In visual inspection after the test the coating of the capacitor shall not have any cracks exposing internal live parts or in defined insulated areas (the creepage and clearance distances shall be maintained)
Capacitance	5.3.2	The difference between the capacitance measured finally and in Group 0 of Table 13, or Table 14 shall not exceed 5 % [a]
Resistance (if applicable)	5.3.4	$\lvert \Delta R/R \rvert \leq 5$ %
[a] For ceramic capacitors the capacitance difference shall not exceed 10 %.		

5.6 Solderability

5.6.1 General

This test is not applicable to capacitors with terminations not intended for soldering (such as screw terminations and snap-in contacts).

See IEC 60384-1:2016, 4.15 with the details in 5.6.2 and 5.6.3.

5.6.2 Test conditions

No ageing is required.

Temperature of the solder bath and process time for preferred solders:

- SnPb solder: 235 °C ± 3 °C for (2 ± 0,2) s;
- Sn96,5Ag3Cu,5 solder: 245 °C ± 3 °C for (3 ± 0,3) s;
- Sn99,3Cu,7 solder: 250 °C ± 3 °C for (3 ± 0,3) s.

When Method 2 is used, a soldering iron of size A shall be used.

5.6.3 Requirements

See Table 17.

Documents
Document Sharing Hub
Full document details: 21/30440115 DC

5.7 Rapid change of temperature

5.7.1 General

When for fixed capacitors of ceramic dielectric, Class 2 a precise measurement of capacitance drift is required, preconditioning should be performed as advised by the manufacturer (see Annex G).

When preconditioning is performed, initial measurements shall be carried out after preconditioning.

See IEC 60384-1:2016, 4.16 with the following details.

– Number of cycles: 5.

– Duration of exposure at the temperature limits: 30 min, unless otherwise specified in the detail specification for large capacitors.

5.7.2 Final inspection

In visual inspection after the test the coating of the capacitor shall not have any cracks exposing internal live parts or in defined insulated areas (the creepage and clearance distances shall be maintained)

5.8 Vibration

See IEC 60384-1:2016, 4.17 with the details in 5.8.2 and 5.8.3.

5.8.1 Test conditions

The following degree of severity of test Fc applies: 0,75 mm displacement or 100 m/s^2, whichever is the lower amplitude, over one of the following frequency ranges: 10 Hz to 55 Hz, 10 Hz to 500 Hz, 10 Hz to 2 000 Hz. The total duration shall be 6 h.

The detail specification shall prescribe the frequency range and shall also prescribe the mounting method to be used. For capacitors with axial leads which are intended to be mounted by the leads, the distance between the body and the mounting point shall be 6 mm ± 1 mm.

5.8.2 Final inspection

In visual inspection after the test the coating of the capacitor shall not have any cracks exposing internal live parts or in defined insulated areas (the creepage and clearance distances shall be maintained).

5.9 Repetitive shock (bump)

5.9.1 General

The detail specification shall state whether the bump or the shock test applies.

See IEC 60384-1:2016, 4.18 with the details in 5.9.2 and 5.9.3.

5.9.2 Test conditions

The following are the preferred severities.

– Total number of bumps: 1 000 or 4 000

– Acceleration: 400 m/s^2

Documents
Document Sharing Hub

Full document details: 21/30440115 DC