Draft for Public Comment

Form 36

DPC: 23/30462482 DC

BSI Group Headquarters

389 Chiswick High Road London W4 4AL

Tel: +44 (0)20 8996 9000
Fax: +44 (0)20 8996 7400
www.bsigroup.com

Date: 27 July 2023
Origin: European

Latest date for receipt of comments: 19 September 2023

Project No. 2022/02076

Responsible committee: B/505/40 Wastewater Treatment Plants > 50 PT

Interested committees:

Title: Draft BS EN 12255-7 Wastewater treatment plants. Part 7: Biological fixed-film reactors.
Please notify the secretary if you are aware of any keywords that might assist in classifying or identifying the standard or if the content of this standard i) has any issues related to 3rd party IPR, patent or copyright ii) affects other national standard(s) iii) requires additional national guidance or information

WARNING: THIS IS A DRAFT AND MUST NOT BE REGARDED OR USED AS A BRITISH STANDARD. THIS DRAFT IS NOT CURRENT BEYOND 19 September 2023

This draft is issued to allow comments from interested parties; all comments will be given consideration prior to publication. No acknowledgement will normally be sent. **See overleaf for information on the submission of comments.**

No copying is allowed, in any form, without prior written permission from BSI except as permitted under the Copyright, Designs and Patent Act 1988 or for circulation within a nominating organization for briefing purposes. Electronic circulation is limited to dissemination by e-mail within such an organization by committee members.

Further copies of this draft may be purchased from BSI Shop http://shop.bsigroup.com or from BSI Customer Services, Tel: +44(0) 20 8996 9001 or email cservices@bsigroup.com. British, International and foreign standards are also available from BSI Customer Services.

Information on the co-operating organizations represented on the committees referenced above may be obtained from https://standardsdevelopment.bsigroup.com/.

Responsible Committee Secretary: Ms Federica Vitali (BSI)
Direct tel: 0208 996 7944
E-mail: federica.vitali@bsigroup.com

Documents
Document Sharing Hub
Full document details: 23/30462482 DC

Introduction

This draft standard is based on national and international discussions. Your comments on this draft are invited and will assist in the preparation of the consequent standard.

For international standards, comments will be reviewed by the relevant UK national committee before sending the consensus UK vote and comments to the international committee, which will then decide appropriate action. If the international standard is approved, it is usual for the text to be published as a British Standard.

For national standards, comments will be reviewed by the relevant UK national committee and the resulting standards published as a British Standard.

UK Vote

Please indicate whether you consider the UK should submit a negative (with supporting technical reasons) or positive vote on this draft. Please indicate if you are aware of any reason why this draft standard should not be published as a British Standard.

Submission of Comments

- **Annotated drafts are not acceptable and will be rejected.**
- All comments should be submitted online at **https://standardsdevelopment.bsigroup.com/**. You will need to register in order to comment.

Template for comments and secretariat observations

Date: xx/xx/20xx	Document: ISO/DIS xxxx

1	2	(3)	4	5	(6)	7
MB	Clause No./ Subclause No./Annex **(e.g. 3.1)**	Paragraph/ Figure/Table/Note	**Type of comment**	**Commend (justification for change) by the MB**	**Proposed change by the MB**	**Secretariat observations on each comment submitted**
	3.1	Definition 1	ed	Definition is ambiguous and needs clarifying.	Amend to read '...so that the mains connector to which no connection...'	
	6.4	Paragraph 2	te	The use of the UV photometer as an alternative cannot be supported as serious problems have been encountered in its use in the UK.	Delete reference to UV photometer.	

Documents
Document Sharing Hub

Full document details: 23/30462482 DC

EUROPEAN STANDARD

NORME EUROPÉENNE

EUROPÄISCHE NORM

DRAFT
prEN 12255-7

July 2023

ICS 13.060.30

Will supersede EN 12255-7:2002

English Version

Wastewater treatment plants - Part 7: Biological fixed-film reactors

Stations d'épuration - Partie 7: Réacteurs biologiques à cultures fixées

Kläranlagen - Teil 7: Biofilmreaktoren

This draft European Standard is submitted to CEN members for enquiry. It has been drawn up by the Technical Committee CEN/TC 165.

If this draft becomes a European Standard, CEN members are bound to comply with the CEN/CENELEC Internal Regulations which stipulate the conditions for giving this European Standard the status of a national standard without any alteration.

This draft European Standard was established by CEN in three official versions (English, French, German). A version in any other language made by translation under the responsibility of a CEN member into its own language and notified to the CEN-CENELEC Management Centre has the same status as the official versions.

CEN members are the national standards bodies of Austria, Belgium, Bulgaria, Croatia, Cyprus, Czech Republic, Denmark, Estonia, Finland, France, Germany, Greece, Hungary, Iceland, Ireland, Italy, Latvia, Lithuania, Luxembourg, Malta, Netherlands, Norway, Poland, Portugal, Republic of North Macedonia, Romania, Serbia, Slovakia, Slovenia, Spain, Sweden, Switzerland, Türkiye and United Kingdom.

Recipients of this draft are invited to submit, with their comments, notification of any relevant patent rights of which they are aware and to provide supporting documentation.

Warning : This document is not a European Standard. It is distributed for review and comments. It is subject to change without notice and shall not be referred to as a European Standard.

EUROPEAN COMMITTEE FOR STANDARDIZATION
COMITÉ EUROPÉEN DE NORMALISATION
EUROPÄISCHES KOMITEE FÜR NORMUNG

CEN-CENELEC Management Centre: Rue de la Science 23, B-1040 Brussels

© 2023 CEN All rights of exploitation in any form and by any means reserved worldwide for CEN national Members.

Ref. No. prEN 12255-7:2023 E

Documents
Document Sharing Hub

Full document details: 23/30462482 DC

Contents

Page

European foreword 4
Introduction 6
1 Scope 7
2 Normative references 7
3 Terms and definitions 7
4 Symbols and abbreviations 9
5 Planning 9
5.1 Planning principles 9
5.2 Design principles 10
6 Biological fixed film reactors 11
6.1 Types of fixed film reactors 11
6.2 Selection of support media 12
6.3 Biological trickling reactors (BTR) 12
6.3.1 General 12
6.3.2 Support media 15
6.3.3 Dimensioning 15
6.3.4 Flow distribution 16
6.3.5 Ventilation 17
6.3.6 Structures 17
6.3.7 Mechanical equipment 17
6.3.8 Control and automation 17
6.4 Rotating biological contactors (RBC) 17
6.4.1 General 17
6.4.2 Structural requirements 18
6.4.3 Mechanical requirements 19
6.4.4 Support media 19
6.4.5 Dimensioning 20
6.4.6 Flow distribution 22
6.4.7 Oxygen supply 22
6.4.8 Control and automation 22
6.5 Submerged medium reactors (SMR) 22
6.5.1 General 22
6.5.2 Dimensioning 24
6.6 Submerged medium filter (SMF) 25
6.6.1 General 25
6.6.2 Support media 26
6.6.3 Dimensioning 27
6.6.4 Flow distribution 27
6.6.5 Air and oxygen supply 27
6.6.6 Structural requirements 28
6.6.7 Backwashing 28
6.6.8 Control and automation 29
6.7 Moving bed biological reactors (MBBR) 29
6.7.1 General 29

Documents
Document Sharing Hub
Full document details: 23/30462482 DC

6.7.2 Support media 31
6.7.3 Mechanical requirements 31
6.7.4 Dimensioning 31
6.7.5 Control and automation 32

Annex A (informative) Dimensioning of reactors for biological wastewater treatment 33

Bibliography 35

Documents
Document Sharing Hub

Full document details: 23/30462482 DC

European foreword

This document (prEN 12255-7:2023) has been prepared by Technical Committee CEN/TC 165 “Wastewater”, the secretariat of which is held by DIN.

This document is currently submitted to the CEN enquiry.

This document will supersede EN 12255-7:2002.

The main changes in comparison with the previous edition are:

a) comprehensive revision and additions in all sections;

b) addition of design recommendations;

c) addition of moving bed reactors (MBR);

d) adaptation to the current state of the art;

e) updating of the Normative references;

f) editorial revision.

It is the seventh Part prepared by the Working Group CEN/TC 165/WG 40 relating to the general requirements and processes for treatment plants for a total number of inhabitants and population equivalents (PT) over 50. The EN 12255 series with the generic title “Wastewater treatment plants” consists of the following Parts:

— *Part 1: General construction principles*

— *Part 2: Storm management systems*

— *Part 3: Preliminary treatment*

— *Part 4: Primary settlement*

— *Part 5: Lagooning processes*

— *Part 6: Activated sludge process*

— *Part 7: Biological fixed-film reactors*

— *Part 8: Sludge treatment and storage*

— *Part 9: Odour control and ventilation*

— *Part 10: Safety principles*

— *Part 11: General data required*

— *Part 12: Control and automation*

— *Part 13: Chemical treatment — Treatment of wastewater by precipitation/flocculation*

Documents
Document Sharing Hub
Full document details: 23/30462482 DC

— *Part 14: Disinfection*

— *Part 15: Measurement of the oxygen transfer in clean water in aeration tanks of activated sludge plants*

— *Part 16: Physical (mechanical) filtration*

NOTE For requirements on pumping installations at wastewater treatment plants see EN 752, *Drain and sewer systems outside buildings* and the EN 16932 series, *Drain and sewer systems outside buildings — Pumping systems*.

Documents
Document Sharing Hub
Full document details: 23/30462482 DC

Introduction

Differences in wastewater treatment throughout Europe have led to a variety of systems being developed. This document gives fundamental information about the systems; this document has not attempted to specify all available systems.

A generic arrangement of wastewater treatment plants is illustrated in Figure 1 below:

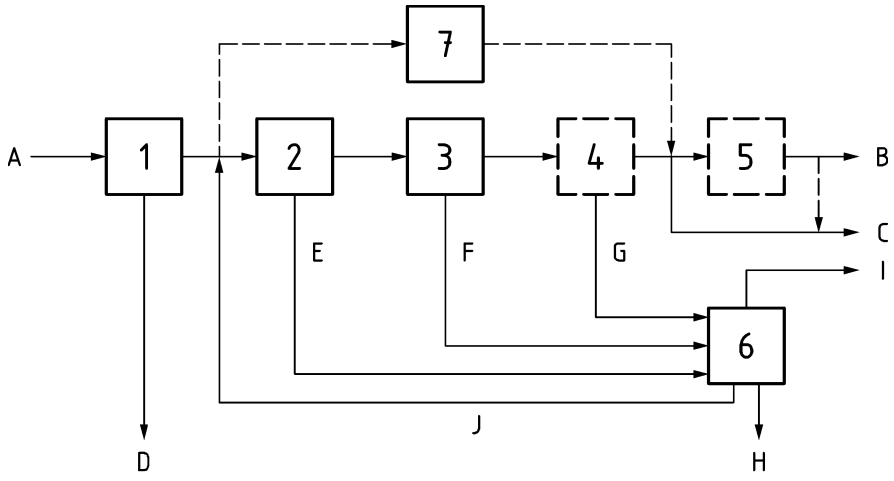

Key

1 preliminary treatment
2 primary treatment
3 secondary treatment
4 tertiary treatment
5 additional treatment (e.g. disinfection or removal of micropollutants)
6 sludge treatment
7 lagoons (as an alternative)
A raw wastewater
B effluent for re-use (e.g. irrigation)
C discharged effluent
D screenings and grit
E primary sludge
F secondary sludge
G tertiary sludge
H digested sludge
I digester gas
J returned water from dewatering

Figure 1 — Schematic diagram of wastewater treatment plants

Detailed information additional to that contained in this document can be obtained by referring to the bibliography.

The primary application is for wastewater treatment plants designed for the treatment of domestic and municipal wastewater.

Documents
Document Sharing Hub
Full document details: 23/30462482 DC

1 Scope

This Part 7 of the EN 12255 series specifies design principles and performance requirements for secondary and tertiary treatment of wastewater in biological fixed-film reactors at wastewater treatment plants for more than 50 PT.

Its primary application is for wastewater treatment plants for the treatment of domestic and municipal wastewater. It can also be applied for biodegradable industrial wastewater.

Biological fixed film reactors include rotating biological contactors (RBC), biological trickling reactors (BTR), moving bed biological reactors (MBBR), submerged medium reactors (SMR) and submerged media filters (SMF). Membrane Bioreactors (MBR) and anaerobic processes are not within the scope.

Some of the systems using fixed film bacteria are enhanced activated sludge systems (hybrid systems). For such systems, EN 12255-6 also applies.

This document provides fundamental information about typical systems and does not provide information about all available fixed film systems.

2 Normative references

The following documents are referred to in the text in such a way that some or all of their content constitutes requirements of this document. For dated references, only the edition cited applies. For undated references, the latest edition of the referenced document (including any amendments) applies.

EN 16323, *Glossary of wastewater engineering terms*

EN 12255-1, *Wastewater treatment plants - Part 1: General construction principles*

EN 12255-6, *Wastewater treatment plants - Part 6: Activated sludge process*

EN 12255-10, *Wastewater treatment plants - Part 10: Safety principles*

EN 12255-11, *Wastewater treatment plants - Part 11: General data required*

3 Terms and definitions

For the purposes of this document, the terms and definitions given in EN 16323 and the following apply.

ISO and IEC maintain terminology databases for use in standardization at the following addresses:

— IEC Electropedia: available at https://www.electropedia.org/

— ISO Online browsing platform: available at https://www.iso.org/obp

3.1
biofilm
layer consisting of microorganisms that forms on a support medium

[SOURCE: EN 16323:2014, term number 2.3.3.3]

Note 1 to entry: Biofilms consist of a complex agglomeration of microorganisms, immobilized in a matrix of polymeric substances. Biofilms grow on the surface of fixed or moving support media or are able to form dense agglomerates.

3.2
biological fixed film rector
reactor containing a support medium on which biomass grows to form a biofilm

Documents
Document Sharing Hub
Full document details: 23/30462482 DC

3.3
biological trickling reactor
BTR
biological fixed film reactor with a bed of support medium through which wastewater percolates

Note 1 to entry: Biological trickling reactors are also called trickling filters.

3.4
flushing intensity
hydraulic surface loading rate onto a trickling reactor divided by the number of arms of a rotary distributor and divided by the number of revolutions per hour

Note 1 to entry: This value gives information on the hydraulic forces to slough excess sludge from the bed.

3.5
moving bed biological reactor
MBBR
biological reactor containing suspended support medium

3.6
rotating biological contactor
RBC
rotating support medium which is intermittently submerged in the flow to be treated

[SOURCE: EN 16323:2014, term number 2.3.3.2]

3.7
submerged medium filter
SMF
dense bed of support medium through which wastewater flows and wherein biofilms grow, which is periodically backwashed to remove excess sludge

Note 1 to entry: The support medium may be granular (e.g. sand, anthracite or activated carbon) or spherical (e.g. small plastic beads).

Note 2 to entry: See also EN 12255-16.

3.8
submerged medium reactor
SMR
biological reactor where support medium is submerged and aerated

3.9
support medium
inert material of various types and specific surface on which an attached biofilm grows

[SOURCE: EN 16323:2014, term number 2.3.8.25]

Documents
Document Sharing Hub
Full document details: 23/30462482 DC

4 Symbols and abbreviations

ATEX	Atmosphere Explosible
BOD_5	Biochemical Oxygen Demand in 5 days
BTR	biological trickling reactors
COD	Chemical Oxygen Demand
MBBR	moving bed biological reactor
NH_4-N^+	ammonium nitrogen
NO_3N	nitrate nitrogen
NO_4-N	nitrate and nitrite nitrogen
TP	total phosphorous
PT	total population
RBC	rotating biological contactors
SBR	sequencing batch reactor
SMF	submerged medium filters
SMR	submerged medium reactors
SS	Suspended Solids
TKN	Total Kjeldahl Nitrogen
VSS	volatile suspended solids

5 Planning

5.1 Planning principles

The following factors shall be considered during the planning phase:

— maximum and minimum dry weather and wet weather inflows;

— pre-treatment requirements;

— effluent consent standards;

— type of reactor and post-treatment (e.g. secondary clarifiers or filters);

— active area of the support medium and its specific biological capacity;

— dimensions of biological reactors;

— requirements to ensure maintenance of units while the consent is still met;

— sludge quality;

— power consumption;

— measurement and control requirements.

Documents
Document Sharing Hub
Full document details: 23/30462482 DC

Fixed film reactors require mechanical wastewater pre-treatment in primary clarifiers or with very fine screens (see EN 12255-4) to avoid clogging of support media. Primary clarifiers shall be designed for a retention time of about 2 hours at average dry weather flow. At peak flow their retention time shall be minimum 30 minutes and their surface flow rate maximum 4 m/h.

It shall be determined whether carbon (BOD_5 and COD) removal is sufficient or whether additional nitrification is required. nitrogen removal requires additional denitrification.

It shall be noted that peak ammonium concentrations in the effluent of fixed film reactors are usually higher than those of activated sludge systems with their bigger reactor volumes. This applies particularly for systems treating combined sewage.

It shall be considered whether parallel units are required and what consent standards shall be met with one unit out of service.

Requirements in EN 12255-1, EN 12255-6, EN 12255-10 and EN 12255-11 shall be considered.

5.2 Design principles

Where removal rates of primary clarifiers or very fine screens cannot be measured, estimates of EN 12255-4 may be used.

The 85-percentiles of the daily COD or BOD_5, TKN, P and SS loads shall be determined over a period of several months. Seasonal fluctuations shall be taken into account. For systems serving a total population of maximum 500 the relevant flows and loads may be estimated.

Where two-hourly TKN peaks exceed double the daily TKN average, means for load balancing are usually required.

Peak TKN and P return loads from sludge treatment shall be taken into account. Balancing of return flows can be required.

The following design parameters shall be considered and shall be appropriate for the type of fixed film reactor:

— volumetric loading of the reactor [kg/(m³·d)] as BOD_5, COD or TKN;

— active surface loading of support media [kg/(m²·d)] as BOD_5, COD or TKN;

— active specific surface of support media (m²/m³);

— recirculation ratio where applicable;

— hydraulic surface loading [m³/(m²·h)] of clarifiers and their required surface area, or the loading of other sludge separation units (e.g. filters);

— required flush or wash water (usually effluent) in % of the wastewater flow;

— specific power consumption [kWh/m³].

All systems shall guarantee uniform flow distribution to parallel units und to the support media.

Sampling points shall be provided at the inlet and outlet of every reactor, such that samples with and without recirculation can be taken.

Unless otherwise agreed, the design service life of the equipment shall be as defined in EN 12255-1:

— Class 3: for motors, geared engines and drive chains;

— Class 4: for central bearings of rotating distributors on trickling reactors;

Documents
Document Sharing Hub
Full document details: 23/30462482 DC