Draft for Public Comment

Form 36

DPC: 23 / 30479676 DC

BSI Group Headquarters

389 Chiswick High Road London W4 4AL

Tel: +44 (0)20 8996 9000
Fax: +44 (0)20 8996 7400
www.bsigroup.com

Date: 07 September 2023
Origin: European

Latest date for receipt of comments: 28 October 2023

Project No. 2021/02451

Responsible committee: CB/203 Design & execution of steel structures

Interested committees:

Title: BS EN 1993-5 Eurocode 3 - Design of steel structures

Part 5: Piling

Please notify the secretary if you are aware of any keywords that might assist in classifying or identifying the standard or if the content of this standard
i) has any issues related to 3rd party IPR, patent or copyright
ii) affects other national standard(s)
iii) requires additional national guidance or information

WARNING: THIS IS A DRAFT AND MUST NOT BE REGARDED OR USED AS A BRITISH STANDARD.
THIS DRAFT IS NOT CURRENT BEYOND 28 October 2023

This draft is issued to allow comments from interested parties; all comments will be given consideration prior to publication. No acknowledgement will normally be sent. **See overleaf for information on the submission of comments.**

No copying is allowed, in any form, without prior written permission from BSI except as permitted under the Copyright, Designs and Patent Act 1988 or for circulation within a nominating organization for briefing purposes. Electronic circulation is limited to dissemination by e-mail within such an organization by committee members.

Further copies of this draft may be purchased from BSI Shop **http://shop.bsigroup.com**
or from BSI Customer Services, Tel: +44(0) 20 8996 9001 or email cservices@bsigroup.com.
British, International and foreign standards are also available from BSI Customer Services.

Information on the co-operating organizations represented on the committees referenced above may be obtained from
http://standardsdevelopment.bsigroup.com

Responsible Committee Secretary: **Mr Christopher Starr (BSI)**
Direct tel:
E-mail: **christopher.starr@bsigroup.com**

Documents
Document Sharing Hub

Full document details: 23/30479676 DC

Introduction

This draft standard is based on national and international discussions. Your comments on this draft are invited and will assist in the preparation of the consequent standard.

For international standards, comments will be reviewed by the relevant UK national committee before sending the consensus UK vote and comments to the international committee, which will then decide appropriate action. If the international standard is approved, it is usual for the text to be published as a British Standard.

For national standards, comments will be reviewed by the relevant UK national committee and the resulting standards published as a British Standard.

UK Vote

Please indicate whether you consider the UK should submit a negative (with supporting technical reasons) or positive vote on this draft. Please indicate if you are aware of any reason why this draft standard should not be published as a British Standard.

Submission of Comments

- **Annotated drafts are not acceptable and will be rejected.**
- All comments should be submitted online at **https://standardsdevelopment.bsigroup.com/**. You will need to register in order to comment.

Template for comments and secretariat observations

Date: xx/xx/20xx	Document: ISO/DIS xxxx

1	2	(3)	4	5	(6)	7
MB	Clause No./ Subclause No./Annex **(e.g. 3.1)**	Paragraph/Figure/ Table/Note	**Type of comment**	**Commend (justification for change) by the MB**	**Proposed change by the MB**	**Secretariat observations on each comment submitted**
	3.1	Definition 1	ed	Definition is ambiguous and needs clarifying.	Amend to read '...so that the mains connector to which no connection...'	
	6.4	Paragraph 2	te	The use of the UV photometer as an alternative cannot be supported as serious problems have been encountered in its use in the UK.	Delete reference to UV photometer.	

Documents
Document Sharing Hub

Full document details: 23/30479676 DC

EUROPEAN STANDARD

NORME EUROPÉENNE

EUROPÄISCHE NORM

DRAFT
prEN 1993-5

September 2023

ICS 91.010.30; 91.080.13

Will supersede EN 1993-5:2007

English Version

Eurocode 3 - Design of steel structures - Part 5: Piling

Eurocode 3 - Calcul des structures en acier - Partie 5: Pieux et palplanches

Eurocode 3 - Bemessung und Konstruktion von Stahlbauten - Teil 5: Pfähle und Spundwände

This draft European Standard is submitted to CEN members for enquiry. It has been drawn up by the Technical Committee CEN/TC 250.

If this draft becomes a European Standard, CEN members are bound to comply with the CEN/CENELEC Internal Regulations which stipulate the conditions for giving this European Standard the status of a national standard without any alteration.

This draft European Standard was established by CEN in three official versions (English, French, German). A version in any other language made by translation under the responsibility of a CEN member into its own language and notified to the CEN-CENELEC Management Centre has the same status as the official versions.

CEN members are the national standards bodies of Austria, Belgium, Bulgaria, Croatia, Cyprus, Czech Republic, Denmark, Estonia, Finland, France, Germany, Greece, Hungary, Iceland, Ireland, Italy, Latvia, Lithuania, Luxembourg, Malta, Netherlands, Norway, Poland, Portugal, Republic of North Macedonia, Romania, Serbia, Slovakia, Slovenia, Spain, Sweden, Switzerland, Türkiye and United Kingdom.

Recipients of this draft are invited to submit, with their comments, notification of any relevant patent rights of which they are aware and to provide supporting documentation.

Warning : This document is not a European Standard. It is distributed for review and comments. It is subject to change without notice and shall not be referred to as a European Standard.

EUROPEAN COMMITTEE FOR STANDARDIZATION
COMITÉ EUROPÉEN DE NORMALISATION
EUROPÄISCHES KOMITEE FÜR NORMUNG

CEN-CENELEC Management Centre: Rue de la Science 23, B-1040 Brussels

© 2023 CEN All rights of exploitation in any form and by any means reserved worldwide for CEN national Members.

Ref. No. prEN 1993-5:2023 E

Documents
Document Sharing Hub

Full document details: 23/30479676 DC

Contents

Page

European foreword 7
0 Introduction 8
1 Scope 11
1.1 Scope of EN 1993-5 11
1.2 Assumptions 11
2 Normative references 12
3 Terms, definitions, symbols 13
3.1 Terms and definitions 13
3.1.1 Terms and definitions for piles 13
3.1.2 Terms and definitions relating to anchors, tension piles and waling 16
3.2 Symbols 22
3.2.1 General 22
3.2.2 Latin upper-case symbols 23
3.2.3 Latin lower-case symbols 25
3.2.4 Greek symbols 26
3.3 Convention for sheet pile axes 28
4 Basis of design 29
4.1.1 Basic requirements 29
4.1.2 Structural reliability and consequences of failure 30
4.1.3 Robustness 30
4.1.4 Design service life 31
4.1.5 Durability 31
4.1.6 Sustainability 31
4.2 Principles of limit state design 31
4.2.1 Design situations 31
4.2.2 Ultimate limit state criteria 31
4.2.3 Serviceability limit state criteria 32
4.3 Basic variables 33
4.3.1 Actions and environmental influences 33
4.3.2 Material and product properties and geometrical data 34
4.4 Verification by the partial factor method 34
4.4.1 Design values of actions 34
4.4.2 Design values of material properties 34
4.4.3 Design values of geometrical properties 34
4.4.4 Construction tolerances 34
4.4.5 Imperfections 34
4.5 Driveability 34
4.6 Design assisted by finite element analysis 35
4.6.1 General 35
4.6.2 Secondary elements 35
4.7 Design assisted by testing 35
4.8 Verification by observational method 36
4.9 Fatigue 36
5 Materials 36
5.1 General 36
5.2 Material properties for steel piles 36
5.2.1 Strength of bearing piles 36
5.2.2 Strength of hot rolled sheet piles 37

Documents
Document Sharing Hub
Full document details: 23/30479676 DC

5.2.3 Strength of cold formed sheet piles ... 37
5.2.4 Strength of steel members used for combined walls ... 37
5.2.5 Ductility of steel piles ... 38
5.2.6 Fracture toughness of steel piles ... 38
5.3 Interlocks and connecting devices ... 39
5.4 Material properties for steel elements used for anchors and tension piles ... 39
5.4.1 General ... 39
5.4.2 Anchor tension elements ... 39
5.4.3 Ductility of anchors and tension piles ... 40
5.5 Material properties for steel members used for bracing ... 40

6 Durability ... 40
6.1 General ... 40
6.2 Durability requirements for piling ... 42
6.3 Durability requirements for anchors and tension piles ... 43
6.4 Corrosion rates for design ... 43
6.4.1 Corrosion rates for design in soil and water ... 43
6.4.2 Corrosion rates for design due to mechanical wearing ... 45
6.4.3 Corrosion due to stray currents ... 46
6.4.4 Corrosion rates for design in atmospheric environment ... 46

7 Structural analysis ... 46
7.1 Structural modelling ... 46
7.1.1 Modelling of the structure ... 46
7.1.2 Modelling of anchors, tension piles, walings, bracing and connections ... 46
7.2 Global analysis for ultimate limit state design checks ... 47
7.3 Imperfections ... 51
7.4 Methods of analysis considering material nonlinearities ... 52
7.5 Classification of cross-sections ... 52
7.5.1 Classification of U, Z and Ω sheet piles ... 52
7.5.2 Classification of other cross-sections ... 53

8 Ultimate limit state ... 53
8.1 General ... 53
8.2 Partial factors ... 54
8.3 Sheet piling ... 54
8.3.1 Bending resistance of sheet piling considering shear lag ... 54
8.3.2 Shear resistance of sheet piling ... 57
8.3.3 Resistance of sheet piling for combined bending, shear and axial force ... 59
8.3.4 Buckling of sheet piling in bending and axial compression ... 60
8.3.5 Local effects of water pressure ... 63
8.3.6 Concentrated load introduction ... 64
8.4 Bearing piles ... 67
8.4.1 General ... 67
8.4.2 Design methods and design considerations ... 67
8.4.3 Buckling of bearing piles ... 68
8.4.4 Verification of steel piles filled with concrete ... 69
8.5 High modulus walls ... 69
8.6 Jagged walls ... 70
8.7 Combined walls ... 70
8.7.1 General ... 70
8.7.2 Secondary elements ... 70
8.7.3 Connectors ... 72
8.7.4 Primary elements ... 72
8.8 H-piles used as primary elements ... 73

AVA Documents
Document Sharing Hub

Full document details: 23/30479676 DC

8.8.1 General 73
8.8.2 H-piles in axial compression and bending 73
8.8.3 Lateral torsional buckling of H-piles 74
8.8.4 Shear buckling of H-piles 78
8.8.5 The combined effect of member forces and flange bending 78
8.9 Tubular sections used as primary elements 80
8.9.1 General 80
8.9.2 Tubular piles in bending and shear 81
8.9.3 Tubular piles in axial compression and bending 81
8.9.4 Buckling of tubular piles 81
8.9.5 Effects of transverse loads 82
8.9.6 The combined effect of member forces and circumferential bending 84
8.9.7 The effect of circumferential deformation on member resistance 85
8.9.8 Flexibility and ductility of the tubular piles 87
8.10 Straight web steel sheet piles 88
8.10.1 General 88
8.10.2 Verification of junction piles 89
8.11 Anchors and tension piles 90
8.11.1 General 90
8.11.2 Design resistance of tension elements for anchors 91
8.11.3 Anchors and tension piles subject to proof testing 93
8.12 Walings and bracings 94
8.13 Connections 94

9 Serviceability limit state 96
9.1 Basis 96
9.2 Displacements of retaining walls 96
9.3 Displacements of bearing piles 96
9.4 Structural aspects of steel sheet piling 97
9.5 Anchors and tension piles 97

Annex A (normative) Cold formed and class 4 steel sheet piles 98

A.1 Use of this annex 98

A.2 Scope and field of application 98

A.3 General 98

A.3.1 Form of cold formed steel sheet piles 98

A.3.2 Terminology 99

A.4 Basis of design 99

A.4.1 Ultimate limit states 99

A.4.2 Serviceability limit states 99

A.5 Properties of materials and cross-sections 99

A.5.1 Material properties 99

A.5.2 Section properties 100

A.6 Local buckling 101

A.7 Resistance of cross-sections 103

A.7.1 General 103

A.7.2 Bending moment 104

Documents
Document Sharing Hub

Full document details: 23/30479676 DC

A.7.3 Shear force ... 104
A.7.4 Local transverse forces ... 105
A.7.4.1 General ... 105
A.7.4.2 Webs subject to transverse compressive forces ... 105
A.7.4.3 Webs subject to transverse tensile forces ... 105
A.7.5 Combined shear force and bending moment ... 105
A.7.6 Combined bending moment and local transverse forces ... 106
A.7.7 Combined bending moment and axial force ... 106
A.7.8 Local transverse bending ... 106
A.8 Design by calculation ... 107
Annex B (normative) Testing of class 4 steel sheet piles ... 108
B.1 Use of this annex ... 108
B.2 Scope and field of application ... 108
B.3 General ... 108
B.4 Tests on material ... 109
B.5 Cross-sectional data based on testing ... 109
B.6 Single span beam test ... 109
B.7 Intermediate support test ... 110
B.8 Double span beam test ... 111
B.9 Evaluation of test results ... 112
B.9.1 General ... 112
B.9.2 Adjustment of test results ... 112
B.9.3 Characteristic values ... 112
B.9.4 Design values ... 112
Annex C (normative) Conditions for use of plastic analysis and elasto-plastic verification for sheet pile walls ... 113
C.1 Use of this annex ... 113
C.2 Scope and field of application ... 113
C.3 Type of analysis ... 113
C.3.1 General ... 113
C.3.2 Use of nonlinear behaviour for determination of the bending moment ... 113
C.4 Flexural capacity of cross sections ... 114
C.4.1 Determination of required rotational capacity ... 115
Annex D (normative) Reference resistance design formulas for class 3 and 4 manufactured tubular piles loaded in longitudinal bending ... 119
D.1 Use of this annex ... 119
D.2 Scope and field of application ... 119

AVA Documents
Document Sharing Hub

Full document details: 23/30479676 DC

D.3 Section resistance 120
D.4 Buckling strength verification 120
D.5 Buckling parameters 121
Annex E (normative) Properties of semi-compact sections 123
E.1 Scope and field of application 123
E.2 Section properties 123
Annex F (informative) Typical grades of reinforcing and prestressing steels used for tension elements 124
F.1 Use of this annex 124
F.2 Scope and field of application 124
Bibliography 126

Documents
Document Sharing Hub
Full document details: 23/30479676 DC

European foreword

This document (prEN 1993-5:2023) has been prepared by Technical Committee CEN/TC 250 “Structural Eurocodes”, the secretariat of which is held by BSI. CEN/TC 250 is responsible for all Structural Eurocodes and has been assigned responsibility for structural and geotechnical design matters by CEN.

This document is currently submitted to the CEN Enquiry.

This document will supersede EN 1993-5:2007.

The first generation of EN Eurocodes was published between 2002 and 2007. This document forms part of the second generation of the Eurocodes, which have been prepared under Mandate M/515 issued to CEN by the European Commission and the European Free Trade Association.

The Eurocodes have been drafted to be used in conjunction with relevant execution, material, product and test standards, and to identify requirements for execution, materials, products and testing that are relied upon by the Eurocodes.

The Eurocodes recognize the responsibility of each Member State and have safeguarded their right to determine values related to regulatory safety matters at national level through the use of National Annexes.

Documents
Document Sharing Hub

Full document details: 23/30479676 DC

0 Introduction

0.1 Introduction to the Eurocodes

The Structural Eurocodes comprise the following standards generally consisting of a number of Parts:

- EN 1990 Eurocode: Basis of structural and geotechnical design
- EN 1991 Eurocode 1: Actions on structures
- EN 1992 Eurocode 2: Design of concrete structures
- EN 1993 Eurocode 3: Design of steel structures
- EN 1994 Eurocode 4: Design of composite steel and concrete structures
- EN 1995 Eurocode 5: Design of timber structures
- EN 1996 Eurocode 6: Design of masonry structures
- EN 1997 Eurocode 7: Geotechnical design
- EN 1998 Eurocode 8: Design of structures for earthquake resistance
- EN 1999 Eurocode 9: Design of aluminium structures
- New parts are under development, e.g. Eurocode for design of structural glass

The Eurocodes are intended for use by designers, clients, manufacturers, constructors, relevant authorities (in exercising their duties in accordance with national or international regulations), educators, software developers, and committees drafting standards for related product, testing and execution standards.

NOTE Some aspects of design are most appropriately specified by relevant authorities or, where not specified, can be agreed on a project-specific basis between relevant parties such as designers and clients. The Eurocodes identify such aspects making explicit reference to relevant authorities and relevant parties.

0.2 Introduction to EN 1993 (all parts)

EN 1993 (all parts) applies to the design of buildings and civil engineering works in steel. It complies with the principles and requirements for the safety and serviceability of structures, the basis of their design and verification that are given in EN 1990 – Basis of structural and geotechnical design.

EN 1993 (all parts) is concerned only with requirements for resistance, serviceability, durability and fire resistance of steel structures. Other requirements, e.g. concerning thermal or sound insulation, are not covered.

EN 1993 is subdivided in various parts:

EN 1993-1, *Design of steel structures — Part 1: General rules and rules for buildings;*

EN 1993-2, *Design of steel structures — Part 2: Bridges;*

EN 1993-3, *Design of steel structures — Part 3: Towers, masts and chimneys;*

EN 1993-4, *Design of steel structures — Part 4: Silos and tanks;*

EN 1993-5, *Design of steel structures — Part 5: Piling;*

Documents
Document Sharing Hub
Full document details: 23/30479676 DC

EN 1993-6, *Design of steel structures — Part 6: Crane supporting structures;*

EN 1993-7, *Design of steel structures — Part 7: Sandwich panels* (under preparation).

EN 1993-1 in itself does not exist as a physical document, but comprises the following 14 separate parts, the basic part being EN 1993-1-1:

EN 1993-1-1, *Design of steel structures — Part 1-1: General rules and rules for buildings;*

EN 1993-1-2, *Design of steel structures — Part 1-2: Structural fire design;*

EN 1993-1-3, *Design of steel structures — Part 1-3: Cold-formed members and sheeting;*

NOTE Cold-formed hollow sections supplied according to EN 10219 (all parts) are covered in EN 1993-1-1.

EN 1993-1-4, *Design of steel structures — Part 1-4: Stainless steel structures;*

EN 1993-1-5, *Design of steel structures — Part 1-5: Plated structural elements;*

EN 1993-1-6, *Design of steel structures — Part 1-6: Strength and stability of shell structures;*

EN 1993-1-7, *Design of steel structures — Part 1-7: Plate assemblies with elements under transverse loads;*

EN 1993-1-8, *Design of steel structures — Part 1-8: Joints;*

EN 1993-1-9, *Design of steel structures — Part 1-9: Fatigue;*

EN 1993-1-10, *Design of steel structures — Part 1-10: Material toughness and through-thickness properties;*

EN 1993-1-11, *Design of steel structures — Part 1-11: Tension components;*

EN 1993-1-12, *Design of steel structures — Part 1-12: Additional rules for steel grades up to S960;*

EN 1993-1-13, *Design of steel structures — Part 1-13: Rules for beams with large web openings;*

EN 1993-1-14, *Design of steel structures — Part 1-14: Design assisted by finite element analysis* (under preparation).

All subsequent parts EN 1993-1-2 to EN 1993-1-14 treat general topics that are independent from the structural type like structural fire design, cold-formed members and sheeting, stainless steels, plated structural elements, etc.

All subsequent parts numbered EN 1993-2 to EN 1993-7 treat topics relevant for a specific structural type like steel bridges, towers, masts and chimneys, silos and tanks, piling, crane supporting structures, etc. EN 1993-2 to EN 1993-7 refer to the generic rules in EN 1993-1 and supplement, modify or supersede them, where relevant.

0.3 Introduction to EN 1993-5

EN 1993-5 gives design rules for steel sheet piling and bearing piles to supplement the generic rules in EN 1993-1. The focus in EN 1993-5 is on design rules that supplement, modify or supersede the equivalent provisions given in EN 1993-1

EN 1993-5 is intended to be used with Eurocodes EN 1990 - Basis of structural and geotechnical design, EN 1991 - Actions on structures and EN 1997 - Geotechnical Design.

0.4 Verbal forms used in the Eurocodes

The verb “shall” expresses a requirement strictly to be followed and from which no deviation is permitted in order to comply with the Eurocodes.

The verb “should” expresses a highly recommended choice or course of action. Subject to national regulation and/or any relevant contractual provisions, alternative approaches could be used/adopted where technically justified.

Documents
Document Sharing Hub
Full document details: 23/30479676 DC

The verb “may” expresses a course of action permissible within the limits of the Eurocodes.

The verb “can” expresses possibility and capability; it is used for statements of fact and clarification of concepts.

0.5 National annex for EN 1993-5

National choice is allowed in this standard where explicitly stated within notes. National choice includes the selection of values for Nationally Determined Parameters (NDPs).

The national standard implementing EN 1993-5 can have a National Annex containing all national choices to be used for the design of buildings and civil engineering works to be constructed in the relevant country.

When no national choice is given, the default choice given in this standard is to be used.

When no national choice is made and no default is given in this standard, the choice can be specified by the relevant authority or, where not specified, agreed for a specific project by the relevant parties.

National choice is allowed in prEN 1993-5 through notes to the following:

4.1.3 (2)	4.6.1 (2)	4.6.2 (2)	5.2.6 (1)
6.4.1 (1)	6.4.4 (1)	7.4. (2)	8.2 (1)
8.2 (2)	8.2 (3)	8.3.1 (2)	8.11.2 (1)
9.4 (4)			

National choice is allowed in EN 1993-5 on the application of the following informative annexes:

Annex F

The National Annex can contain, directly or by reference, non-contradictory complementary information for ease of implementation, provided it does not alter any provisions of the Eurocodes.

Documents
Document Sharing Hub
Full document details: 23/30479676 DC

1 Scope

1.1 Scope of EN 1993-5

(1) EN 1993-5 provides rules for structural design of bearing piles and sheet piles made of steel.

(2) EN 1993-5 provides rules for the structural design of steel elements for foundations and retaining structures constructed using steel piles.

(3) EN 1993-5 is applicable to:

— steel piled foundations for civil engineering works on land and over water;

— temporary or permanent structures needed to carry out steel piling work;

— temporary and permanent retaining structures made of continuous steel piling.

(4) EN 1993-5 does not apply to:

— offshore platforms;

— dolphins;

— ground reinforcing elements.

NOTE Ground reinforcing elements include rock bolts; soil nails; sprayed concrete; wire mesh and facing elements.

(5) EN 1993-5 does not cover the following aspects:

— geotechnical design;

— seismic design.

NOTE 1 For geotechnical design see prEN 1997 (all parts).

NOTE 2 For the effects of ground movement caused by earthquakes see EN 1998.

(6) EN 1993-5 provides methods for design by calculation and for design assisted by testing.

1.2 Assumptions

(1) Unless specifically stated, EN 1990, EN 1991 (all parts), EN 1993-1 (all parts) and EN 1997 (all parts) apply.

(2) The design methods given in EN 1993-5 are applicable if

— the execution quality for steel piles is as specified in EN 12063, EN 12699, EN 14199 and

— the execution quality for associated steel elements (such as bracing, anchors, waling, etc.) is as specified in EN 1090-2, EN 1537 and

— the execution quality for concreting of bearing piles is as specified in EN 1536 and

— the construction materials and products used are as specified in the relevant parts of EN 1993 (all parts), or in the relevant material and product specifications.

Documents
Document Sharing Hub
Full document details: 23/30479676 DC

(3) The methods for design by calculation apply only within the stated ranges of material properties and geometric proportions, for which sufficient experience and test evidence is available. These limitations do not apply to design assisted by testing.

2 Normative references

The following documents are referred to in the text in such a way that some or all of their content constitutes requirements of this document. For dated references, only the edition cited applies. For undated references, the latest edition of the referenced document (including any amendments) applies.

NOTE See the Bibliography for a list of other documents cited that are not normative references, including those referenced as recommendations (i.e. in 'should' clauses), permissions ('may' clauses), possibilities ('can' clauses), and in notes.

EN 1090-2, *Execution of steel structures and aluminium structures — Part 2: Technical requirements for steel structures*

EN 1536, *Execution of special geotechnical work — Bored piles*

EN 1537, *Execution of special geotechnical works — Ground anchors*

EN 1990:2023, *Eurocode — Basis of structural and geotechnical design*

EN 1991 (all parts), *Eurocode 1 — Actions on structures*

prEN 1992-1-1:2021, *Eurocode 2 — Design of concrete structures – Part 1-1: General rules and rules for buildings, bridges and civil engineering structures*

EN 1993-1, (all parts), *Eurocode 3 — Design of steel structures*

prEN 1994-1-1:202x, *Eurocode 4 — Design of composite steel and concrete structures — 1-1: General rules and rules for buildings (under development)*

EN 1997 (all parts), *Eurocode 7 — Geotechnical design*

EN 10210 (all parts), *Hot finished steel structural hollow sections*

EN 10219 (all parts), *Cold formed welded steel structural hollow sections*

EN 10248 (all parts), *Hot-rolled steel sheet piles*

EN 10249 (all parts), *Cold formed steel sheet piling*

EN 12063, *Execution of special geotechnical work — Sheet pile walls, combined pile walls, high modulus walls*

EN 12699, *Execution of special geotechnical work — Displacement piles*

EN 14199, *Execution of special geotechnical work — Micropiles*

Documents
Document Sharing Hub
Full document details: 23/30479676 DC

3 Terms, definitions, symbols

3.1 Terms and definitions

For the purposes of this document, the following terms and definitions apply.

NOTE Figures 3.1 to Figure 3.7 are only examples and are provided to enhance the understanding of the wording of the terminology used. The examples are by no means exhaustive and they do not represent any preferred detailing.

3.1.1 Terms and definitions for piles

3.1.1.1
bearing pile
pile that transmits forces to the ground either by compression through end bearing or by friction between the surface of the pile and the adjacent ground or a combination of both

Note 1 to entry: See examples in Figure 3.1a.

3.1.1.2
box pile
non-circular hollow pile fabricated from any combination of sheet pile and plate continuously or intermittently welded together in longitudinal direction (see Figures 3.1a and 3.1c)

3.1.1.3
bracing
system of walings and struts to support the structure (see Figure 3.2)

3.1.1.4
cantilever wall
wall whose stability depends solely upon embedment of the piles (sheet piles, combi-wall or high-modulus wall) made of steel into the ground (see Figure 3.2a)

3.1.1.5
cellular structure
retaining structure whose stability depends upon the self weight of the fill

Note 1 to entry: These structures are typically constructed from straight web profiles with sufficient interlock tensile strength to resist the circumferential tension developed in the walls due to the radial pressure of the contained fill (see Figure 3.4).

3.1.1.6
circular cell wall
wall constructed of individual cellular structures connected by arcs of smaller diameter (see Figure 3.3e)

3.1.1.7
combined wall
embedded retaining wall composed of connecting primary and secondary elements

Note 1 to entry: The primary elements are normally steel tubular piles, H-piles or box types, spaced uniformly along the length of the wall. The secondary elements are generally steel sheet piles of various types installed in the spaces between the primary elements and connected to them (see Figure 3.3c).

Documents
Document Sharing Hub
Full document details: 23/30479676 DC

3.1.1.8
connector
hot rolled or fabricated device that connects adjacent piles by means of a thumb and finger or similar configuration to make a continuous wall

Note 1 to entry: Connectors perform the same function as interlocks but are fabricated separately and not as an integral part of the pile.

3.1.1.9
diaphragm cell wall
wall constructed of special cellular structures using two rows of circular arcs connected together by diaphragms perpendicular to the axis of the structure (see Figure 3.3f)

3.1.1.10
double U-pile
two threaded single U-piles with shear connections

3.1.1.11
driveability
ability of a sheet pile or bearing pile to be driven through the ground strata to the required penetration depth without detrimental effects

3.1.1.12
driving
method, or combination of methods, for installing a pile into the ground to the required depth

EXAMPLE
1 impact
2 vibrating
3 pressing
4 resonance
5 screwing

3.1.1.13
foundation
construction for transmitting forces to the supporting ground

3.1.1.14
ground structure interaction
mutual influence of deformations on ground and a foundation or a retaining structure

3.1.1.15
high modulus wall
retaining wall formed by connecting primary steel elements that have the same geometry, see Figure 3.3b

Documents
Document Sharing Hub
Full document details: 23/30479676 DC

3.1.1.16
interlock
portion of a steel sheet pile that connects adjacent elements by means of a thumb and finger or similar configuration to make a continuous wall

Note 1 to entry: Interlocks can be described as

— free: threaded interlocks that are neither crimped nor welded;

— crimped: Interlocks of threaded single piles that have been mechanically connected by crimped points to form a shear connection;

— welded: interlocks of threaded single piles that have been mechanically connected by continuous or intermittent partial penetration butt welds to form a shear connection.

3.1.1.17
jagged wall
special sheet pile wall configuration in which the single piles are arranged either to enhance the moment of inertia of the wall or to suit special applications (see Figure 3.3d)

3.1.1.18
junction pile
special element (see Figure 3.5) connecting primary and secondary cells or adjacent diaphragm cells (see Figures 3.3e and 3.3f)

3.1.1.19
micropile
drilled pile which has a diameter smaller than 300 mm

Note 1 to entry: If not otherwise specified all provisions relating to piles also apply to micropiles.

3.1.1.20
pile
slender structural member, substantially underground, intended to transmit forces from above ground and/or forces caused by retaining of soil, into load-bearing strata below the surface of the ground

3.1.1.21
pile coupler
mechanical sleeve used to lengthen a steel tubular pile

3.1.1.22
piled foundation
foundation that incorporates one or more piles

3.1.1.23
propped wall
retaining wall whose stability depends upon embedment of piles into the ground and upon one or more levels of support (see Figure 3.2b)

Note 1 to entry: Support systems can include bracing, struts, props or floors.

3.1.1.24
retaining structure
construction element including walls retaining ground, similar material and/or water, and, where relevant, their support systems (e.g. anchors)

AVA Documents
Document Sharing Hub

Full document details: 23/30479676 DC

3.1.1.25
shear connection
any mode of connection preventing the relative displacement of piles at the interlocks when loaded

Note 1 to entry: Shear connections are typically fabricated by crimping or partial penetration butt welding the interlocks together. Shop crimping can be double or triple points. Shop or site welding can be continuous or intermittent.

3.1.1.26
sheet pile
product obtained by hot rolling or cold forming steel (e.g. drawing, bending, roll forming) to a shape such that, by interlocking of the joints or fitting of longitudinal grooves or by means of special fasteners, it forms partitions or continuous walls

Note 1 to entry: The types of steel sheet piles covered in this Part 5 are shown in Figure 3.1b.

3.1.1.27
sheet pile wall
line of sheet piles that forms a continuous wall by threading of the interlocks

Note 1 to entry: For typical examples see Figure 3.3.

3.1.1.28
soldier wall
Berlin wall
wall composed of vertical piles installed at intervals supporting intermediate horizontal elements (boarding, planks or lagging), see Figure 3.3g

3.1.1.29
straight web sheet pile
flat or slightly bent section with interlocks working in tension only, see Figure 3.1b

3.1.1.30
triple U-pile
sheet pile consisting of three threaded single U-piles with shear connections

3.1.1.31
tubular pile
pile of circular cross-section manufactured in a factory under controlled processes using seamless, longitudinal or helical welding processes (see Figures 3.1a and 3.1c)

3.1.2 Terms and definitions relating to anchors, tension piles and waling

3.1.2.1
anchor
structural element capable of transmitting an applied tensile load from the anchor head through a free anchor length to a resisting element and finally into the ground (see Figure 3.2c)

3.1.2.2
anchor head
element of an anchor which transmits tensile load to the structure

Note 1 to entry: For examples of typical anchor heads see Figure 3.6.

Documents
Document Sharing Hub
Full document details: 23/30479676 DC

3.1.2.3
anchored wall
retaining wall whose stability depends upon embedment of the piles into the ground and also upon one or more levels of tensile restraint

Note 1 to entry: Restraint can be provided by tension elements including anchors and tension piles see Figure 3.2c.

3.1.2.4
deadman
discrete passive structural element buried in or secured to the ground for the purpose of providing anchorage for tie rods through passive earth pressure

Note 1 to entry: Deadman anchorage can also be continuous, e.g. anchor sheet pile wall, ground beams, etc.

3.1.2.5
grouted anchor
anchor that uses a bonded length formed of cement grout, resin or similar material to transmit the tensile force to the ground

3.1.2.6
permanent anchor
anchor with a design service life which is in excess of two years

3.1.2.7
prestressed anchor
anchor which is stressed and locked off after installation, but before load enters the anchor (e.g. due to excavation, ground water lowering or service loads)

Note 1 to entry: Not all anchors are pre-stressed. Anchors are pre-stressed to limit deformation of the anchored structure. Prestressed anchors are also termed active anchors, whereas non-prestressed anchors are also termed passive anchors.

3.1.2.8
temporary anchor
anchor with a design service life of two years or less

3.1.2.9
tendon
part of an anchor that is capable of transmitting tensile load from the anchor head to the resisting element in the ground

EXAMPLE 1 solid steel rod or reinforcing steel bar

2 hollow bar

3 strand

3.1.2.10
tension pile
pile that transmits tension load to the ground by friction between the surface of the pile and the adjacent ground (see Figure 3.2c)

Documents
Document Sharing Hub
Full document details: 23/30479676 DC

3.1.2.11
tie rod
tie bar
circular solid steel rod (bar) with terminations transmitting tensile load from the anchor head to a deadman or anchor wall

Note 1 to entry: Tie rods are considered part of an anchor in this document.

3.1.2.12
waling
horizontal beam, usually of steel or reinforced concrete, fixed to the retaining wall and used to transmit the design support force for the wall into the anchors, tension piles or struts (see Figures 3.2 and 3.6)

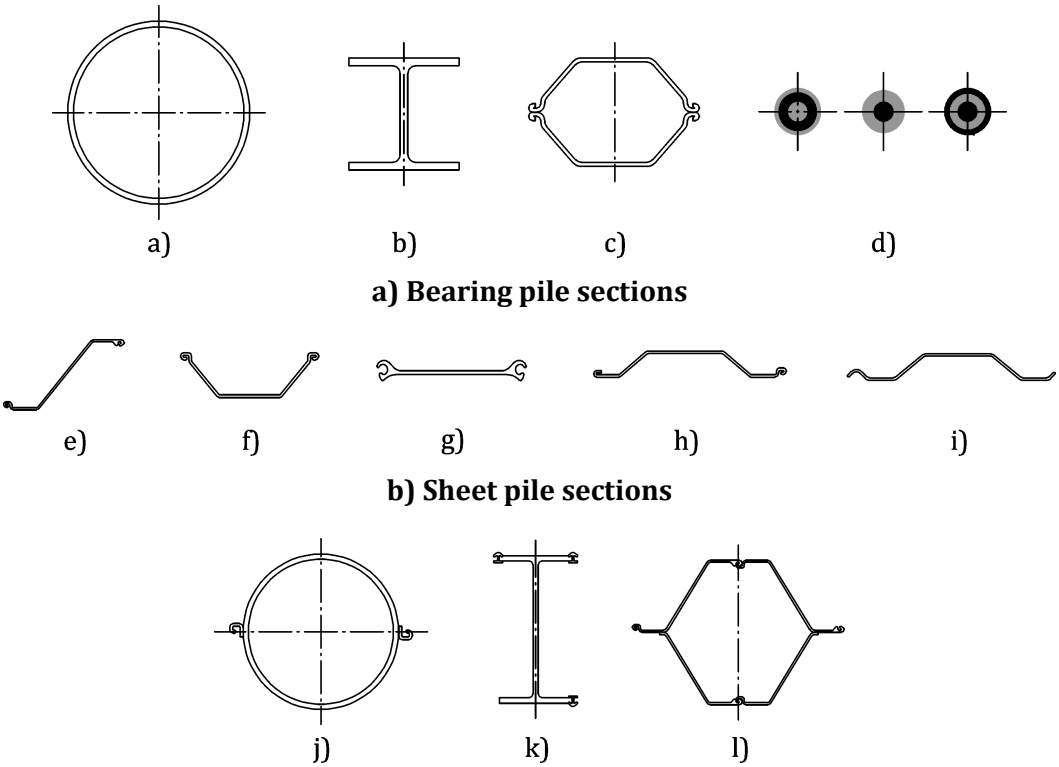

Key

a	tubular pile	e	Z-pile	i	trench pile
b	H-pile	f	U-pile	j	tubular pile
c	box pile	g	Straight web pile	k	H-pile
d	micropiles	h	Ω-pile (Omega pile)	l	box pile

NOTE Ω-piles and trench piles are dealt with in Annex A.

Figure 3.1 — Examples of typical pile sections

Documents
Document Sharing Hub
Full document details: 23/30479676 DC

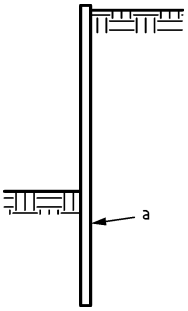

a) Cantilever retaining wall

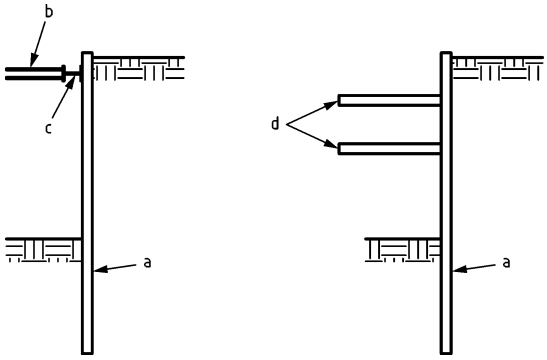

b) Propped retaining wall

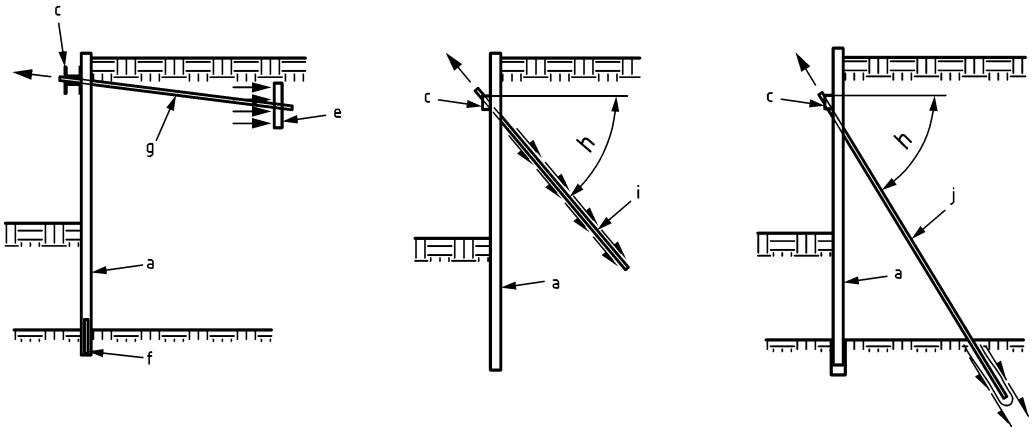

c) Anchored retaining wall

Key

a	sheet pile wall	f	rock dowel (where required)
b	strut / prop	g	tie rod anchor
c	waling	h	variable angle
d	floor	i	tension pile
e	deadman (anchor or wall)	j	grouted anchor

Figure 3.2 — Examples of retaining walls

Documents
Document Sharing Hub
Full document details: 23/30479676 DC

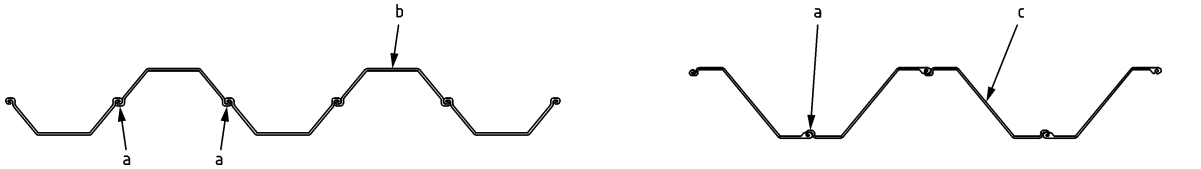

a) Sheet pile wall

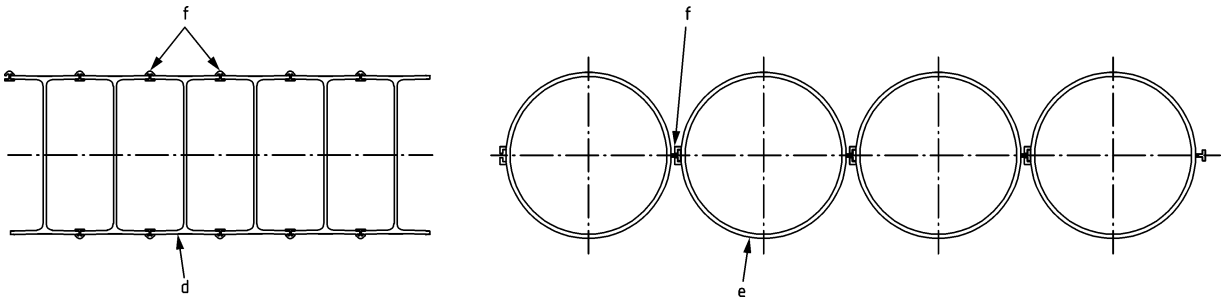

b) High modulus wall

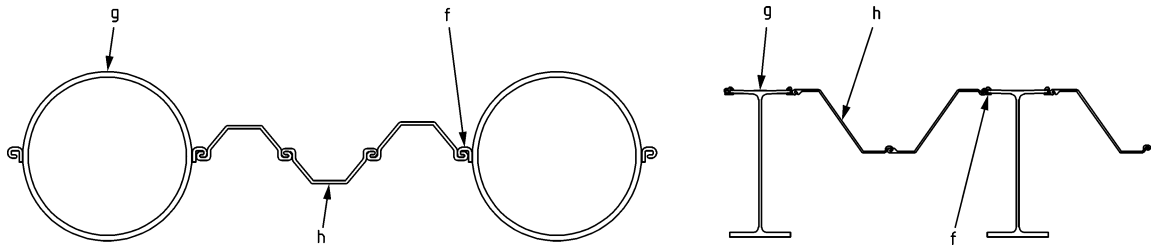

c) Combined wall

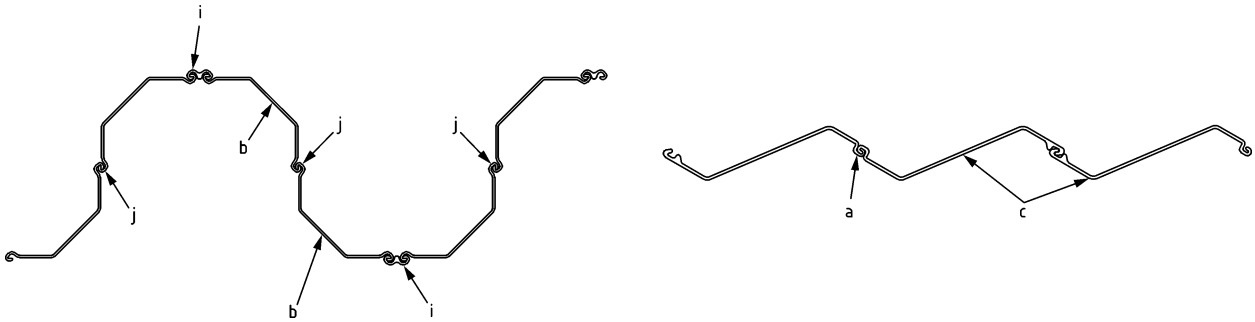

d) Jagged wall

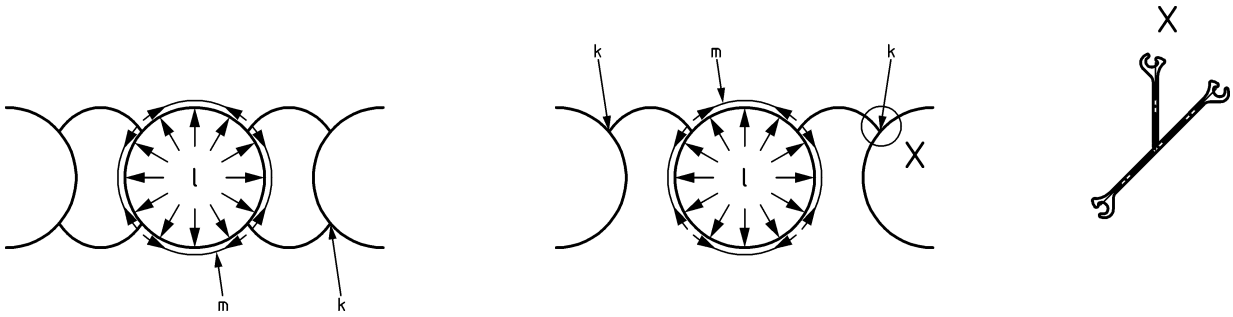

e) Circular cellular wall

Documents
Document Sharing Hub
Full document details: 23/30479676 DC

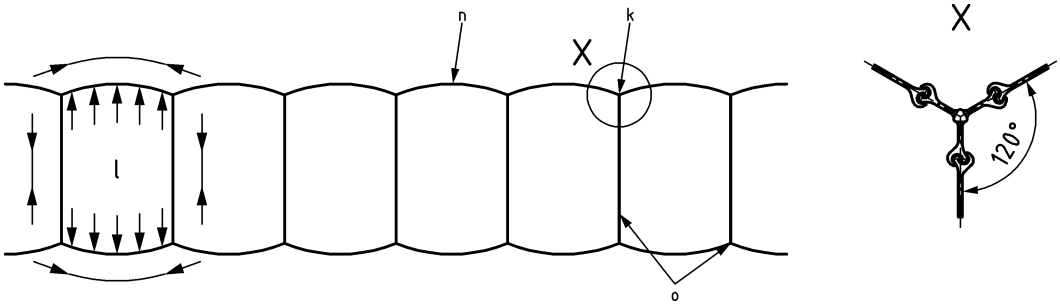

f) Diaphragm cell wall

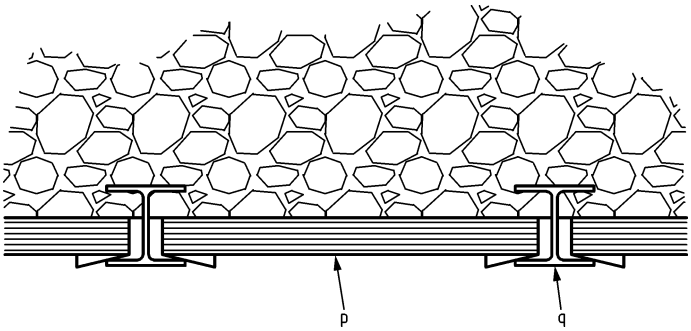

g) Soldier pile wall

Key

a	interlock	g	primary elements	m	circumferential tensile force
b	U-pile	h	Secondary elements	n	arc
c	Z-pile	i	welded connector	o	diaphragm wall
d	H-pile	j	crimped interlock	p	lagging, boarding, planks, steel plates
e	tubular pile	k	junction pile	q	soldier-pile
f	connector	l	internal pressure		

Figure 3.3 — Examples of pile configurations for retaining walls

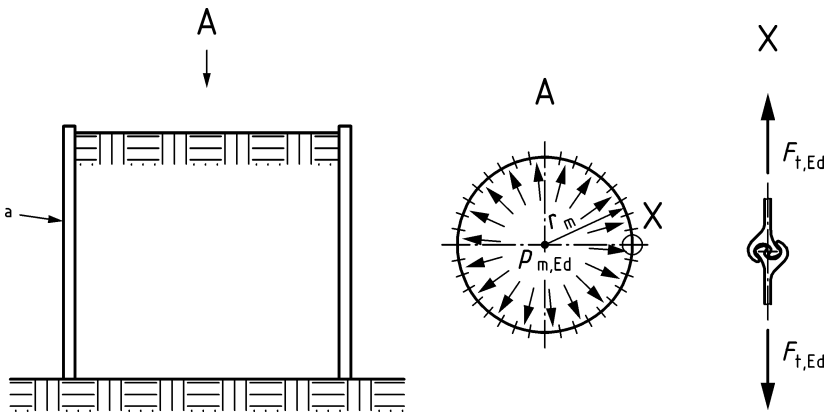

Key

a straight web piles

Figure 3.4 — Cellular structure

Documents
Document Sharing Hub
Full document details: 23/30479676 DC

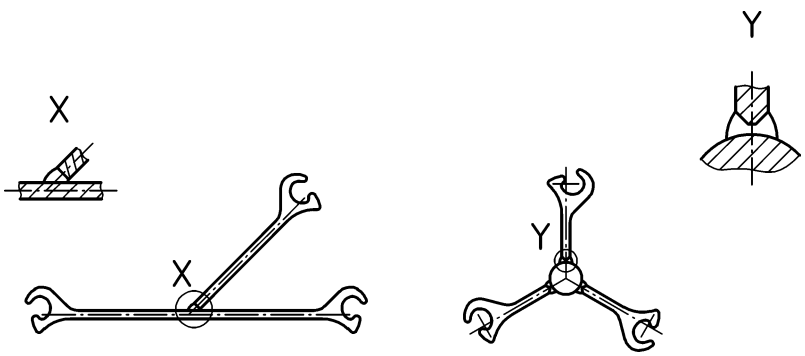

Figure 3.5 — Example junction piles

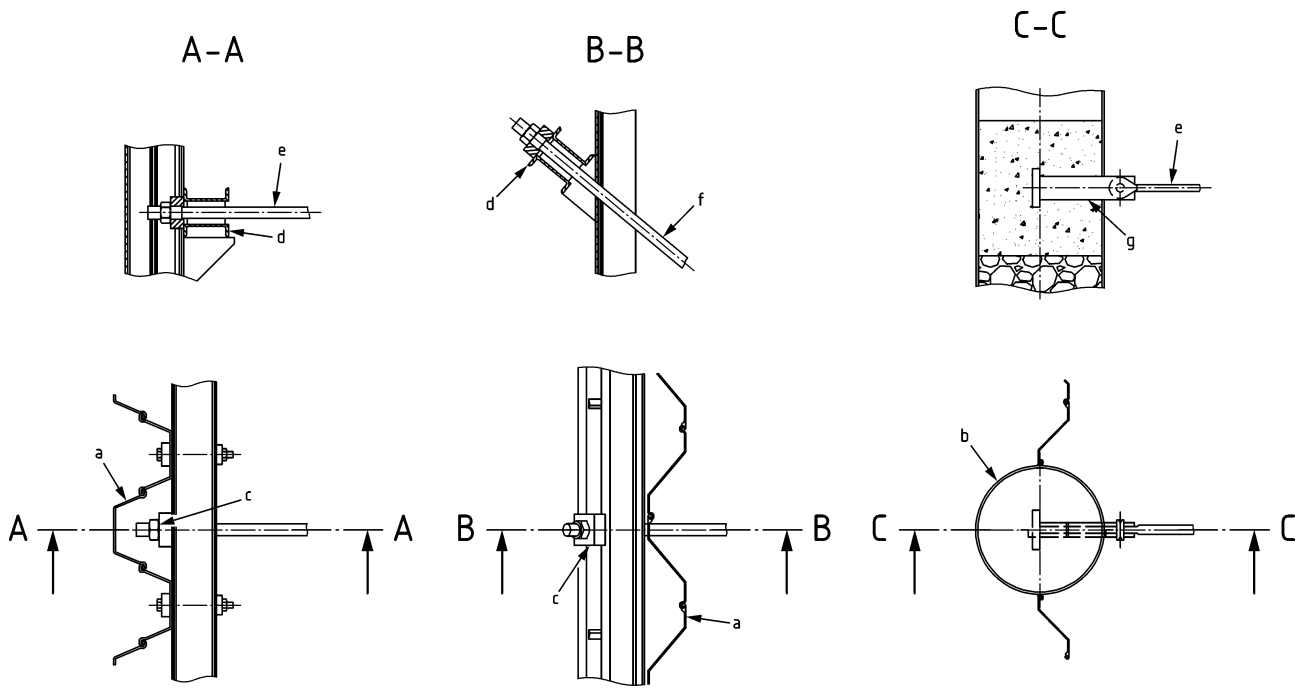

Key

a	sheet pile	e	tie rod
b	tubular pile	f	grouted anchor or tension pile
c	bearing plate	g	tie rod connector
d	waling		

Figure 3.6 — Examples of anchor head connections

3.2 Symbols

3.2.1 General

(1) For the purposes of this document, the following symbols apply.

Documents
Document Sharing Hub
Full document details: 23/30479676 DC

3.2.2 Latin upper-case symbols

A	cross-sectional area
A_g	gross cross-sectional area of the tension element
A_n	nominal metallic cross-sectional area of reinforcing steel
A_s	tensile stress area of the tension element at the termination
A_v	projected shear area, see Figure 8.1
B	(effective) width of the pile, in contact with soil
$B_{p,Rd}$	design punching shear resistance of the anchor head and the nut
$B_{t,Rd}$	design tensile resistance of washer plate assembly
C	member curvature
C_{cr}	critical curvature
C_y	Curvature at the point of first yield
C_Θ	non-dimensional rotational flexibility
D	diameter or width of pile
E	modulus of elasticity
F_{cr}	elastic critical buckling load for global instability mode based on initial elastic stiffness (see EN 1993-1-1)
F_d	design force
$F_{Q,Ed}$	additional horizontal force resulting from global buckling to be resisted by the toe of a sheet pile to allow for the assumption of a non-sway buckling mode
$F_{t,Ed}$	design value of the circumferential tensile force in a cellular cofferdam
F_{SLS}	axial force under characteristic loading
$F_{ta,Ed}$	design tensile force in the arc cell of a cellular cofferdam
$F_{tc,Ed}$	design tensile force in the common wall of a cellular cofferdam
$F_{tm,Ed}$	design tensile force in the main cell of a cellular cofferdam
$F_{ts,Rd}$	design tensile resistance of simple straight web steel sheet piles
G	shear modulus
H_A	fictitious horizontal load applied at the level of the anchor or support structure
I	second moment of area
$I_{T,eff}$	torsional moment of inertia of partially welded double H-section
$I_{T,D}$	torsional moment of inertia of a continuously welded double H-section
$I_{T,S}$	torsional moment of inertia of a single H-section
J	current density
$K_V(T)$	impact energy
K	lateral rigidity of the anchor or support structure
K_1	parameter depending on category of cross-sections

Documents
Document Sharing Hub
Full document details: 23/30479676 DC

L	length of the pile
L_a	length of intermittent weld
L_B	fraction of the distance between the toe and the horizontal support
L_c	weak axis free length of a partially embedded H-pile above a weaker soil layer
L_f	free length of a partially embedded pile
$L_{f,z}$	weak axis free length of a partially embedded H-pile, i.e. pile support to top of coarse soil layer
L_{cr}	buckling length
$L_{cr,LT}$	lateral torsional buckling length
L_s	height of the system
L_{Mmax}	length from the point of introduction of the external vertical load to the level of maximum design bending moment
$M_{c,Rd}$	design moment resistance of the cross-section
$M_{c,Rk}$	characteristic moment resistance of the cross-section
M_{Ed}	design value of bending moment
$M_{N,Rd}$	reduced design moment resistance allowing for the axial force
$M_{pl,Rd}$	design value of design plastic bending moment resistance
M_{Rk}	characteristic value of the bending moment resistance
$M_{V,Rd}$	reduced design plastic moment resistance allowing for the shear force
$M_{Ed}^{N=0}$	design bending moment assuming zero external vertical load and no sway imperfection
N_{cr}	elastic critical load for the relevant buckling mode of the sheet pile wall
$N_{cr,sw}$	elastic critical buckling load for sway mode
N_{Ed}	design value of the compression force
$N_{pl,Rd}$	design value of plastic compression resistance
N_{Rk}	characteristic value of the compressive resistance
P_p	proof load
Q	manufacturing tolerance class parameter
$R_{c,Rd}$	design resistance of a sheet pile to a local transverse force
$R_{e,Rd}$	elastic design resistance to the local transverse force
$R_{GEO,d}$	design ultimate geotechnical resistance of an anchor or tension pile
R_k	characteristic resistance of the crimped point determined by testing
$R_{k,s}$	characteristic interlock resistance of straight web piles
$R_{p,Rd}$	plastic design resistance to the local transverse force
$R_{STR,d}$	design ultimate structural tensile resistance of an anchor or tension pile
$R_{tg,d}$	design tensile resistance of the gross cross-section of the tension element shaft
$R_{tt,d}$	design tensile resistance at the termination, or coupling, of the tension element

Documents
Document Sharing Hub
Full document details: 23/30479676 DC

$R_{tt,Md}$ design tensile resistance at the termination, or coupling, of the tension element allowing for any bending effects

$R_{tw,Rd}$ design tensile resistance of the webs of a sheet pile to the introduction of a local transverse force

$R_{ULS,d}$ design value of the geotechnical ultimate limit state resistance of an anchor or tension pile

$R_{Vf,Rd}$ design shear resistance of the flange of a sheet pile to the introduction of a local transverse force

$R_{w,Rd}$ design value of the in-plane resistance of the web

$R_{w,Rk}$ characteristic in-plane resistance of the web

S_n nominal metallic cross-sectional area of prestressing steel

T design service life

T_{27J} test temperature

$V_{b,Rd}$ design value of the shear buckling resistance

V_{Ed} design value of shear force

$V_{pl,Rd}$ design value of plastic shear resistance

W_{ep} elasto-plastic section modulus for semi-compact sections

W_{el} elastic section modulus determined about the wall axis, with full shear transfer

W_{pl} plastic section modulus determined about the wall axis, with full shear transfer

X_n nominal value of a basic variable

3.2.3 Latin lower-case symbols

a ovalisation of tube

b_f width of the flat portion of the flange

b width of flange for a Z pile

b_a width of washer plate

c width or depth of a part of a cross-section
For U, Z and Ω piles it is the slant height of the web of steel sheet piles

c_1 rotational stiffness of connecting beam (at node 1)

d outer diameter of a tube

e eccentricity of the force introduced into the web

$f_{0.2k}$ characteristic proof strength at 0,2 % strain for reinforcing steel

$f_{b,v}$ shear buckling strength

$f_{p0.1k}$ characteristic proof strength at 0,1 % strain for prestressing steel

f_{pk} characteristic tensile strength for prestressing steel

f_{tk} characteristic tensile strength for reinforcing steel

f_u ultimate tensile strength

f_y nominal values of the yield strength

Documents
Document Sharing Hub
Full document details: 23/30479676 DC

$f_{y,red}$	reduced yield strength
f_{yb}	nominal yield strength of the basic steel used for cold forming
h	depth of a cross-section
h_a	length of washer plate
h_w	height of the web between flange midlines
k	lateral linear subgrade reaction of the soil to the bearing pile [N/m³]
k_{gr}	lateral linear subgrade reaction of coarse granular soil to a bearing pile [N/m³]
k_{fi}	lateral linear subgrade reaction of fine cohesive soil to a bearing pile [N/m³]
k_1	translational stiffness (at node 1)
kB_0	reference value of the lateral subgrade reaction multiplied with the pile width [N/m³]
k_t	reduction factor for anchor tension elements in tension
k_b	reduction factor for anchor tension elements in bending
k_{yy}	interaction factor for flexural member buckling
l	length
L_y	effective bearing length
n	ratio between load and critical buckling force
$m_{x,Ed}$	transversal bending moment in interlock [Nm/m]
$p_{m,Ed}$	design value of the internal pressure acting in the main cell of a cellular cofferdam
$q_{y,Ed}$	horizontal force in interlock [N/m], in y-direction
r	midline radius of the corners between the webs and the flanges
r_t	mid-line radius of the tube
r'	radius of the circular tube in ovalized state
r_0	outside radius of the corner between flange and web
r_a	initial radius of the arc cell in a cellular cofferdam
r_m	initial radius of the main cell in a cellular cofferdam
s_s	length of stiff bearing
t_f	nominal flange thickness of a steel sheet pile
t_{min}	lesser of t_f or t_w for a Z pile
t_{red}	reduced plate thickness
t_w	nominal web thickness of a steel sheet pile
$t_{w,i}$	varying web thicknesses
v	Poisson's ratio

3.2.4 Greek symbols

α	angle of inclination of the web
α_e	buckling parameter in the elastic range
α_T	coefficient of linear thermal elongation

Documents
Document Sharing Hub
Full document details: 23/30479676 DC

α_1	stiffness factor of the lateral resistance of the embedded part of the pile, defined at surface level
β	ratio between the lateral linear subgrade reaction of the soil and flexural rigidity of the pile
β_0	critical length coefficient for weak axis buckling, i.e. ratio between the critical length and the free length of a partially embedded pile
β_1	critical length coefficient for weak axis buckling, for a partially embedded pile in uniform dense soil
β_2	critical length coefficient for weak axis buckling, for a partially embedded pile in uniform soft soil
β_3	critical length coefficient for weak axis buckling, for a fully embedded pile in uniform soft soil
β_p	buckling parameter in the plastic range
β_a	reduction factor accounting for effect of the decrease of the diameter
β_D	factor accounting for the possible reduction of the bending stiffness of U-piles due to insufficient shear force transmission in the interlocks
β_m	reduction factor accounting for transverse shell bending
β_T	factor accounting for the behaviour of a welded junction pile at ultimate limit states
β_B	factor accounting for the possible reduction of the section modulus of U-piles due to insufficient shear force transmission in the interlocks
$\beta_{soil\ fill}$	reduction factor of transverse shell bending to account for soil fill
β_{ov}	over-design factor of anchors, struts, walings and connections in the transient and persistent design situations
β_w	degree of welding in zone of intermittent welding
$\delta_{high-low}$	offset of the weld shell parts of equal thickness
δ_{un}	undulation of tube wall
δ_y	imposed in-plane displacement on secondary piles caused by misalignment of primary piles
δ_z	maximum relative deflection of a sheet pile wall occurring between the supports according to a first order analysis
δ_A	horizontal displacement at the level of the anchor or support structure due to H_A, relative to the bottom end of the member
Δh	differential water head [m]
Δl	additional pile length
ΔM_{imp}	additional bending moment due to sway imperfection
$\Delta t_{d,mw}$	total loss of thickness due to corrosion caused by mechanical wearing during the design service life
ε	material parameter
ε_{mp}	maximum plastic strain

Documents
Document Sharing Hub
Full document details: 23/30479676 DC

γ_{FE}	model factor covering the uncertainties of the numerical model and the executed analysis type
γ_{Mi}	partial factor (generic symbol)
γ_{M0}	partial factor for resistance of cross-sections
γ_{M1}	partial factor for resistance of members to instability assessed by member checks
γ_{M2}	partial factor for resistance of cross-sections in tension to fracture
$\gamma_{M3,ser}$	partial factor for resistance of connection cross-sections in tension at serviceability limit state
$\gamma_{Mt,A}$	partial factor for resistance of reinforcing or prestressing steel in tension to fracture
γ_s	partial factor for resistance of cross-sections in reinforcing or prestressing steel
γ_t	partial factor for resistance of reinforcing or prestressing steel in tension to fracture
η_{sys}	factor for differences in behaviour under test and service conditions
λ	non-dimensional slenderness factor
$\bar{\lambda}$	web slenderness, shell slenderness
ρ	unit mass
ρ_C	reduction factor
ρ_P	factor accounting for the effects of differential water pressure on transverse local plate bending
ϕ_{Cd}	design plastic rotation angle provided by the cross-section
ϕ_{Ed}	maximum design rotation angle demand for the actual design case
φ_k	design value of the internal friction angle of the fill material
$\phi_{y,Ed}$	rotation angle corresponding to the reduced plastic moment resistance $M_{pl,Rd}$
$\phi_{rot,Ed}$	design angle at ultimate limit state
ρ	reduction factor to determine reduced design values of the resistance to bending moments making allowance for the presence of shear forces
χ	buckling coefficient

3.3 Convention for sheet pile axes

(1) For sheet piling the following Cartesian axis convention is used:

— generally

  — x – x is the longitudinal axis of a pile;

  — y – y is the principal cross-sectional axis parallel to the retaining wall;

  — z – z is the other cross-sectional axis;

— where necessary

  — u – u is the principal axis nearest to the plane of the retaining wall if this does not coincide with the y-y-axis;

Documents
Document Sharing Hub
Full document details: 23/30479676 DC

— v – v is the other principal axis if this does not coincide with z-z.

See Figure 3.7.

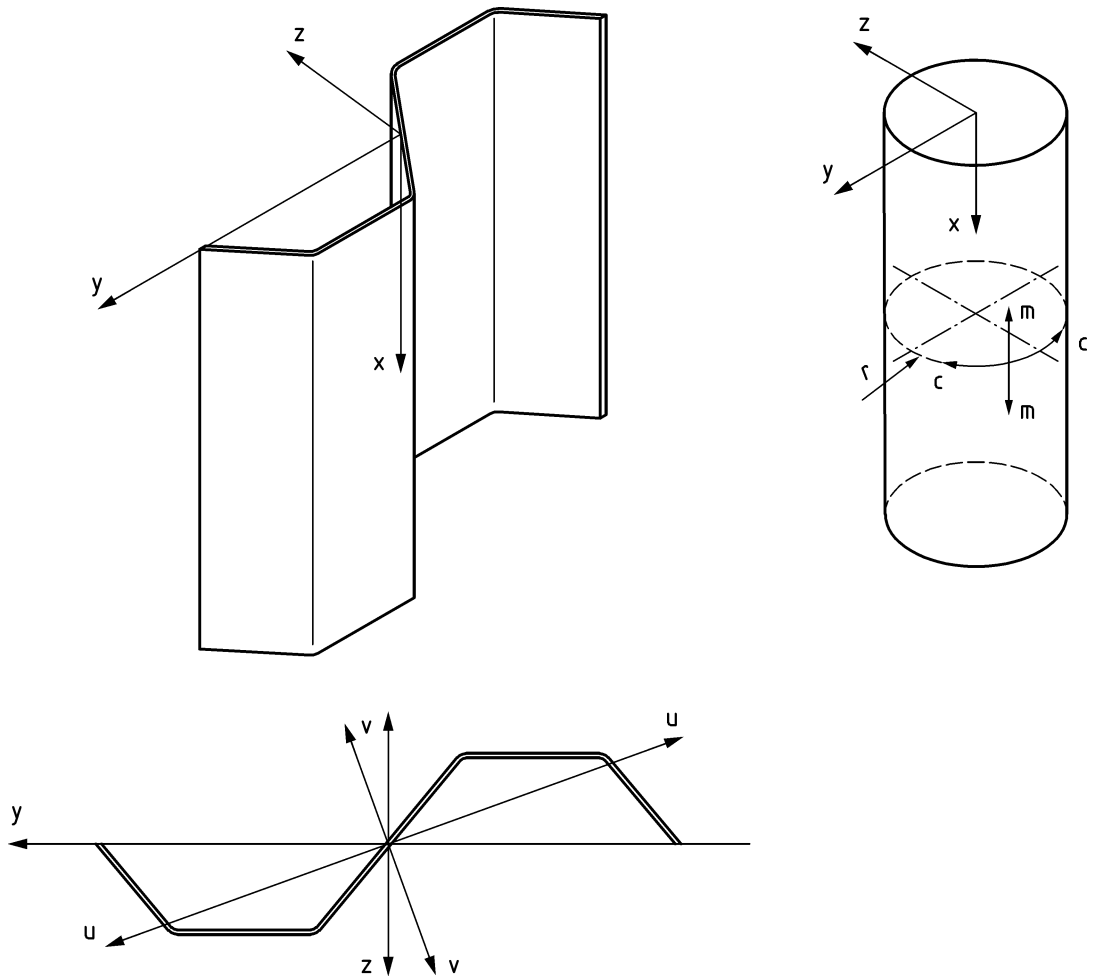

Key

m meridional axis

c circumferential axis

r radial axis

Figure 3.7 — Convention for sheet pile axes

4 Basis of design

4.1.1 Basic requirements

(1) The design of piling structures shall be in accordance with the general rules given in EN 1990 and EN 1991 (all parts) and the specific design provisions for steel structures given in EN 1993-1 (all parts).

(2) Geotechnical actions and resistances shall be in accordance with EN 1997 (all parts).

(3) Piling structures designed according to this document shall be executed according to

— EN 12063 for sheet piling, combined pile walls, high modulus walls

— EN 12699 for displacement piles

Documents
Document Sharing Hub
Full document details: 23/30479676 DC

— EN 14199 for micropiles

— EN 1090-2 for walings, bracings, struts, connecting parts and structural steel parts of anchors and tension piles

— EN 1537 for grouted anchors

— EN 1536 for concreting of bearing piles

with construction materials and products used as specified in the relevant parts of EN 1993, or in the relevant material and product specifications.

NOTE The scope of EN 1090-2 does not include steel sheet piles.

4.1.2 Structural reliability and consequences of failure

(1) To obtain the reliability of the completed works required according to EN 1990, an appropriate execution class shall be selected in accordance with EN 1993-1-1:2022, Annex A for steel piles executed to EN 12063, EN 12699 and EN 14199 and for associated steel structures (waling, bracing, connections, etc.) executed to EN 1090-2.

(2) The execution class of steel pile foundations under seismic loading should be chosen equal to the one of the building they support. The execution class of other steel piles and associated steel structures under seismic loading that have no ductility class according to EN 1998 (all parts) should follow the same execution class as if DC1.

NOTE See prEN 1998-1-1:2022, 4.4.2 for definition of ductility classes DC1, DC2 and DC3.

(3) If different levels of reliability are required, they should be achieved by an appropriate choice of quality management measures in design and execution according to EN 1990, and relevant execution codes mentioned in 4.1.1 (3).

(4) Consequence classes should be determined according to EN 1990 and prEN 1997 (all parts).

4.1.3 Robustness

(1) To achieve the required level of robustness according to EN 1990 and prEN 1997-3, retaining walls, walings, anchors, struts and connections should at least comply with clause (2), (3) and (4). Additional measures and strategies of design should be taken in accordance with prEN 1997-1 where needed.

(2) Retaining walls, walings, anchors, struts and connections should be designed against progressive collapse to achieve the required level of robustness according to EN 1990 and prEN 1997-3 either by

— designing for a failing structural element, e.g. a failing anchor or strut in the accidental design situation (method 1) or by

— over-designing of anchors, struts, walings and connections with a factor β_{ov} in the transient and persistent design situations (method 2).

NOTE 1 The choice of method can be given in the National Annex. The value of β_{ov} = 1,25 for anchors and connections, unless the National Annex specifies a different value.

NOTE 2 Robustness can be achieved in different ways. Prevention of accidental situations is an important consideration.

NOTE 3 Designing the walings as continuous in tension and/or bending can enhance the resistance in case of a failing anchor or strut.

Documents
Document Sharing Hub
Full document details: 23/30479676 DC

(3) In cases with risk of (ship or vehicle) impacts detailing for anchor heads should provide adequate protection. Protrusion of anchor heads should be avoided.

(4) The design of the pile structure shall be checked and modified (if necessary) to account for any significant variations encountered during installation.

4.1.4 Design service life

(1) The required design service life of a piling structure should be specified according to EN 1990. According to the specific needs the required design service life may be specified by the relevant authority or, where not specified, as agreed for a specific project by the relevant parties.

NOTE Guidance on the design service life of specific geotechnical structures is given in prEN 1997-3.

4.1.5 Durability

(1) Depending upon the type of action affecting the design service life (see EN 1990), piling structures shall be:

— designed for the effects of corrosion (see Clause 6)

— designed for driveability (see 4.5)

— designed for accidental actions (see prEN 1991-1-7)

— designed for the effects of fatigue where relevant (see prEN 1993-1-9)

— inspected and maintained.

(2) The durability requirements stated in this document shall be followed, see Clause 6.

4.1.6 Sustainability

(1) Piling structures should be designed for sustainability according to EN 1990.

4.2 Principles of limit state design

4.2.1 Design situations

(1) All design situations, including each stage of execution and use, shall be taken into account.

NOTE For the selection of design situations, see EN 1990.

4.2.2 Ultimate limit state criteria

(1) The following ultimate limit state criteria shall be taken into account:

— failure of the system or component of the system, by exceedance of the resistance of the ground, or by other geotechnical failure mechanisms, see prEN 1997-3;

— structural failure of any component of the system and/or connections of the components;

— combination of failure in the ground and structural failure.

(2) Verifications related to ultimate limit state criteria should be carried out in accordance with prEN 1997-1 and prEN 1997-3.

Documents
Document Sharing Hub

Full document details: 23/30479676 DC

(3) Depending on the design situation the resistance to one or more of the following modes of structural failure should be verified:

— for bearing piles:

  — failure due to bending and/or axial force;

  — failure due to overall flexural buckling, taking account of the restraint provided by the ground and by the supported structure at the connections to it;

  — local failure at points of load application;

  — fatigue.

— for retaining walls, walings, bracings and struts:

  — failure due to bending and/or axial force;

  — failure due to overall flexural buckling, taking account of the restraint provided by the ground;

  — local buckling due to overall bending;

  — local failure at points of load application (e.g. web crippling);

  — fatigue.

— for anchors and tension piles:

  — structural failure caused by the applied force;

  — structural failure caused by loads arising from prestressing or proof loading during testing;

  — structural failure caused by deformation of surrounding ground during the life of the structure, such as settlements;

  — fatigue.

(4) For the verification of ultimate limit states, the effects of actions on the walings and bracing should be determined for all relevant design situations.

4.2.3 Serviceability limit state criteria

(1) Unless otherwise specified, the following serviceability limit state criteria should be taken into account:

— for bearing piles:

  — limits to vertical settlements or horizontal displacements necessary to suit the supported structure;

  — vibration limits necessary to suit structures directly connected to, or adjacent to, the bearing piles.

— for retaining walls, walings, bracings and struts:

  — deformation limits necessary to suit the serviceability of the retaining wall itself;

Documents
Document Sharing Hub
Full document details: 23/30479676 DC

— limits to horizontal displacements, vertical settlements or vibrations, necessary to suit structures directly connected to, or adjacent to, the retaining wall itself.

— for anchors and tension piles:

— deformation limits necessary to suit the serviceability of the retaining wall.

(2) Values for the limits given in (1), in relation to the combination of actions to be taken into account according to EN 1990, should be specified.

(3) Where relevant, values for limits imposed by adjacent structures should be specified.

NOTE 1 Guidance for determining such limits is given in prEN 1997-1, prEN 1997-3 and EN 1990.

NOTE 2 Serviceability criteria can be the governing criteria for the design.

4.3 Basic variables

4.3.1 Actions and environmental influences

(1) Parameters for ground and/or backfill shall be determined from geotechnical investigation in accordance with prEN 1997-2.

(2) Where relevant, actions should be taken from EN 1991, otherwise they should be specified by the relevant authority or, where not specified, as agreed for a specific project by the relevant parties.

(3) In the case of piled foundations, actions due to vertical or transverse ground movements (e.g. down-drag, passive loading due to horizontal movement, etc.) should be assessed in accordance with prEN 1997-1 and prEN 1997-3.

(4) The actions transmitted to the structure through the ground should be assessed by using models selected in accordance with prEN 1997-1 or should be taken as specified by the relevant authority or, where not specified, as agreed for a specific project by the relevant parties.

(5) Where necessary, the effects of actions resulting from variations in temperature with time, should be taken into account. The design may prescribe measures to reduce the influence of temperature variations.

NOTE Examples for which temperature effects are likely are struts and bracings.

(6) Where necessary, the effects of actions resulting from special loads not specified in EN 1991 (all parts), should be taken into account.

NOTE 1 Examples of special loads are:

— loads due to falling objects or swinging buckets;

— loads from excavators and cranes;

— imposed loads such as pumps, access ways, intermediate struts, staging for materials or stacking of bundles of steel reinforcement.

(7) Unless otherwise specified, for retaining walls subject to loads from a road or a railway track, simplified models for such loads (for example uniformly distributed loads) derived from those defined for bridges may be used, see prEN 1991-2 and prEN 1997-1:2022, Annex F.

(8) Where applicable, seismic actions should be considered in accordance with EN 1998 (all parts).

AVA Documents
Document Sharing Hub

Full document details: 23/30479676 DC

4.3.2 Material and product properties and geometrical data

(1) The material properties for steels and other construction products and the geometrical data to be used for design should be those specified in the relevant EN and EN ISO product standards, or according to a transparent and reproducible assessment that complies with all the requirements of a European Assessment Document (EAD) or European Technical Approval (ETA) specific to piling applications, unless otherwise indicated in Clause 5 of this document.

4.4 Verification by the partial factor method

4.4.1 Design values of actions

(1) For the design of piled foundations and sheet pile walls, combination of actions and partial factors of actions shall be derived from EN 1990: 2023, Annex A or EN 1997 where applicable.

4.4.2 Design values of material properties

(1) For the design of steel structures, nominal values Xn of material properties shall be used as indicated in Clause 5.

4.4.3 Design values of geometrical properties

(1) Except where the design is sensitive to the effects of variations, assessment of the effects of actions in piled foundations and in sheet pile walls may be carried out based on nominal values of geometrical properties.

4.4.4 Construction tolerances

(1) For sheet pile walls the construction tolerances for position and verticality of sheet piles should be as specified in EN 12063.

(2) In order for the piling to develop its nominal resistance and stiffness properties, the wall alignment should be in accordance with EN 12063.

(3) The construction tolerances of bearing piles and micropiles should be as specified in EN 12699 and EN 14199 respectively.

4.4.5 Imperfections

(1) Root gap imperfections shall be taken into account in the verification of welds according to prEN 1993-1-8 if quality level D welds are considered in accordance with EN 12063.

NOTE Welding imperfections are described in ISO 5817

4.5 Driveability

(1) In the design of all piles (bearing piles or sheet piles), the practical aspects of installing the piles to the required penetration depth shall be taken into account. Reference shall be made to EN 12063, EN 12699 and EN 14199.

(2) The type, size and detailing of the piles should be chosen, in combination with the effectiveness of the piling plant used for installation and extraction, and the driving procedure (driving parameters), to be suitable for the ground conditions through which the piles must be driven.

(3) If pile points, stiffeners or friction reducers are used as an aid to driving or to strengthen the piles during installation, their effects on the performance of the piles under service conditions should be taken into account.

Documents
Document Sharing Hub
Full document details: 23/30479676 DC

4.6 Design assisted by finite element analysis

4.6.1 General

(1) Finite element analysis for critical buckling, ultimate limit state, serviceability limit state or fatigue verification should be carried out according to the rules given in prEN 1993-1-14.

(2) The evaluation of the numerical simulation results should be made according to prEN 1993-1-14.

NOTE The recommended value of the maximum acceptable plastic strain is ε_{mp} = 5 %, unless otherwise specified by the National Annex.

(3) Plastic strains greater than the recommended value may be used for tension members if tests of a specific construction detail and steel grade have proven that they can be achieved.

NOTE Different limits of plastic strains can apply in longitudinal and in transverse direction due to rolling effects.

(4) The provisions of prEN 1993-1-14 for numerical simulations used to supplement testing apply.

(5) When needed, modelling of the ground or ground-structure interaction should be carried out in accordance with prEN 1997-1 and prEN 1997-3 in addition to prEN 1993-1-14.

4.6.2 Secondary elements

(1) The evaluation of the numerical simulation results for verification of secondary elements in accordance with 8.7.2 (2) should be made according to prEN 1993-1-14. 60 % of the elongation at failure according to EN 10248 may be used as maximum acceptable plastic strain for elements in tension.

(2) To avoid safety by-pass, an appropriate value of γ_{FE} should be used in combination with γ_{M2}.

NOTE 1 For finite element models using shell or solid elements, the recommended value of γ_{FE} is 1,2, unless the National Annex gives a different value.

NOTE 2 For finite element models using beam elements, the recommended value of γ_{FE} is the maximum of γ_{FE} determined according to prEN 1993-1-14:2023, Annex A and 1,2, unless the National Annex gives a different value.

4.7 Design assisted by testing

(1) The general provisions for design assisted by testing of structural elements given in EN 1990 should be satisfied unless more specific provisions are given in prEN 1993-5.

NOTE 1 Guidance on the determination of structural design resistance from tests is given in of EN 1990:2023, Annex D.

NOTE 2 The geotechnical design of bearing piles and tension piles can be performed by calculation based on geotechnical investigation and / or tests. Further guidance can be found in prEN 1997-3.

NOTE 3 The geotechnical design of an anchor depends on the type of anchor used, e.g. grouted anchors are based on *in situ* testing. Further guidance can be found in prEN 1997-3.

(2) Testing of class 4 sheet piles shall be in accordance with Annex B.

(3) Design assisted by testing may be used in following cases

— Classification of piles, see 7.4

— Verification of effects of eccentric anchors, see 8.3.6

— Verification of secondary elements, see 8.7.2, connectors, see 8.7.3 and overall resistance of primary elements, see 8.7.4.1

AVA Documents
Document Sharing Hub

Full document details: 23/30479676 DC

— Verification of junction piles, see 8.10.2

— Verification of terminations and connections, see 8.11.1

— Verification of joints between pile elements, see 8.13

(4) Testing may be supplemented by numerical simulations in accordance with 4.6.

4.8 Verification by observational method

(1) The assumptions made in the design of piling, anchors, walings, struts and connections may be verified by the observational method according to prEN 1997-1 (for instance in the case of an excavation procedure).

(2) Calibration of a calculation model and modification of the design during execution shall be in accordance with prEN 1997-1.

4.9 Fatigue

(1) Where a structure or a part of it is sensitive to fatigue phenomena, the fatigue verification should be carried out in accordance with prEN 1993-1-9.

NOTE The fatigue resistance is significantly influenced by corrosion and a suitable corrosion protection can be applied.

(2) The effects of impact or vibration during installation of bearing piles or sheet piles may be neglected in fatigue analysis.

5 Materials

5.1 General

(1) This document shall be used for the design of piles and retaining walls fabricated from steel conforming with the standards referred to in 5.2 to 5.5.

(2) This document may also be used for other steels, provided that adequate data exist to justify application of the relevant design and fabrication rules. Test procedures and test evaluation should conform with EN 1990:2023, Annex D and the test requirements should align with those given in the relevant standards mentioned in 5.2 to 5.5.

(3) Re-used and repurposed steel used as steel piles shall as a minimum comply with the requirements concerning geometrical and material properties specified in the design and shall be free from damage and deleterious matters that would affect strength and durability.

(4) Stainless steels may be used in accordance with prEN 1993-1-4 and (2) above.

5.2 Material properties for steel piles

5.2.1 Strength of bearing piles

(1) Material properties of bearing piles fabricated from structural steel to EN 10025, EN 10210-1, EN 10210-2, EN 10219-1 and EN 10219-2 shall conform with EN 1993-1-1.

(2) For the properties of bearing piles fabricated from steel sheet piles see 5.2.2 to 5.2.4.

Documents
Document Sharing Hub
Full document details: 23/30479676 DC

5.2.2 Strength of hot rolled sheet piles

(1) Hot rolled steel sheet piles shall be in accordance with EN 10248 (all parts).

(2) Nominal values of the yield strength f_y and the ultimate tensile strength f_u for hot rolled steel sheet piles may be obtained from Table 5.1, which are the minimum values given in EN 10248-1.

NOTE The steel grades listed in Table 5.1 are accepted as satisfying these requirements.

Table 5.1 — Nominal values of yield strength f_y and ultimate tensile strength f_u for hot rolled steel sheet piles according to EN 10248-1

Steel name to EN 10027	f_y N/mm²	f_u N/mm²
S240 GP	240	340
S270 GP	270	410
S320 GP	320	440
S355 GP	355	480
S390 GP	390	490
S430 GP	430	510
S460 GP [a]	460	530

[a] S460 GP is not a grade included in EN 10248-1:1995 but is included in prEN 10248-1:2023.

5.2.3 Strength of cold formed sheet piles

(1) Cold formed steel sheet piles shall be in accordance with EN 10249 (all parts).

(2) Nominal values for the basic yield strength f_{yb} and the ultimate tensile strength f_u for cold formed steel sheet piles may be obtained from Table 5.2 which is in accordance with EN 10249-1.

NOTE The basic yield strength f_{yb} is the nominal yield strength of the basic steel used for cold forming.

Table 5.2 — Nominal values of basic yield strength f_{yb} and ultimate tensile strength f_u for cold formed steel sheet piles according to EN 10249-1

Steel name to EN 10027	f_{yb} N/mm²	f_u N/mm²
S235 JRC	235	340
S275 JRC	275	410
S355 JOC	355	490

5.2.4 Strength of steel members used for combined walls

(1) Steel properties of special H-section piles used as the primary elements of combined walls shall be in accordance with EN 10248-1. See Table 5.1 of this document.

(2) Tubes used as the primary elements in combined walls shall conform with EN 10210 (all parts) or EN 10219 (all parts).

(3) Steel properties of box piles used as the primary elements of combined walls shall satisfy the requirements given in 5.2.2.

AVA Documents
Document Sharing Hub

Full document details: 23/30479676 DC