Draft for Public Comment

Form 36

DPC: 23/30483756 DC

BSI Group Headquarters

389 Chiswick High Road London W4 4AL

Tel: +44 (0)20 8996 9000
Fax: +44 (0)20 8996 7400
www.bsigroup.com

Date: 14 November 2023
Origin: European

Latest date for receipt of comments: 09 January 2024

Project No. 2021/00277

Responsible committee: B/504/-/1 Water Supply - External systems and components

Interested committees:

Title: Draft BS EN 805 Water supply - Requirements for systems and components outside buildings.

Please notify the secretary if you are aware of any keywords that might assist in classifying or identifying the standard or if the content of this standard

i) has any issues related to 3rd party IPR, patent or copyright
ii) affects other national standard(s)
iii) requires additional national guidance or information

WARNING: THIS IS A DRAFT AND MUST NOT BE REGARDED OR USED AS A BRITISH STANDARD. THIS DRAFT IS NOT CURRENT BEYOND 09 January 2024

This draft is issued to allow comments from interested parties; all comments will be given consideration prior to publication. No acknowledgement will normally be sent. **See overleaf for information on the submission of comments.**

No copying is allowed, in any form, without prior written permission from BSI except as permitted under the Copyright, Designs and Patent Act 1988 or for circulation within a nominating organization for briefing purposes. Electronic circulation is limited to dissemination by e-mail within such an organization by committee members.

Further copies of this draft may be purchased from BSI Shop http://shop.bsigroup.com or from BSI Customer Services, Tel: +44(0) 20 8996 9001 or email cservices@bsigroup.com. British, International and foreign standards are also available from BSI Customer Services.

Information on the co-operating organizations represented on the committees referenced above may be obtained from https://standardsdevelopment.bsigroup.com/.

Responsible Committee Secretary: Ms Federica Vitali (BSI)
Direct tel: 0208 996 7944
E-mail: federica.vitali@bsigroup.com

Documents
Document Sharing Hub
Full document details: 23/30483756 DC

Introduction

This draft standard is based on national and international discussions. Your comments on this draft are invited and will assist in the preparation of the consequent standard.

For international standards, comments will be reviewed by the relevant UK national committee before sending the consensus UK vote and comments to the international committee, which will then decide appropriate action. If the international standard is approved, it is usual for the text to be published as a British Standard.

For national standards, comments will be reviewed by the relevant UK national committee and the resulting standards published as a British Standard.

UK Vote

Please indicate whether you consider the UK should submit a negative (with supporting technical reasons) or positive vote on this draft. Please indicate if you are aware of any reason why this draft standard should not be published as a British Standard.

Submission of Comments

- **Annotated drafts are not acceptable and will be rejected.**
- All comments should be submitted online at **https://standardsdevelopment.bsigroup.com/**. You will need to register in order to comment.

Template for comments and secretariat observations

Date: xx/xx/20xx	Document: ISO/DIS xxxx

1	2	(3)	4	5	(6)	7
MB	Clause No./ Subclause No./Annex **(e.g. 3.1)**	Paragraph/ Figure/Table/Note	**Type of comment**	**Commend (justification for change) by the MB**	**Proposed change by the MB**	**Secretariat observations on each comment submitted**
	3.1	Definition 1	ed	Definition is ambiguous and needs clarifying.	Amend to read '...so that the mains connector to which no connection...'	
	6.4	Paragraph 2	te	The use of the UV photometer as an alternative cannot be supported as serious problems have been encountered in its use in the UK.	Delete reference to UV photometer.	

Documents
Document Sharing Hub

Full document details: 23/30483756 DC

EUROPEAN STANDARD

NORME EUROPÉENNE

EUROPÄISCHE NORM

DRAFT
prEN 805

April 2022

ICS 93.025

Will supersede EN 805:2000

English Version

Water supply - Requirements for systems and components outside buildings

Alimentation en eau - Exigences pour les réseaux extérieurs aux bâtiments et leurs composants

Wasserversorgung - Anforderungen an Wasserversorgungssysteme und deren Bauteile außerhalb von Gebäuden

This draft European Standard is submitted to CEN members for enquiry. It has been drawn up by the Technical Committee CEN/TC 164.

If this draft becomes a European Standard, CEN members are bound to comply with the CEN/CENELEC Internal Regulations which stipulate the conditions for giving this European Standard the status of a national standard without any alteration.

This draft European Standard was established by CEN in three official versions (English, French, German). A version in any other language made by translation under the responsibility of a CEN member into its own language and notified to the CEN-CENELEC Management Centre has the same status as the official versions.

CEN members are the national standards bodies of Austria, Belgium, Bulgaria, Croatia, Cyprus, Czech Republic, Denmark, Estonia, Finland, France, Germany, Greece, Hungary, Iceland, Ireland, Italy, Latvia, Lithuania, Luxembourg, Malta, Netherlands, Norway, Poland, Portugal, Republic of North Macedonia, Romania, Serbia, Slovakia, Slovenia, Spain, Sweden, Switzerland, Turkey and United Kingdom.

Recipients of this draft are invited to submit, with their comments, notification of any relevant patent rights of which they are aware and to provide supporting documentation.

Warning : This document is not a European Standard. It is distributed for review and comments. It is subject to change without notice and shall not be referred to as a European Standard.

EUROPEAN COMMITTEE FOR STANDARDIZATION
COMITÉ EUROPÉEN DE NORMALISATION
EUROPÄISCHES KOMITEE FÜR NORMUNG

CEN-CENELEC Management Centre: Rue de la Science 23, B-1040 Brussels

© 2022 CEN All rights of exploitation in any form and by any means reserved worldwide for CEN national Members.

Ref. No. prEN 805:2022 E

Documents
Document Sharing Hub

Full document details: 23/30483756 DC

Contents

Page

European foreword 7
Introduction 8
1 Scope 9
2 Normative references 9
3 Terms and definitions 9
3.1 Pressures 10
3.2 System 11
3.3 Components 15
3.4 Diameters 17
3.5 Installation 17
3.6 Hydraulic design 19
3.7 Structural design 20
4 Requirements for water supply systems 20
4.1 Water quality 20
4.1.1 General 20
4.1.2 Materials 20
4.1.3 Prevention of back flow 21
4.1.4 Stagnation 21
4.1.5 Cross-connections with other systems 21
4.2 Planning horizon for water supply systems 21
4.3 Demand for water 22
4.3.1 Water demand estimates 22
4.3.2 Water for fire fighting 22
4.4 System hazards and security 22
5 Service levels 22
6 Rehabilitation 22
7 Design 22
7.1 Design objectives 22
7.2 Peak flow factors 23
7.3 Hydraulic design 23
7.3.1 Sizing 23
7.3.2 Mains 23
7.3.3 Network analysis 25
7.3.4 Service pipes 25
7.4 Structural design 25
7.4.1 General 25
7.4.2 Internal forces 25
7.4.3 External forces 26
7.4.4 Temperature range 26
7.4.5 Unbalanced thrust 26
7.4.6 Design requirements 26
7.4.7 Hydrostatic design requirements 26
7.4.8 Unforeseen ground conditions 27
7.5 System layout 27

AVA Documents
Document Sharing Hub
Full document details: 23/30483756 DC

7.5.1 Mains ... 27
7.5.2 Types of system configurations ... 28
7.5.3 Service pipes ... 28
7.5.4 Valves ... 28
7.5.5 Surge limiting equipment ... 29
7.6 Protection against aggressive environment ... 29
7.7 Reservoirs ... 29
7.8 Pumping stations ... 29
7.9 Planned Service Life ... 29
7.10 Documentation ... 30

8 General requirements for product standards ... 30
8.1 General ... 30
8.2 Materials ... 30
8.3 Dimensions ... 30
8.3.1 Nominal sizes ... 30
8.3.2 Internal diameters ... 31
8.3.3 Length and wall thickness ... 31
8.3.4 Geometry of pipes, fittings, and valves ... 31
8.3.5 Internal surface ... 31
8.3.6 Appearance and soundness ... 31
8.4 Structural design ... 32
8.5 Mechanical requirements ... 32
8.5.1 Circumferential resistance ... 32
8.5.2 Longitudinal resistance ... 32
8.6 Water tightness ... 32
8.7 Joints ... 32
8.7.1 General ... 32
8.7.2 Rigid joints ... 33
8.7.3 Adjustable joints ... 33
8.7.4 Flexible joints ... 33
8.8 Protective measures ... 33
8.9 Durability ... 34
8.10 Test methods ... 34
8.10.1 General ... 34
8.10.2 Measurement of diameter and wall thickness ... 34
8.10.3 Measurement of deviation from straightness of barrel ... 34
8.10.4 Measurement of deviation from squareness of component ends ... 34
8.10.5 Longitudinal resistance test for pipes ... 34
8.10.6 Crushing test for pipes with rigid behaviour ... 35
8.10.7 Ring stiffness test for pipes with flexible behaviour ... 35
8.10.8 Pressure tests ... 35
8.11 Interconnection of products ... 36
8.12 Quality management ... 36
8.13 Marking ... 36

9 Installation ... 36
9.1 General requirements ... 36
9.1.1 Qualifications ... 36
9.1.2 Rules for the execution of construction work ... 37
9.1.3 Transport and storage of pipeline components ... 37
9.1.4 Health and safety ... 37
9.2 Pipe trenches ... 37
9.2.1 Construction of pipe trenches; working space ... 37
9.2.2 Depth of cover ... 38

AVA Documents
Document Sharing Hub

Full document details: 23/30483756 DC

9.2.3 Bedding 38
9.3 Installation of pipeline components 38
9.3.1 Distances from underground installations 38
9.3.2 Protection of pipelines against contamination 38
9.3.3 Installation of valves, fittings, and other components 39
9.3.4 Connection to structures 39
9.3.5 Precautions against flotation 39
9.4 Pipe joints 39
9.4.1 General requirements 39
9.4.2 Unrestrained joints 39
9.4.3 Restrained joints 39
9.4.4 Welded joints 40
9.4.5 Lubricants for joints 40
9.5 Protection against corrosion and contamination 40
9.5.1 External protection 40
9.5.2 Internal protection 40
9.6 Embedment and main backfill 40
9.6.1 General 40
9.6.2 Selected material for the embedment 41
9.6.3 Execution of the embedment 41
9.6.4 Execution of the main backfill 41
9.6.5 Control of the degree of compaction 41
9.6.6 Diametral deflection of flexible pipes after installation 42
9.7 Records of tests during installation 42

10 Testing of pipelines 42
10.1 General requirements 42
10.2 Safety 42
10.2.1 Safety Equipment and clothing 42
10.2.2 Excavations 42
10.2.3 Filling and testing 42
10.3 Pressure test 43
10.3.1 Preparations 43
10.3.2 Test pressure 44
10.4 Testing procedure 44
10.4.1 General requirements 44
10.4.2 Pressure drop test for determine the air content 45
10.4.3 The main pressure test 45
10.4.4 Final system test 47
10.4.5 Recording test results 47

11 Preparation for commissioning 47
11.1 General 47
11.2 Preparation for disinfection 47
11.2.1 General requirements 47
11.2.2 Disinfection equipment 47
11.3 Selection of disinfectant 47
11.4 Disinfection procedures 47
11.4.1 General requirements 47
11.4.2 Flushing procedure 48
11.4.3 Static procedure 48
11.4.4 Dynamic procedure 48
11.5 Microbiological clearance and reporting 48

12 Additional requirements 48

Documents
Document Sharing Hub
Full document details: 23/30483756 DC

13 Operation ... 49
13.1 Inspection and monitoring ... 49
13.2 Maintenance ... 49
14 Updating of the documentation ... 50
Annex A (informative) Guidance to EN 805 ... 51
A.1 General ... 51
A.2 Pressures ... 51
A.3 Prevention of back siphonage ... 52
A.4 Water demand estimates ... 52
A.5 Water for fire-fighting ... 53
A.6 Service objectives ... 53
A.7 Peak flow factors ... 53
A.8 Sizing ... 53
A.9 Hydraulic roughness value ... 53
A.10 Hydraulic roughness value ... 54
A.11 Flow velocities ... 54
A.12 Local mains ... 55
A.13 Network analysis ... 55
A.14 Mains ... 55
A.15 Types of system configuration ... 56
A.16 Service pipes ... 58
A.17 Entry and release of air ... 58
A.18 Draining ... 58
A.19 Isolation ... 59
A.20 Hydrants ... 59
A.21 Protection against aggressive environment ... 59
A.22 Pumping stations ... 60
A.23 Structural design ... 60
A.24 Pressure drop test ... 62
A.25 Pressure-Testing procedures for PE.PVC-U and PVC-O thermoplastic pipelines ... 62
A.25.1 General ... 62
A.25.2 Determination of the test pressure ... 62
A.25.3 Selection of method for main test phase ... 64
A.25.4 Temperature and pressure-derating ... 64
A.25.5 Procedure test using contraction method ... 65
A.25.6 Procedure using the normal method ... 69
A.25.7 Visual inspection procedure ... 71
A.25.8 Visual inspection procedure ... 72

AVA Documents
Document Sharing Hub

Full document details: 23/30483756 DC

A.26 Selection of disinfectants **72**
Bibliography **74**

Documents
Document Sharing Hub
Full document details: 23/30483756 DC

European foreword

This document (prEN 805:2022) has been prepared by Technical Committee CEN/TC 164 “Water supply”, the secretariat of which is held by AFNOR.

This document is currently submitted to the CEN Enquiry.

This document supersedes EN 805:2000.

Technical experts have reviewed and refreshed all the clauses of the EN 805:2000 revision to bring this document up to date in particular the implications of climate change and adapting the water supply systems, security, pressure testing, record keeping, resilience of water supply and updates as a result of many constructive comments from active users of the standard across Europe. Many clauses have been refreshed and are not listed here in detail.

Documents
Document Sharing Hub
Full document details: 23/30483756 DC

Introduction

In specifying the requirements of this document due regard has been taken of the importance of a reliable and safe supply of water for human consumption without excluding other uses of the water from the supply system.

The widely varying water supply legislative requirements, populations, social and climatic conditions across Europe have also been taken into account.

This document does not make any implication with regard to ownership of or responsibility for pipes or other apparatus in the supply system.

Documents
Document Sharing Hub

Full document details: 23/30483756 DC

1 Scope

This document specifies:

— general requirements for water supply systems outside buildings including potable water mains and service pipes, service reservoirs, other facilities and raw water mains but excluding treatment works and water resources development;

— general requirements for components;

— general requirements for inclusion in product standards which may include specifications which are more stringent;

— requirements for installation, site testing and commissioning.

The requirements of this document apply to:

— the design and construction of new water supply systems;

— the extension of significant areas forming a coherent part of an existing water supply system;

— significant modification and/or rehabilitation of existing water supply systems;

— all those water infrastructure systems since they are key to meet the sustainable goals of the cities and to show the urgent need to invest in them in order to consider fundamental aspects, such as resilience or mitigation/adaptation to climate change.

NOTE It is not intended that existing water supply systems are to be altered to comply with this document, provided that there are no significant detrimental effects on water quantity, security, reliability and adequacy of the supply.

2 Normative references

The following documents are referenced in the text in such a way that some parts of these or their entire contents constitute requirements of this document. With dated references, only the referenced issue is applicable. With undated references, the last issue of the referenced document is applicable (including all changes).

EN 1295-1, *Structural design of buried pipelines under various conditions of loading — Part 1: General requirements*

EN 1508, *Water supply — Requirements for systems and components for the storage of water*

EN 681-1, *Elastomeric seals — Materials requirements for pipe joint seals used in water and drainage applications — Part 1: Vulcanized rubber*

ISO 55000, *Asset management — Overview, principles and terminology*

3 Terms and definitions

For the purposes of this document, the following definitions apply.

ISO and IEC maintain terminological databases for use in standardization at the following addresses:

— IEC Electropedia: available at https://www.electropedia.org/

— ISO Online browsing platform: available at https://www.iso.org/obp

Documents
Document Sharing Hub

Full document details: 23/30483756 DC

3.1 Pressures

For the designation of pressures in English, French and German see Table 1 and A.2.

Table 1 — Designation of pressures in English, French, German

Abbreviation a	**English**	**French**	**German**	
SP	service pressure	pression de service	Versorgungsdruck	System Related
OP	operating pressure	pression de fonctionnement	Betriebsdruck	
DP	design pressure	pression de calcul en régime permanent	Systembetriebsdruck	
MDP	maximum design pressure	pression maximale de calcul	höchster Systembetriebsdruck	
STP	system test pressure	pression d'épreuve du réseau	Systemprüfdruck	
PFA	allowable operating pressure	pression de fonctionnement admissible	zulässiger Bauteilbetriebsdruck	Component Related
PMA	allowable maximum operating pressure	pression maximale admissible	höchster zulässiger Bauteilbetriebsdruck	
PEA	allowable site test pressure	pression d'épreuve admissible sur chantier	zulässiger Bauteilprüfdruck auf der Baustelle	
a Valid for all language versions.				

3.1.1
allowable maximum operating pressure (PMA)
maximum pressure occurring from time to time, including surge, that a component is capable of withstanding in service

3.1.2
allowable operating pressure (PFA)
maximum hydrostatic pressure that a component is capable of withstanding continuously in service

3.1.3
allowable site test pressure (PEA)
maximum hydrostatic pressure that a newly installed component is capable of withstanding for a relatively short duration, in order to ensure the integrity and tightness of the pipeline

3.1.4
design pressure (DP)
maximum operating pressure of the system or of the pressure zone fixed by the designer considering future developments but excluding surge

Documents
Document Sharing Hub
Full document details: 23/30483756 DC

3.1.5
maximum design pressure (MDP)
maximum operating pressure of the system or of the pressure zone fixed by the designer considering future developments and including surge, where:

— MDP is designated MDPa, when there is a fixed allowance for surge;

— MDP is designated MDPc, when the surge is calculated

3.1.6
operating pressure (OP)
internal pressure which occurs at a particular time and at a particular point in the water supply system

3.1.7
pressure zones
areas of pressure ranges within a water supply system

3.1.8
service pressure (SP)
internal pressure delivered at the point of connection to the consumer's installation at zero flow in the service pipe

3.1.9
surge
rapid fluctuations of pressure caused by flow alterations over short periods of time

3.1.10
system test pressure (STP)
hydrostatic pressure applied to a newly laid pipeline in order to ensure its integrity and tightness

3.2 System

3.2.1
gravity system
system where flow and/or pressure are caused by the force of gravity. There are two kinds of such systems:

— pressurized gravity system, where the pipeline operates full;

— non-pressurized gravity system, where the pipeline operates partially full

3.2.2
local main
water main which connects principal main(s) with service pipes

3.2.3
potable water
water intended for human consumption as defined by the relevant national authorities

3.2.4
principal main
water main serving as a principal distributor within the supply area, normally without direct consumer connections

Documents
Document Sharing Hub
Full document details: 23/30483756 DC

3.2.5
pumped and gravity system
system where the gravity system and the pumped system are used, either separately or in combination, to provide the flow and/or pressure

3.2.6
pumping station
pumping installation designed to provide adequate pressure and flow within the distribution system. Three types can be distinguished (see Figure 1):

— main lift normally at the outlet of the treatment works, or source if there is no treatment, to provide flow to the service reservoir;

— intermediate to deliver flow on the way to a service reservoir or supply area;

— booster to pump directly from and to the area without storage

Documents
Document Sharing Hub
Full document details: 23/30483756 DC

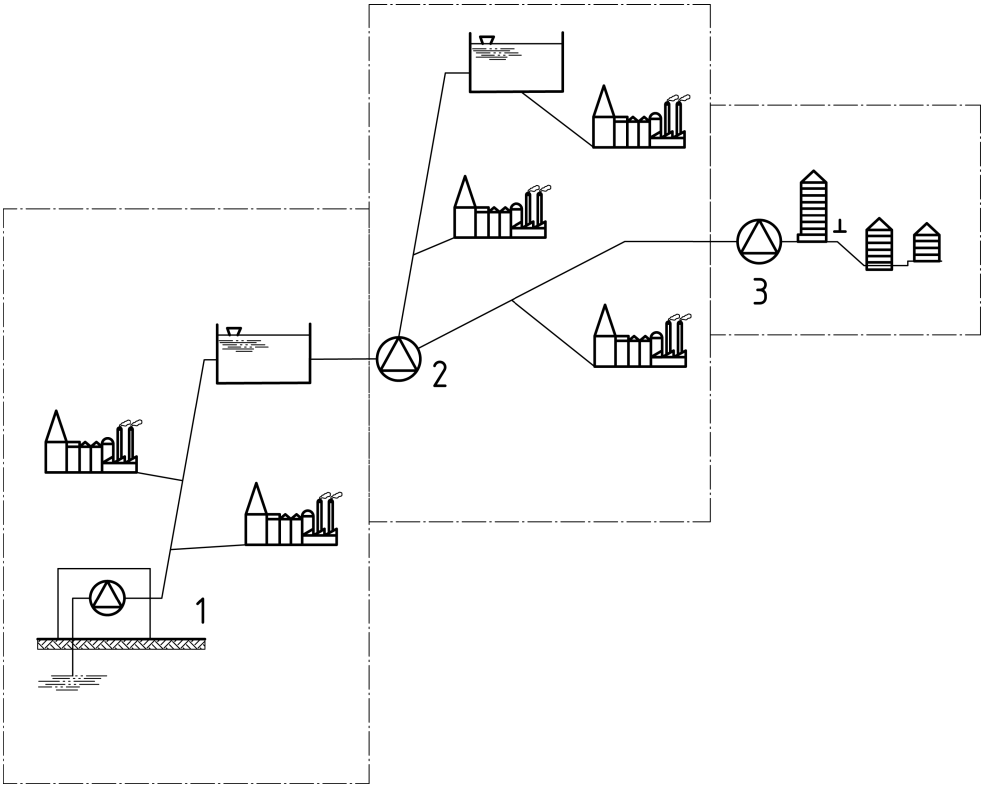

Key

1	main lift
2	intermediate
3	booster

Figure 1 — Example of different types of pumping stations

3.2.7
pumped system
system where flow and/or pressure are provided by means of one or more pumps and where the pipeline operates full

3.2.8
reservoir
storage facility for water

3.2.9
service pipe
water pipe which supplies water from the local main to the consumer

3.2.10
service reservoir
covered reservoir for potable water which includes water compartment(s), control building, operation equipment and access arrangement providing reserve supplies, pressure stability and balancing demand fluctuations

3.2.11
standby plant
plant or system, such as additional pumps or duplicate mains, installed to provide secondary means for the supply of services in the event of failure or malfunction of the normal operating unit

Documents
Document Sharing Hub

Full document details: 23/30483756 DC

3.2.12
trunk main
water main which interconnects source(s), treatment works, reservoir(s) and/or supply areas, normally without direct consumer connection(s)

3.2.13
water distribution system
part of the water supply system comprising pipelines, service reservoirs, pumping stations and other assets by which water is distributed to the consumers. It begins at the outlet from the water treatment works (or source, if there is no treatment) and ends at the point of connection to the consumer's installation (see Figure 2)

Documents
Document Sharing Hub
Full document details: 23/30483756 DC

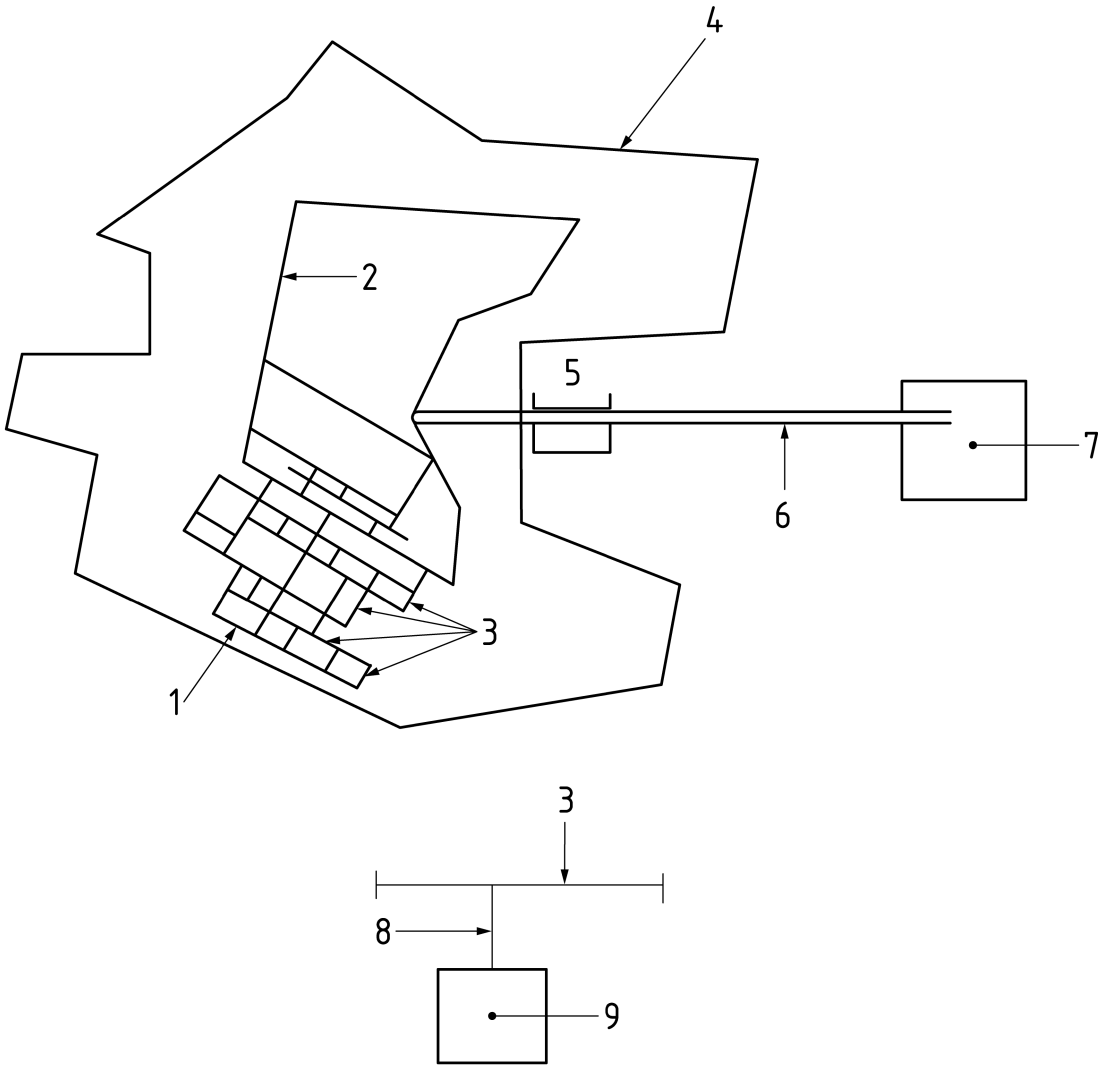

Key

1	network
2	principal main
3	local main
4	supply area
5	service reservoir (may be present)
6	trunk main
7	source or treatment works
8	service pipe
9	consumer

Figure 2 — Example of a water distribution system

3.3 Components

3.3.1
accessories
components, other than pipes, fittings or valves, which are used in a pipeline, e.g. glands, bolts, locking rings for joints, ferrules

Documents
Document Sharing Hub
Full document details: 23/30483756 DC

3.3.2
adjustable joint
joint which permits significant angular deflection at the time of installation but not thereafter

3.3.3
coating
additional material applied to the external surface of a component to protect it from corrosion, mechanical damage or chemical attack

3.3.4
ferrule
component used to connect a service pipe to a main, usually capable of shutting off the flow of water to the service pipe

3.3.5
fitting
component, other than a pipe, which allows pipeline deviation, change of direction or bore. In addition, flanged-socket pieces, flanged-spigot pieces and collars/couplings are defined as fittings

3.3.6
flexible joint
joint which permits significant angular deflection, both during and after installation and which can accept a slight offset of the centre line

3.3.7
flexible pipe
pipe whose load carrying capacity is limited by deformation (diametral deflection and/or strain) under load to the ultimate design criteria without breaking or overstressing (flexible behaviour)

3.3.8
joint
connection between the ends of two components including the means of sealing

3.3.9
lining
additional material applied to the internal surface of a component to protect it from corrosion, mechanical damage or chemical attack

3.3.10
pipe
component of uniform bore, normally straight in axis, having e.g. socket, spigot or flanged ends

3.3.11
pipe barrel
cylindrical part of the pipe with a uniform cross section excluding socket and spigot where appropriate

3.3.12
rigid joint
joint that does not permit significant angular deflection, either during or after installation

3.3.13
rigid pipe
pipe whose load carrying capacity is limited by breaking without significant deformation of its cross section (rigid behaviour)

Documents
Document Sharing Hub
Full document details: 23/30483756 DC

3.3.14
semi-rigid pipe
pipe whose load carrying capacity is limited either by deformation/overstressing (flexible behaviour) or by breaking (rigid behaviour) depending on its ring stiffness and/or the conditions of installation

3.3.15
valve
component isolating or controlling flow and pressure, e.g. isolating valve, control valve, pressure reducing valve, air valve, non-return valve, hydrant

3.4 Diameters

3.4.1
external diameter (OD)
mean external diameter of the pipe barrel at any cross section. For pipes with externally profiled barrels, the external diameter is taken as the maximum diameter when viewed in cross-section

3.4.2
internal diameter (ID)
mean internal diameter of the pipe barrel at any cross section

3.4.3
nominal size (DN/ID or DN/OD)
numerical designation of the size of a component, which is a whole number approximately equal to the actual dimension in millimetres. This applies to either the internal diameter (DN/ID) or the external diameter (DN/OD)

3.5 Installation

Installation terms are shown in Figure 3 a) and 3 b).

Documents
Document Sharing Hub
Full document details: 23/30483756 DC

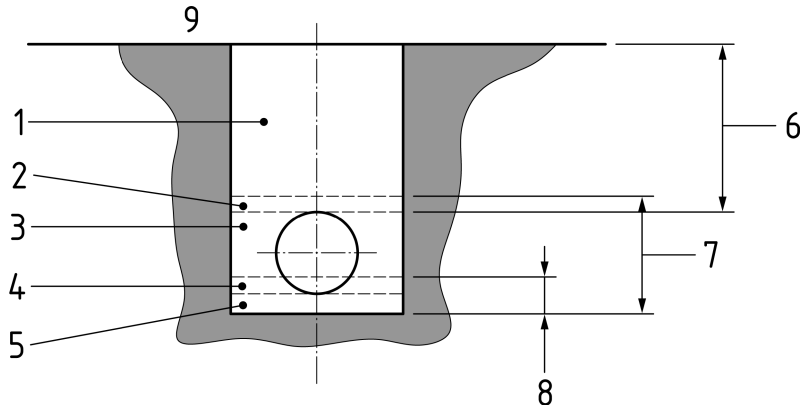

Key

1	main backfill including road construction, if any.
2	initial backfill
3	side fill
4	upper bedding
5	lower bedding
6	depth of cover
7	embedment
8	bedding
9	ground surface

a) Example of pipe laying in trenches

Documents
Document Sharing Hub
Full document details: 23/30483756 DC

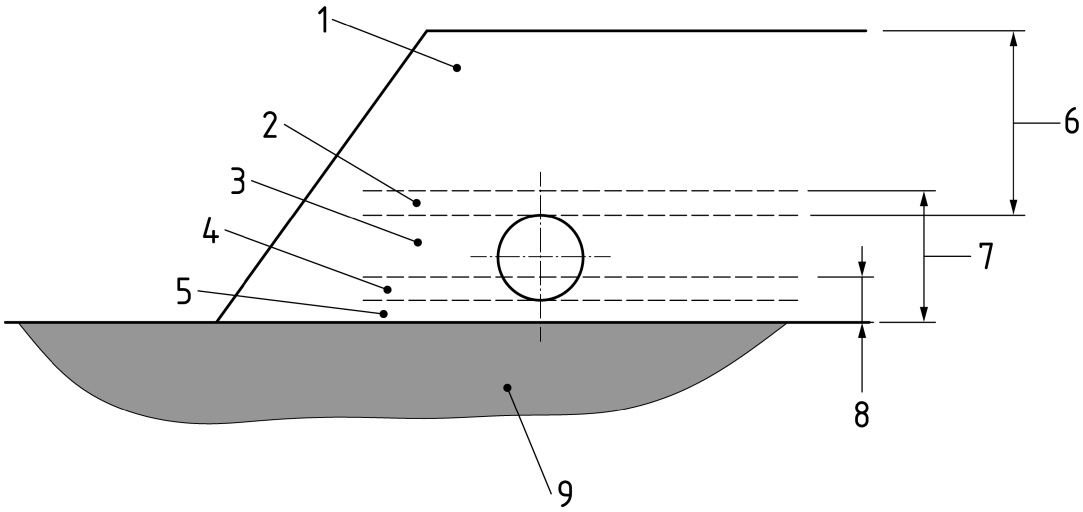

Key

1	main backfill including road construction, if any
2	initial backfill
3	side fill
4	upper bedding
5	lower bedding
6	depth of cover
7	embedment
8	bedding

b) Example of pipe laying in embankments

Figure 3 — Illustration of terms used in pipe installation

3.5.1
aggressive soil
soil which could have a corrosive or other adverse effect on a component, and which requires special consideration with respect to protective measures

3.5.2
cathodic protection
method of protecting metal components against corrosion in which the metal to be protected is maintained in a cathodic state relative to its surroundings

3.5.3
contaminated soil
soil which has been affected by previous land use or by direct or indirect infiltration of chemicals or other substances, such that it requires special consideration

3.5.4
depth of cover
distance from the crown of the pipe barrel or fitting to the existing or future surface of the terrain

3.6 Hydraulic design

3.6.1
back flow
flow of water from outside the system in a direction contrary to the intended one

Documents
Document Sharing Hub

Full document details: 23/30483756 DC

3.6.2
equivalent length
addition to the real length of a pipeline to simplify the allowance for local head losses at fittings, valves, etc., used for calculating the total head loss of a pipeline

3.6.3
peak flow factor
ratio between peak flow and average flow in the same period of time

3.6.4
water demand
estimated quantity of water required per unit of time

3.7 Structural design

3.7.1
bedding reaction angle
angle used for calculation purposes corresponding to the arc of soil bearing reaction applied at the underside of the component

3.7.2
ring stiffness
resistance of a pipe to diametral deflection in response to external loading applied along one longitudinal diametric plane

Note 1 to entry: This definition applies to both short- and long-term values.

3.7.3
ultimate load
load which causes failure as defined in the product standards.

3.7.4
reference service life
(RSL) of a pipeline is the service life which is known to be expected under a particular set of in-use conditions, and which may form the basis of estimating the service life under other in-use conditions

4 Requirements for water supply systems

4.1 Water quality

4.1.1 General

The water quality in the potable water supply system shall satisfy the requirements of national legislation, incorporating EU Directives and EFTA Regulations where applicable.

4.1.2 Materials

All parts of water supply systems in contact with potable water shall be designed and constructed using components and materials which meet the appropriate requirements such that there is no unacceptable deterioration of water quality.

Documents
Document Sharing Hub
Full document details: 23/30483756 DC

4.1.3 Prevention of back flow

Potable water supply systems shall be designed, equipped and installed to ensure the prevention of back flow. The location and operation of air valves and washouts shall avoid water entering the system (see A.3). Any equipment installed for this purpose shall meet the requirements of applicable standards, EN 1717 may be used as a guideline.

4.1.4 Stagnation

Potable water supply systems shall be designed, installed and operated to minimize water stagnation which would lead to unacceptable deterioration of water quality.

The following arrangements leading to stagnation shall be carefully considered:

— mains with dead ends;

— spurs serving hydrants;

— pipes laid in advance of future development;

— sections with permanently low flow rates;

— enhanced pipe diameters required for firefighting or other non-permanent purposes.

Where necessary, facilities shall be provided for mains flushing.

4.1.5 Cross-connections with other systems

The interconnection of potable water supply systems shall only be permitted if the chemical and physical properties are compatible for blending and there is no unacceptable deterioration of water quality.

Except when water is intended for blending in the distribution system to produce a potable supply there shall be no direct connection between potable water supply systems and systems containing non potable water, any other liquid or gas, except where suitable arrangements are made to incorporate a physical air gap or an appropriate antipollution device conforming to national standards, transposing ENs as available. Closed valves or non-return valves, except for air valves, washouts and hydrants, do not constitute an effective means of separation for the purpose of this clause.

4.1.6 Contaminated soil

Special considerations regarding chemical resistance and permeability of the materials used are needed for installations intended for use in contaminated soil.

4.2 Planning horizon for water supply systems

— Water supply systems shall be considered to fulfil their functional requirements to provide water now and for society for generations to come.

— Parts of water supply systems e.g. reservoirs, pumping stations and Pipeline Networks shall have their age profile set by the policy of the water undertaker.

— Future generations have to exist in a significantly different environment with more extreme weather events and impacts on the water supply systems due to flooding, wildfires, and droughts, as well as a future with a very different carbon economy and a reduction in pollution.

NOTE See 8.9.

AVA Documents
Document Sharing Hub

Full document details: 23/30483756 DC