Draft for Public Comment

Form 36

DPC: 24 / 30468695 DC

BSI Group Headquarters

389 Chiswick High Road London W4 4AL

Tel: +44 (0)20 8996 9000
Fax: +44 (0)20 8996 7400
www.bsigroup.com

Date: 27 September 2024
Origin: International

Latest date for receipt of comments: 19 November 2024

Project No. 2023/00173

Responsible committee: PRI/26 Burning behaviour of plastics and rubbers

Interested committees:

Title:	Draft BS ENISO 5659 - Plastics — Smoke generation — Determination of optical density by a single-chamber test

Please notify the secretary if you are aware of any keywords that might assist in classifying or identifying the standard or if the content of this standard

i) has any issues related to 3rd party IPR, patent or copyright
ii) affects other national standard(s)
iii) requires additional national guidance or information

WARNING: THIS IS A DRAFT AND MUST NOT BE REGARDED OR USED AS A BRITISH STANDARD.
THIS DRAFT IS NOT CURRENT BEYOND 19 November 2024

This draft is issued to allow comments from interested parties; all comments will be given consideration prior to publication. No acknowledgement will normally be sent. **See overleaf for information on the submission of comments.**

No copying is allowed, in any form, without prior written permission from BSI except as permitted under the Copyright, Designs and Patent Act 1988 or for circulation within a nominating organization for briefing purposes. Electronic circulation is limited to dissemination by e-mail within such an organization by committee members.

Further copies of this draft may be purchased from BSI Shop **http://shop.bsigroup.com**
or from BSI Customer Services, Tel: +44(0) 20 8996 9001 or email cservices@bsigroup.com.
British, International and foreign standards are also available from BSI Customer Services.

Information on the co-operating organizations represented on the committees referenced above may be obtained from
http://standardsdevelopment.bsigroup.com

Responsible Committee Secretary: **Mr Patrick Kells (BSI)**
Direct tel: **020 8996 7545**
E-mail: **patrick.kells@bsigroup.com**

Documents
Document Sharing Hub

Full document details: 24/30468695 DC

Introduction

This draft standard is based on national and international discussions. Your comments on this draft are invited and will assist in the preparation of the consequent standard.

For international standards, comments will be reviewed by the relevant UK national committee before sending the consensus UK vote and comments to the international committee, which will then decide appropriate action. If the international standard is approved, it is usual for the text to be published as a British Standard.

For national standards, comments will be reviewed by the relevant UK national committee and the resulting standards published as a British Standard.

UK Vote

Please indicate whether you consider the UK should submit a negative (with supporting technical reasons) or positive vote on this draft. Please indicate if you are aware of any reason why this draft standard should not be published as a British Standard.

Submission of Comments

- **Annotated drafts are not acceptable and will be rejected.**
- All comments should be submitted online at **https://standardsdevelopment.bsigroup.com/**. You will need to register in order to comment.

Template for comments and secretariat observations

Date: xx/xx/20xx	Document: ISO/DIS xxxx

1	2	(3)	4	5	(6)	7
MB	Clause No./ Subclause No./Annex **(e.g. 3.1)**	Paragraph/Figure/ Table/Note	**Type of comment**	**Commend (justification for change) by the MB**	**Proposed change by the MB**	**Secretariat observations on each comment submitted**
	3.1	Definition 1	ed	Definition is ambiguous and needs clarifying.	Amend to read '...so that the mains connector to which no connection...'	
	6.4	Paragraph 2	te	The use of the UV photometer as an alternative cannot be supported as serious problems have been encountered in its use in the UK.	Delete reference to UV photometer.	

Documents
Document Sharing Hub

Full document details: 24/30468695 DC

DRAFT International Standard

ISO/DIS 5659

ISO/TC **61**/SC **4**

Secretariat: **BSI**

Voting begins on:
2024-09-26

Voting terminates on:
2024-12-19

Plastics — Smoke generation — Determination of optical density by a single-chamber test

Plastiques — Production de fumée — Détermination de la densité optique par un essai en enceinte unique

ICS: 13.220.40; 83.080.01

This document is circulated as received from the committee secretariat.

ISO/CEN PARALLEL PROCESSING

THIS DOCUMENT IS A DRAFT CIRCULATED FOR COMMENTS AND APPROVAL. IT IS THEREFORE SUBJECT TO CHANGE AND MAY NOT BE REFERRED TO AS AN INTERNATIONAL STANDARD UNTIL PUBLISHED AS SUCH.

IN ADDITION TO THEIR EVALUATION AS BEING ACCEPTABLE FOR INDUSTRIAL, TECHNOLOGICAL, COMMERCIAL AND USER PURPOSES, DRAFT INTERNATIONAL STANDARDS MAY ON OCCASION HAVE TO BE CONSIDERED IN THE LIGHT OF THEIR POTENTIAL TO BECOME STANDARDS TO WHICH REFERENCE MAY BE MADE IN NATIONAL REGULATIONS.

RECIPIENTS OF THIS DRAFT ARE INVITED TO SUBMIT, WITH THEIR COMMENTS, NOTIFICATION OF ANY RELEVANT PATENT RIGHTS OF WHICH THEY ARE AWARE AND TO PROVIDE SUPPORTING DOCUMENTATION.

Reference number
ISO/DIS 5659:2024(en)

© ISO 2024

Documents
Document Sharing Hub

Full document details: 24/30468695 DC

COPYRIGHT PROTECTED DOCUMENT

© ISO 2024

All rights reserved. Unless otherwise specified, or required in the context of its implementation, no part of this publication may be reproduced or utilized otherwise in any form or by any means, electronic or mechanical, including photocopying, or posting on the internet or an intranet, without prior written permission. Permission can be requested from either ISO at the address below or ISO's member body in the country of the requester.

ISO copyright office
CP 401 • Ch. de Blandonnet 8
CH-1214 Vernier, Geneva
Phone: +41 22 749 01 11
Email: copyright@iso.org
Website: www.iso.org

Published in Switzerland

Documents
Document Sharing Hub
Full document details: 24/30468695 DC

Contents

Page

Foreword ... **v**
Introduction ... **vi**
1 Scope ... **1**
2 Normative references ... **1**
3 Terms and definitions ... **1**
4 Principles of the test ... **3**
5 Suitability of a material or product for testing ... **3**
5.1 Material or product geometry ... 3
5.2 Surface characteristics ... 3
5.3 Asymmetrical products ... 3
6 Specimen construction and preparation ... **4**
6.1 Number of specimens ... 4
6.2 Size of specimens ... 4
6.3 Specimen preparation ... 4
6.4 Conditioning ... 5
6.5 Wrapping of specimens ... 5
6.6 Dimensionally unstable materials ... 5
7 Apparatus and ancillary equipment ... **6**
7.1 General ... 6
7.2 Test chamber ... 6
7.2.1 Construction ... 6
7.2.2 Chamber pressure control facilities ... 7
7.2.3 Chamber wall temperature ... 10
7.3 Specimen support and heating arrangements ... 11
7.3.1 Radiator cone ... 11
7.3.2 Framework for support of the radiator cone, specimen holder and heat flux meter ... 11
7.3.3 Radiation shield ... 14
7.3.4 Heat flux meter ... 14
7.3.5 Specimen holder ... 15
7.3.6 Pilot burner ... 15
7.4 Gas supply ... 15
7.5 Photometric system ... 16
7.5.1 General ... 16
7.5.2 Light source ... 16
7.5.3 Photo detector ... 16
7.5.4 Additional equipment ... 18
7.6 Chamber leakage ... 18
7.7 Cleaning materials ... 18
7.8 Ancillary equipment ... 19
7.8.1 Balance (optional) ... 19
7.8.2 Timing device ... 19
7.8.3 Linear measuring devices ... 19
7.8.4 Auxiliary heater ... 19
7.8.5 Protective equipment ... 19
7.8.6 Recorder ... 19
7.8.7 Water-circulating device ... 19
7.8.8 Oxygen meter (optional) ... 19
8 Test environment ... **19**
9 Setting-up and calibration procedures ... **20**
9.1 General ... 20

© ISO 2024 – All rights reserved

Documents
Document Sharing Hub
Full document details: 24/30468695 DC

9.2 Alignment of photometric system ... 20
9.2.1 General ... 20
9.2.2 Beam collimation ... 20
9.2.3 Beam focusing ... 20
9.3 Selection of compensating filter(s) ... 20
9.4 Linearity check ... 21
9.5 Calibration of range-extension filter ... 21
9.6 Chamber leakage rate test ... 21
9.7 Burner calibration ... 22
9.8 Radiator cone calibration ... 22
9.9 Cleaning ... 22
9.10 Frequency of checking and calibrating procedure ... 23

10 Test procedure ... 23
10.1 General ... 23
10.2 Preparation of test chamber ... 23
10.3 Tests with pilot flame ... 23
10.4 Preparation of the photometric system ... 24
10.5 Loading the specimen ... 24
10.6 Recording of light transmission ... 24
10.7 Observations ... 24
10.8 Termination of test ... 25
10.9 Testing in different modes ... 25

11 Expression of results ... 26
11.1 Specific optical density, D_s ... 26
11.2 Clear-beam correction factor, D_c ... 26

12 Precision ... 26

13 Test report ... 27

Annex A (normative) **Calibration of heat flux meter ... 28**

Annex B (informative) **Variability in the specific optical density of smoke measured in the single-chamber test ... 29**

Annex C (informative) **Determination of mass optical density ... 31**

Annex D (informative) **Precision data from tests on intumescent materials ... 36**

Annex E (informative) **Guidance on optical density testing ... 38**

Annex F (informative) **Specific sample preparation ... 45**

Annex G (informative) **Standard reference materials ... 48**

Bibliography ... 49

© ISO 2024 – All rights reserved

Documents
Document Sharing Hub
Full document details: 24/30468695 DC

Foreword

ISO (the International Organization for Standardization) is a worldwide federation of national standards bodies (ISO member bodies). The work of preparing International Standards is normally carried out through ISO technical committees. Each member body interested in a subject for which a technical committee has been established has the right to be represented on that committee. International organizations, governmental and non-governmental, in liaison with ISO, also take part in the work. ISO collaborates closely with the International Electrotechnical Commission (IEC) on all matters of electrotechnical standardization.

The procedures used to develop this document and those intended for its further maintenance are described in the ISO/IEC Directives, Part 1. In particular the different approval criteria needed for the different types of ISO documents should be noted. This document was drafted in accordance with the editorial rules of the ISO/IEC Directives, Part 2 (see www.iso.org/directives).

Attention is drawn to the possibility that some of the elements of this document may be the subject of patent rights. ISO shall not be held responsible for identifying any or all such patent rights. Details of any patent rights identified during the development of the document will be in the Introduction and/or on the ISO list of patent declarations received (see www.iso.org/patents).

Any trade name used in this document is information given for the convenience of users and does not constitute an endorsement.

For an explanation on the voluntary nature of standards, the meaning of ISO specific terms and expressions related to conformity assessment, as well as information about ISO's adherence to the World Trade Organization (WTO) principles in the Technical Barriers to Trade (TBT) see the following URL: www.iso.org/iso/foreword.html.

This document was prepared by Technical Committee ISO/TC 61, *Plastics*, Subcommittee SC 4, *Burning behaviour*.

This first edition cancels and replaces the fourth edition of ISO 5659-2:2017, which has been technically revised.

© ISO 2024 – All rights reserved

Documents
Document Sharing Hub
Full document details: 24/30468695 DC

Introduction

Fire is a complex phenomenon; its development and effects depend upon a number of interrelated factors. The behaviour of materials and products depends upon the characteristics of the fire, the method of use of the materials and the environment in which they are exposed to (see also ISO/TS 3814 and ISO 13943).

A test such as is specified in this document deals only with a simple representation of a particular aspect of the potential fire situation, typified by a radiant heat source, and it cannot alone provide any direct guidance on behaviour or safety in fire. A test of this type may, however, be used for comparative purposes or to ensure the existence of a certain quality of performance (in this case, smoke production) considered to have a bearing on fire behaviour generally. It would be wrong to attach any other meaning to results from this test.

The term “smoke” is defined in ISO 13943 as a visible suspension of solid and/or liquid particles in gases resulting from incomplete combustion. It is one of the first response characteristics to be manifested and should almost always be taken into account in any assessment of fire hazard as it represents one of the greatest threats to occupants of a building or other enclosure, such as a ship or train, on fire.

The responsibility for the preparation of ISO 5659 was transferred during 1987 from ISO/TC 92 to ISO/TC 61 on the understanding that the scope and applicability of the standard for the testing of materials should not be restricted to plastics but should also be relevant to other materials where possible, including building materials.

© ISO 2024 – All rights reserved

Documents
Document Sharing Hub
Full document details: 24/30468695 DC

Plastics — Smoke generation — Determination of optical density by a single-chamber test

1 Scope

This document specifies a method of measuring smoke production from the exposed surface of specimens of materials or composites. It is applicable to specimens that have an essentially flat surface and do not exceed 25 mm in thickness when placed in a horizontal orientation and subjected to specified levels of thermal irradiance in a closed cabinet with or without the application of a pilot flame. This method of test is applicable to all plastics.

It is intended that the values of optical density determined by this test be taken as specific to the specimen or assembly material in the form and thickness tested and are not to be considered inherent, fundamental properties.

The test is intended primarily for use in research and development and fire safety engineering in buildings, trains, ships, etc. and not as a basis for ratings for building codes or other purposes. No basis is provided for predicting the density of smoke that can be generated by the materials upon exposure to heat and flame under other (actual) exposure conditions. This test procedure excludes the effect of irritants on the eye.

NOTE This test procedure addresses the loss of visibility due to smoke density, which generally is not related to irritancy potency (see Annex E).

It is emphasized that smoke production from a material varies according to the irradiance level to which the specimen is exposed. The results yielded from the method specified in this document are based on exposure to the specific irradiance levels of 25 kW/m^2 and 50 kW/m^2.

2 Normative references

The following documents are referred to in the text in such a way that some or all of their content constitutes requirements of this document. For dated references, only the edition cited applies. For undated references, the latest edition of the referenced document (including any amendments) applies.

ISO 291, *Plastics — Standard atmospheres for conditioning and testing*

ISO 13943, *Fire safety — Vocabulary*

ISO 14934-3, *Fire tests — Calibration and use of heat flux meters — Part 3: Secondary calibration method*

3 Terms and definitions

For the purposes of this document, the terms and definitions given in ISO 13943 and the following apply.

ISO and IEC maintain terminological databases for use in standardization at the following addresses:

— IEC Electropedia: available at https://www.electropedia.org/

— ISO Online browsing platform: available at https://www.iso.org/obp

3.1
assembly
fabrication of *materials* (3.6) and/or *composites* (3.2)

Note 1 to entry: Sandwich panels are an example of an assembly.

© ISO 2024 – All rights reserved

Documents
Document Sharing Hub
Full document details: 24/30468695 DC

Note 2 to entry: The assembly may include an air gap.

3.2
composite
combination of *materials* (3.6) which are generally recognized in building construction as discrete entities

Note 1 to entry: Coated or laminated materials are examples of composites.

3.3
essentially flat surface
surface which does not deviate from a plane by more than 1 mm

3.4
exposed surface
surface of the *product* (3.9) subjected to the heating conditions of the test

3.5
irradiance
radiant flux incident on an infinitesimal element of the surface containing the point divided by the area of that element

3.6
material
basic single substance or uniformly dispersed mixture

Note 1 to entry: Metal, stone, timber, concrete, mineral fibre and polymers are examples.

3.7
mass optical density
MOD
measure of the degree of opacity of smoke in terms of the mass loss of the *material* (3.6)

3.8
optical density of smoke
D
measure of the degree of opacity of smoke, taken as the negative common logarithm of the relative transmission of light

3.9
product
material (3.6), *composite* (3.2) or *assembly* (3.1) about which information is required

3.10
specific optical density
D_s
optical density multiplied by a factor which is calculated by dividing the volume of the test chamber by the *product* (3.9) of the exposed area of the *specimen* (3.11) and the path length of the light beam

Note 1 to entry: See 11.1.1.

3.11
specimen
representative piece of the product to be tested together with any substrate or surface coating

Note 1 to entry: The specimen may include an air gap.

3.12
intumescent material
Material (3.6), that expands in excess of normal thermal expansion under the action of heat normally generated by the fire.

Note 1 to entry: Generally, a material developing an expanded structure of thickness >10 mm during the test, with the cone heater 25 mm from the specimen, is considered as intumescent material.

© ISO 2024 – All rights reserved

Documents
Document Sharing Hub
Full document details: 24/30468695 DC

Note 2 to entry: Definition adapted from ISO 10294-5.

4 Principles of the test

Specimens of the product are mounted horizontally within a chamber and exposed to thermal radiation on their upper surfaces at selected levels of constant irradiance up to 50 kW/m^2.

The smoke evolved is collected in the chamber, which also contains photometric equipment. The attenuation of a light beam passing through the smoke is measured. The results are reported in terms of specific optical density.

5 Suitability of a material or product for testing

5.1 Material or product geometry

5.1.1 The method is applicable to essentially flat materials, products, composites or assemblies not exceeding 25 mm in thickness.

5.1.2 The method is sensitive to small variations in geometry, surface orientation, thickness (either overall or of the individual layers), mass and composition of the material, and so the results obtained by this method only apply to the thickness of the material or product as tested.

5.1.3 It is not possible to calculate the specific optical density of one thickness of a material or product from the specific optical density of another thickness of the material or product.

5.2 Surface characteristics

A material or product having one of the following properties is suitable for testing:

a) an essentially flat exposed surface;

b) a surface irregularity which is evenly distributed over the exposed surface provided that

   1) at least 50 % of the surface of a representative 100 mm^2 area lies within a depth of 10 mm from a plane taken across the highest points on the exposed surface or

   2) for surfaces containing cracks, fissures, or holes not exceeding 8 mm in width or 10 mm in depth, the total area of such cracks, fissures, or holes at the surface does not exceed 30 % of a representative 100 mm^2 area of the exposed surface.

When an exposed surface does not meet the requirements of either 5.2 a) or 5.2 b), the material or product shall be tested in a modified form complying as close as possible with the requirements given in 5.2. The test report shall state that the material or product has been tested in a modified form and clearly describe the modification.

5.3 Asymmetrical products

It is possible that a product submitted to this test will have faces which differ or contain laminations of different materials arranged in a different order in relation to the two faces. If either of the faces can be exposed in use within a room, cavity, or void, both faces shall be tested.

© ISO 2024 – All rights reserved

Documents
Document Sharing Hub
Full document details: 24/30468695 DC

6 Specimen construction and preparation

6.1 Number of specimens

6.1.1 The test sample shall comprise a minimum of 12 specimens if all four modes are to be tested: six specimens shall be tested at 25 kW/m^2 (three specimens with a pilot flame and three specimens without a pilot flame) and six specimens shall be tested at 50 kW/m^2 (three specimens with a pilot flame and three specimens without a pilot flame).

If fewer than four modes are to be tested, a minimum of three specimens per mode shall be tested.

6.1.2 An additional number of specimens as specified in 6.1.1 shall be used for each face, in accordance with the requirements of 5.2.

6.1.3 An additional 12 specimens (i.e. three specimens per test mode) shall be held in reserve if required by the modes specified in 10.9.

6.1.4 In case of dimensionally unstable materials (see clause 6.6), it is necessary to make a preliminary test with the cone heater at 50 mm from the specimen, so at least two additional specimens are required.

6.2 Size of specimens

6.2.1 The specimens shall be square, with sides measuring 75 mm ± 1 mm.

6.2.2 Materials of 25 mm nominal thickness or less shall be evaluated at their full thickness. For comparative testing, materials shall be evaluated at a thickness of 1,0 mm ± 0,1 mm. All materials consume oxygen when they burn in the chamber, and the smoke generation of some materials (especially rapid-burning or thick specimens) is influenced by the reduced oxygen concentration in the chamber. As far as possible, materials shall be tested in their end-use thickness.

6.2.3 Materials with a thickness greater than 25 mm shall be cut to give a specimen thickness of 25 mm ± 0,1 mm, in such a way that the original (uncut) face can be evaluated.

6.2.4 Specimens of multi-layer materials with a thickness greater than 25 mm, consisting of core material(s) with facings of different materials, shall be prepared as specified in 6.2.3 (see also 6.3.2).

6.3 Specimen preparation

6.3.1 The specimen shall be representative of the material and shall be prepared in accordance with the procedures described in 6.3.2 and 6.3.3. The specimens shall be cut, sawn, moulded or stamped from identical sample areas of the material, and records shall be kept of their thicknesses and, if required, their masses.

6.3.2 If flat sections of the same thickness and composition are tested in place of curved, moulded or speciality parts, this shall be stated in the test report. Any substrate or core materials for the specimens shall be the same as those used in practice.

6.3.3 When coating materials, including paints and adhesives, are tested with the substrate or core as used in practice, specimens shall be prepared following normal practice, and in such cases the method of application of the coating, the number of coats and the type of substrate shall be included in the test report.

6.3.4 This test method has been found suitable for applications outside the field of plastics, or to transformed products in their end-use shape. Such specific sampling conditions are proposed in Annex F.

© ISO 2024 – All rights reserved

Documents
Document Sharing Hub
Full document details: 24/30468695 DC

6.4 Conditioning

6.4.1 Before the test, specimens shall be conditioned to constant mass at a temperature of (23 ± 2) °C and a relative humidity of (50 ± 5) % in accordance with ISO 291.

Constant mass is considered to be reached when two successive weighing operations, carried out at an interval of 24 h, do not differ by more than 0,1 % of the mass of the test piece or 0,1 g, whichever is the greater. Materials, such as polyamides, which require more than one week of conditioning to reach equilibrium, may be tested after conditioning for a period specified by the sponsor. This period shall not be less than one week and shall be described in the test report.

6.4.2 While in the conditioning chamber, specimens shall be supported in racks so that air has access to all surfaces.

Forced-air movement in the conditioning chamber may be used to assist in accelerating the conditioning process.

The results obtained from this method are sensitive to small differences in specimen conditioning. It is important therefore to ensure that the requirements of 6.5 are followed carefully.

6.5 Wrapping of specimens

6.5.1 All specimens shall be covered across the back, along the edges and over the front surface periphery, leaving a central exposed specimen area of 65 mm × 65 mm, using a single sheet of aluminium foil (approximately 0,04 mm thick) with the dull side in contact with the specimen. Care shall be taken not to puncture the foil or to introduce unnecessary wrinkles during the wrapping operation. The foil shall be folded in such a way as to minimize losses of any melted specimen material at the bottom of the specimen holder. After mounting the specimen in its holder, any excess foil along the front edges shall be trimmed off.

6.5.2 Wrapped specimens of thickness up to 12,5 mm shall be backed with a sheet of non-combustible insulating board of oven-dry density 850 kg/m^3 ± 100 kg/m^3 and nominal thickness 12,5 mm and a layer of low-density (nominal 65 kg/m^3) refractory fibre blanket under the non-combustible board.

Wrapped specimens of thickness greater than 12,5 mm but less than 25 mm shall be backed with a layer of low-density (nominal 65 kg/m^3) refractory fibre blanket.

Wrapped specimens of a thickness of 25 mm shall be tested without any backing board or refractory fibre blanket.

6.5.3 For resilient materials, each specimen in its aluminium foil wrapper shall be installed in the holder in such a way that the exposed surface lies flush with the inside face of the opening of the specimen holder. Materials with uneven exposed surfaces shall not protrude beyond the plane of the opening in the specimen holder.

6.5.4 When thin impermeable specimens, such as thermoplastic films, become inflated during the test owing to gases trapped between the film and backing, they shall be maintained essentially flat by making two or three cuts (20 mm to 40 mm long) in the film to act as vents.

6.6 Dimensionally unstable materials

Samples that intumesce or deform so that they contact the pilot flame prior to ignition, or reach the level of the heater base plate after ignition, shall be tested with a separation of 50 mm between the base plate of the cone heater and the upper surface of the specimen. In this case the heater calibration (see 9.8) shall be performed with the heat flux meter positioned 50 mm below the cone heater base plate. It shall be stressed that the time to ignition measured with this separation is not comparable to that measured with the separation of 25 mm. If, when tested with a separation of 50 mm between the cone heater base plate and the upper surface of the specimen, the specimen still intumesces or deforms such that it contacts the pilot flame

© ISO 2024 – All rights reserved

Documents
Document Sharing Hub
Full document details: 24/30468695 DC

prior to ignition, or the upper specimen surface reaches the level of the cone heater baseplate, the specimen is not suitable for the testing to this document.

Other dimensionally unstable products, for example products that warp or shrink during testing, shall be restrained against excessive movement. This shall be accomplished with 4 tie wires, as described below. Metal wires of (1,0 ± 0,1) mm diameter and at least 350 mm long shall be used. The sample shall be prepared in the standard way as described in Clause 6.3. A tie wire is then looped around the sample holder and retainer frame assembly, so that it is parallel to and approximately 20 mm away from one of the 4 sides of the assembly. The ends of the wire are twisted together such that the wire is pulled firmly against the retainer frame. Excess wire is trimmed from the twisted section before testing. The 3 remaining wires shall be fitted around the specimen holder and retainer frame assembly in a similar manner, parallel to the three remaining sides.

Materials that distort so extensively that they cannot be held by 4 wires should be tested using the fine wire grid made of (0,8 ± 0,1) mm with wire spacing of (20 ± 2) mm.

Materials that intumesce in a fluid phase such that molten materials overflow the edge frame or seep between the edge frame and the specimen holder invalidate the test. Therefore, such materials should be tested without the edge frame and should be housed in 0,1 mm thick aluminium tray wrappings which extend 10 mm above the top edge of the test specimen.

7 Apparatus and ancillary equipment

7.1 General

The apparatus (see Figure 1) shall consist of an air-tight test chamber with provision for containing a specimen holder, radiator cone, pilot burner, light transmission and measuring system and other, ancillary facilities for controlling the conditions of operation during a test.

7.2 Test chamber

7.2.1 Construction

7.2.1.1 The test chamber (see Figure 1 and Figure 2) shall be fabricated from laminated panels, the inner surfaces of which shall consist of either a porcelain enamelled metal not more than 1 mm thick or an equivalent coated metal which is resistant to chemical attack and corrosion and capable of easy cleaning. The internal dimensions of the chamber shall be 914 mm ± 3 mm long, 914 mm ± 3 mm high and 610 mm ± 3 mm deep. It shall be provided with a hinged front-mounted door with an observation window and a removable opaque door cover to the window to prevent light entering the chamber. The door of the chamber shall occupy a complete side of the smoke chamber. A safety blow-out panel, consisting of a sheet of aluminium foil of thickness not greater than 0,04 mm and having a minimum area of 80 600 mm^2, shall be provided in the chamber, fastened in such a way as to provide an airtight seal. Other materials can be considered, as long as they cause the panel to rupture under the same pressure conditions as the aluminium sheet.

The blow-out panel may be protected by a stainless-steel wire mesh. It is important that any such mesh is spaced at least 50 mm from the blow-out panel to prevent any obstruction in the event of an explosion.

7.2.1.2 Two optical windows, each with a diameter of 75 mm, shall be mounted, one each in the top and bottom of the cabinet, at the position shown in Figure 2, with their interior faces flush with the outside of the chamber lining. The underside of the window in the floor shall be provided with an electric heater of approximately 9 W capacity in the form of a ring, which shall be capable of maintaining the upper surface of the window at a temperature just sufficient to minimize smoke condensation on that face (a temperature of 50 °C to 55 °C has been found suitable) and which shall be mounted around its edge so as not to interrupt the light path. Optical platforms 8 mm thick shall be mounted around the windows on the outside of the chamber and shall be held rigidly in position relative to each other by three metal rods, with a diameter of at least 12,5 mm, extending through the chamber and fastened securely to the platforms.

© ISO 2024 – All rights reserved

Documents
Document Sharing Hub
Full document details: 24/30468695 DC

7.2.1.3 Other openings in the chamber shall be provided for services as specified and where appropriate. They shall be capable of being closed so that a positive pressure up to 1,5 kPa (150 mm water gauge) above atmospheric pressure can be developed inside the chamber (see 7.2.2) and maintained when checked in accordance with 7.6 and 9.6. All components of the chamber shall be capable of withstanding a greater positive internal pressure than the safety blow-out panel.

7.2.1.4 An inlet vent with shutter shall be provided in the front (towards the top of the chamber) or on the roof of the chamber and away from the radiator cone, and an exhaust vent with shutter shall be provided in the bottom of the chamber connected to an extraction fan capable of creating a negative pressure of at least 0,5 kPa (50 mm water gauge). The outlet of the fan should be connected to the laboratory exhaust system, typically using flexible tubing with a diameter between 50 mm and 100 mm.

7.2.2 Chamber pressure control facilities

Provision shall be made for controlling the pressure inside the test chamber. A manometer, with a range of up to 1,5 kPa (150 mm water gauge) shall be provided for connection to a pressure regulator and to a tube in the top of the chamber. The manometer can be either electronic or a suitable fluid in a tube (water or an appropriate indicating fluid).

A suitable pressure regulator (see Figure 3) consists of a vented water-filled bottle and a length of flexible tubing of diameter 25 mm, inserted 100 mm below the water surface: the other end of the tubing is connected to the manometer and the chamber. The regulator shall be vented to the exhaust system.

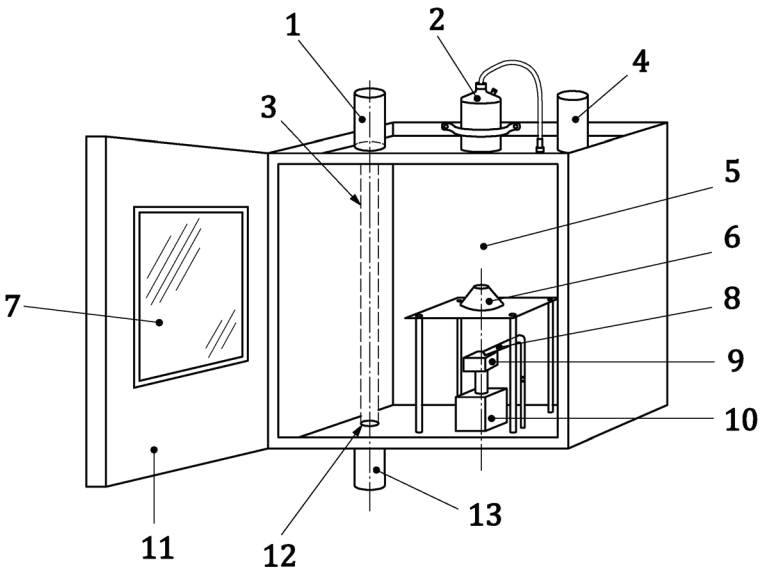

a) Schematic drawing of typical test apparatus

© ISO 2024 – All rights reserved

Documents
Document Sharing Hub
Full document details: 24/30468695 DC

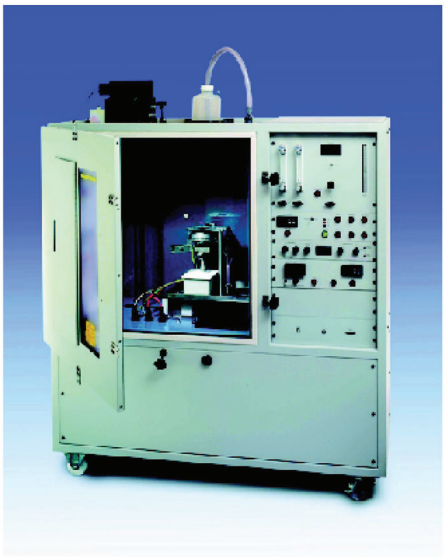

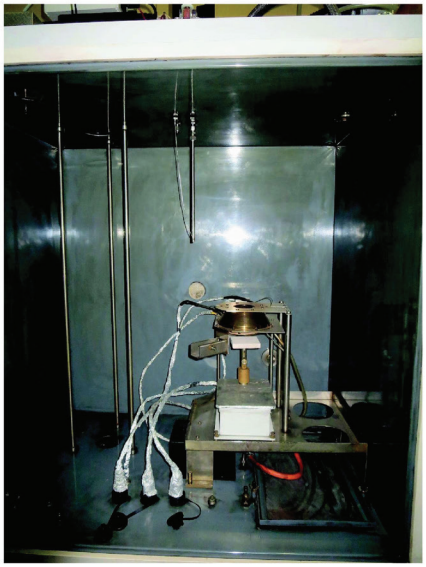

b) Typical example of test apparatus

Key

1 optical measurement system
2 pressure controller
3 optical path
4 upper vent (on top) and lower vent connected to exhaust fan (on bottom)
5 chamber
6 conical heater
7 window
8 pilot burner
9 specimen in specimen holder
10 weighing device
11 full front open door
12 optical system floor window
13 light source

Figure 1 — Test apparatus

© ISO 2024 – All rights reserved

Documents
Document Sharing Hub
Full document details: 24/30468695 DC

Dimensions in millimetres (not to scale)

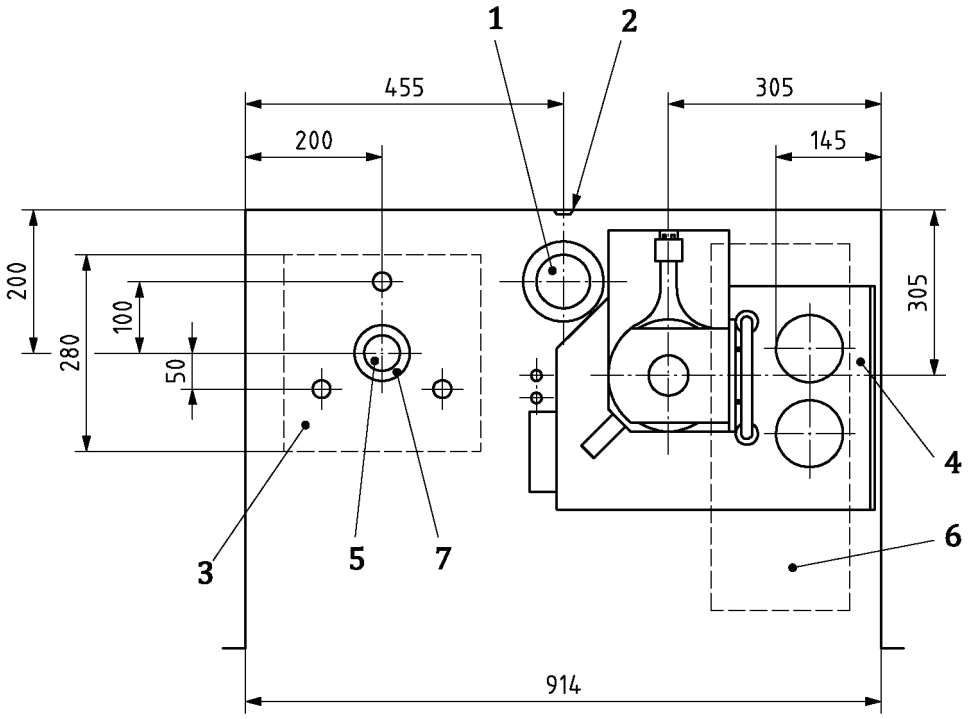

Key

1 exhaust vent
2 wall thermocouple
3 optical platform
4 radiator cone assembly
5 optical window
6 blow-out panel
7 window heater

Figure 2 — Plan view of typical chamber

© ISO 2024 – All rights reserved

Documents
Document Sharing Hub
Full document details: 24/30468695 DC

Dimensions in millimetres

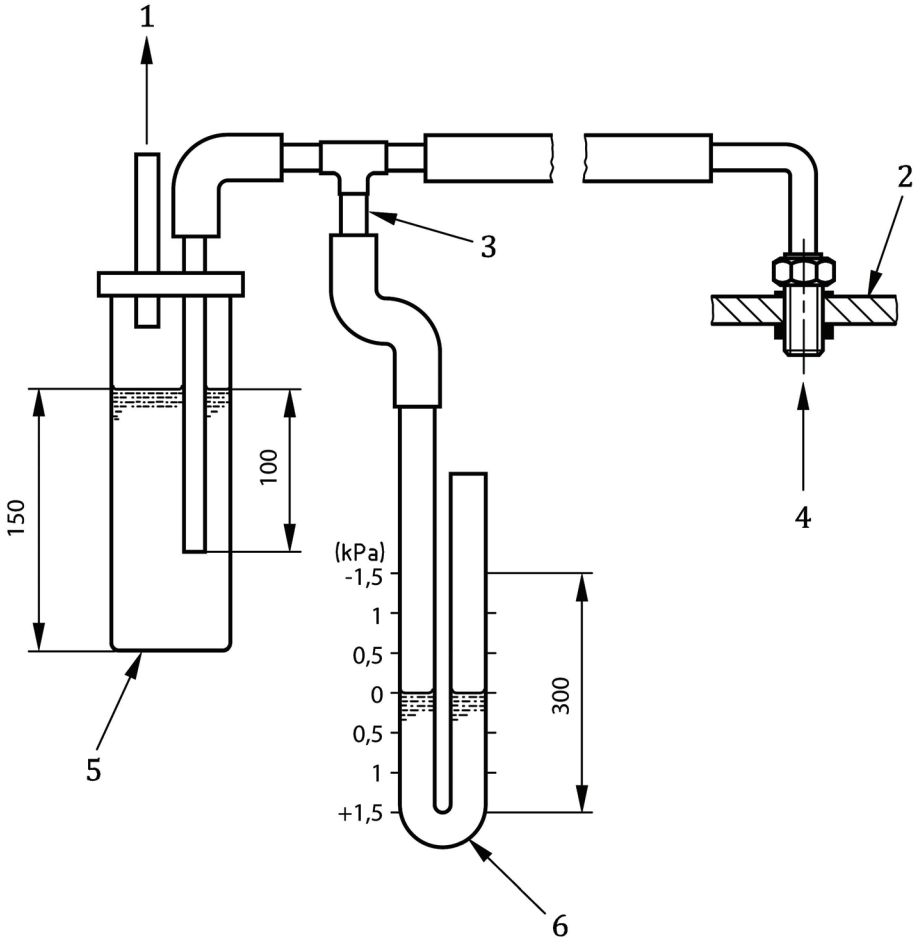

Key

1 to exhaust system
2 chamber ceiling
3 restriction to prevent chamber blow-out
4 effluent from chamber
5 water bottle
6 glass manometer opt U-tube (filled to zero mark with water-dye solution)

Figure 3 — Typical chamber pressure relief manometer

7.2.3 Chamber wall temperature

A thermocouple measuring junction, made from wires of diameter not greater than 1 mm, shall be mounted on the inside of the back wall of the chamber, at the geometric centre, by covering it with an insulating disc (such as polystyrene foam) having a thickness of approximately 6,5 mm and a diameter of not more than 20 mm, attached to the wall of the chamber with a suitable cement. The thermocouple junction shall be connected to a recorder or meter and the system shall be suitable for measuring temperatures in the range 35 °C to 80 °C (see 10.2.2).

© ISO 2024 – All rights reserved

Documents
Document Sharing Hub
Full document details: 24/30468695 DC