Draft for Public Comment

Form 36

DPC: 24/30486800 DC

BSI Group Headquarters

389 Chiswick High Road London W4 4AL

Tel: +44 (0)20 8996 9000
Fax: +44 (0)20 8996 7400
www.bsigroup.com

Date: 10 September 2024
Origin: European

Latest date for receipt of comments: 03 November 2024

Project No. 2024/00290

Responsible committee: MTE/23 Woodworking machines

Interested committees:

Title: Draft BS EN ISO 19085-21 Woodworking machines - Safety. Part 21: Double blade circular sawing machines for cross-cutting with integrated feed.

Please notify the secretary if you are aware of any keywords that might assist in classifying or identifying the standard or if the content of this standard

i) has any issues related to 3rd party IPR, patent or copyright
ii) affects other national standard(s)
iii) requires additional national guidance or information

WARNING: THIS IS A DRAFT AND MUST NOT BE REGARDED OR USED AS A BRITISH STANDARD. THIS DRAFT IS NOT CURRENT BEYOND 03 November 2024

This draft is issued to allow comments from interested parties; all comments will be given consideration prior to publication. No acknowledgement will normally be sent. **See overleaf for information on the submission of comments.**

No copying is allowed, in any form, without prior written permission from BSI except as permitted under the Copyright, Designs and Patent Act 1988 or for circulation within a nominating organization for briefing purposes. Electronic circulation is limited to dissemination by e-mail within such an organization by committee members.

Further copies of this draft may be purchased from BSI Shop http://shop.bsigroup.com or from BSI Customer Services, Tel: +44(0) 20 8996 9001 or email cservices@bsigroup.com. British, International and foreign standards are also available from BSI Customer Services.

Information on the co-operating organizations represented on the committees referenced above may be obtained from https://standardsdevelopment.bsigroup.com/.

Responsible Committee Secretary: Committee Service Centre (BSI)
Direct tel: 020 8996 7009
E-mail: csc@bsigroup.com

Documents
Document Sharing Hub
Full document details: 24/30486800 DC

Introduction

This draft standard is based on national and international discussions. Your comments on this draft are invited and will assist in the preparation of the consequent standard.

For international standards, comments will be reviewed by the relevant UK national committee before sending the consensus UK vote and comments to the international committee, which will then decide appropriate action. If the international standard is approved, it is usual for the text to be published as a British Standard.

For national standards, comments will be reviewed by the relevant UK national committee and the resulting standards published as a British Standard.

UK Vote

Please indicate whether you consider the UK should submit a negative (with supporting technical reasons) or positive vote on this draft. Please indicate if you are aware of any reason why this draft standard should not be published as a British Standard.

Submission of Comments

- **Annotated drafts are not acceptable and will be rejected.**
- All comments should be submitted online at **https://standardsdevelopment.bsigroup.com/**. You will need to register in order to comment.

Template for comments and secretariat observations

Date: xx/xx/20xx	Document: ISO/DIS xxxx

1	2	(3)	4	5	(6)	7
MB	Clause No./ Subclause No./Annex **(e.g. 3.1)**	Paragraph/ Figure/Table/Note	**Type of comment**	**Commend (justification for change) by the MB**	**Proposed change by the MB**	**Secretariat observations on each comment submitted**
	3.1	Definition 1	ed	Definition is ambiguous and needs clarifying.	Amend to read '...so that the mains connector to which no connection...'	
	6.4	Paragraph 2	te	The use of the UV photometer as an alternative cannot be supported as serious problems have been encountered in its use in the UK.	Delete reference to UV photometer.	

Documents
Document Sharing Hub

Full document details: 24/30486800 DC

DRAFT International Standard

ISO/DIS 19085-21

Woodworking machines — Safety —

Part 21: Double blade circular sawing machines for cross-cutting with integrated feed

ICS: 13.110; 79.120.10

ISO/TC **39**/SC **4**

Secretariat: **UNI**

Voting begins on:
2024-09-10

Voting terminates on:
2024-12-03

This document is circulated as received from the committee secretariat.

ISO/CEN PARALLEL PROCESSING

THIS DOCUMENT IS A DRAFT CIRCULATED FOR COMMENTS AND APPROVAL. IT IS THEREFORE SUBJECT TO CHANGE AND MAY NOT BE REFERRED TO AS AN INTERNATIONAL STANDARD UNTIL PUBLISHED AS SUCH.

IN ADDITION TO THEIR EVALUATION AS BEING ACCEPTABLE FOR INDUSTRIAL, TECHNOLOGICAL, COMMERCIAL AND USER PURPOSES, DRAFT INTERNATIONAL STANDARDS MAY ON OCCASION HAVE TO BE CONSIDERED IN THE LIGHT OF THEIR POTENTIAL TO BECOME STANDARDS TO WHICH REFERENCE MAY BE MADE IN NATIONAL REGULATIONS.

RECIPIENTS OF THIS DRAFT ARE INVITED TO SUBMIT, WITH THEIR COMMENTS, NOTIFICATION OF ANY RELEVANT PATENT RIGHTS OF WHICH THEY ARE AWARE AND TO PROVIDE SUPPORTING DOCUMENTATION.

Reference number
ISO/DIS 19085-21:2024(en)

© ISO 2024

Documents
Document Sharing Hub

Full document details: 24/30486800 DC

COPYRIGHT PROTECTED DOCUMENT

© ISO 2024

All rights reserved. Unless otherwise specified, or required in the context of its implementation, no part of this publication may be reproduced or utilized otherwise in any form or by any means, electronic or mechanical, including photocopying, or posting on the internet or an intranet, without prior written permission. Permission can be requested from either ISO at the address below or ISO's member body in the country of the requester.

ISO copyright office
CP 401 • Ch. de Blandonnet 8
CH-1214 Vernier, Geneva
Phone: +41 22 749 01 11
Email: copyright@iso.org
Website: www.iso.org

Published in Switzerland

Documents
Document Sharing Hub
Full document details: 24/30486800 DC

Contents

Page

Foreword ... **v**
Introduction ... **vi**
1 Scope ... **1**
2 Normative references ... **1**
3 Terms and definitions ... **2**
4 Safety requirements and measures for controls ... **6**
4.1 Safety and reliability of control systems ... 6
4.2 Control devices ... 6
4.3 Start ... 6
4.3.1 Direct start ... 6
4.3.2 Start via control power-on ... 6
4.3.3 Cutting stroke ... 6
4.4 Safe stops ... 7
4.4.1 General ... 7
4.4.2 Normal stop ... 7
4.4.3 Operational stop ... 7
4.4.4 Emergency stop ... 7
4.5 Braking function of tools ... 7
4.6 Mode selection ... 7
4.7 Tool speed changing ... 8
4.7.1 Speed changing by shifting the belts on the pulleys ... 8
4.7.2 Speed changing by incremental speed change motor ... 8
4.7.3 Infinitely variable speed by frequency inverter ... 8
4.8 Failure of any power supply ... 8
4.9 Manual reset control ... 8
4.10 Standstill detection and monitoring ... 8
4.11 Machine moving parts speed monitoring ... 8
4.12 Time delay ... 8
4.13 Teleservice ... 8
4.14 Power-operated adjustments ... 8
5 Safety requirements and measures for protection against mechanical hazards ... **9**
5.1 Stability ... 9
5.2 Risk of break-up during operation ... 9
5.3 Tool and tool fixing design ... 10
5.3.1 General ... 10
5.3.2 Spindle locking ... 10
5.3.3 Circular saw blade fixing device ... 10
5.3.4 Flange dimension for circular saw blades ... 10
5.4 Braking ... 10
5.4.1 Braking of tools ... 10
5.4.2 Maximum run-down time ... 10
5.4.3 Brake release ... 10
5.5 Safeguards ... 10
5.5.1 Fixed guards ... 10
5.5.2 Interlocking moveable guards ... 10
5.5.3 Hold-to-run control ... 11
5.5.4 Two-hand control ... 11
5.5.5 Electro-sensitive protective equipment (ESPE) ... 11
5.5.6 Pressure sensitive protective equipment (PSPE) ... 11
5.5.7 Enabling control ... 11
5.6 Prevention of access to hazardous moving parts ... 11
5.6.1 Safeguarding of the saw blades in the rest position on downwards-cutting machines ... 12

© ISO 2024 – All rights reserved

Documents
Document Sharing Hub
Full document details: 24/30486800 DC

5.6.2 Safeguarding of the saw blades in the rest position on horizontal and upward cutting machines 14
5.6.3 Safeguarding of the saw blade during the cutting stroke on semi-automatic machines 14
5.6.4 Safeguarding of automatic machines 15
5.7 Impact hazard 15
5.8 Clamping devices 15
5.9 Measures against ejection 15
5.9.1 General 15
5.9.2 Guards materials and characteristics 16
5.10 Workpiece supports and guides 16
5.10.1 Workpiece supports 16
5.10.2 Workpiece guides 17

6 Safety requirements and measures for protection against other hazards 17
6.1 Fire 17
6.2 Noise 17
6.2.1 Noise reduction at the design stage 17
6.2.2 Noise emission measurement and declaration 17
6.3 Emission of chips and dust 17
6.4 Electricity 17
6.5 Ergonomics and handling 17
6.6 Lighting 18
6.7 Pneumatics 18
6.8 Hydraulics 18
6.9 Electromagnetic compatibility 18
6.10 Laser 18
6.11 Static electricity 18
6.12 Errors of fitting 18
6.13 Isolation 18
6.14 Maintenance 18
6.15 Relevant but not significant hazards 18

7 Information for use 18
7.1 Warning devices 18
7.2 Marking 19
7.2.1 General 19
7.2.2 Additional markings 19
7.3 Instruction handbook 19
7.3.1 General 19
7.3.2 Additional information 19

Annex A (informative) **List of significant hazards 21**

Annex B (informative) **Performance levels required 23**

Annex C (informative) **Stability test 25**

Annex D (normative) **Test for braking function 26**

Annex E (normative) **Impact test for guards 27**

Annex F (normative) **Noise test code 28**

Annex ZA (informative) **Relationship between this European Standard and the essential requirements of Directive 2006/42/EC aimed to be covered 31**

Bibliography 33

© ISO 2024 – All rights reserved

Documents
Document Sharing Hub
Full document details: 24/30486800 DC

Foreword

ISO (the International Organization for Standardization) is a worldwide federation of national standards bodies (ISO member bodies). The work of preparing International Standards is normally carried out through ISO technical committees. Each member body interested in a subject for which a technical committee has been established has the right to be represented on that committee. International organizations, governmental and non-governmental, in liaison with ISO, also take part in the work. ISO collaborates closely with the International Electrotechnical Commission (IEC) on all matters of electrotechnical standardization.

The procedures used to develop this document and those intended for its further maintenance are described in the ISO/IEC Directives, Part 1. In particular, the different approval criteria needed for the different types of ISO documents should be noted. This document was drafted in accordance with the editorial rules of the ISO/IEC Directives, Part 2 (see www.iso.org/directives).

ISO draws attention to the possibility that the implementation of this document may involve the use of (a) patent(s). ISO takes no position concerning the evidence, validity or applicability of any claimed patent rights in respect thereof. As of the date of publication of this document, ISO had not received notice of (a) patent(s) which may be required to implement this document. However, implementers are cautioned that this may not represent the latest information, which may be obtained from the patent database available at www.iso.org/patents. ISO shall not be held responsible for identifying any or all such patent rights.

Any trade name used in this document is information given for the convenience of users and does not constitute an endorsement.

For an explanation of the voluntary nature of standards, the meaning of ISO specific terms and expressions related to conformity assessment, as well as information about ISO's adherence to the World Trade Organization (WTO) principles in the Technical Barriers to Trade (TBT), see www.iso.org/iso/foreword.html.

This document was prepared by Technical Committee ISO/TC 39, *Machine tools*, Subcommittee SC 4 *Woodworking machines,* in collaboration with the European Committee for Standardization (CEN) Technical Committee CEN/TC 142, *Woodworking machines,* in accordance with the Agreement on technical cooperation between ISO and CEN (Vienna Agreement).

This document replaces EN 1870-9:2012, which has been technically revised.

A list of all parts in the ISO 19085 series can be found on the ISO website.

Any feedback or questions on this document should be directed to the user's national standards body. A complete listing of these bodies can be found at www.iso.org/members.html.

© ISO 2024 – All rights reserved

Documents
Document Sharing Hub
Full document details: 24/30486800 DC

Introduction

The ISO 19085 series of provides technical safety requirements for the design and construction of woodworking machinery, as well as for the content of the relevant instruction handbook. It concerns designers, manufacturers, suppliers and importers of the machines specified in the Scope.

This document is a type-C standard as defined in ISO 12100:2010.

This document is of relevance, in particular, for the following stakeholder groups representing the market players with regard to machinery safety:

— machine manufacturers (small, medium and large enterprises);

— health and safety bodies (e.g. regulators, accident prevention organisations, market surveillance).

Others can be affected by the level of machinery safety achieved with the means of the document by the above-mentioned stakeholder groups:

— machine users/employers (small, medium and large enterprises);

— machine users/employees (e.g. trade unions, organizations for people with special needs);

— service providers, for example, for maintenance (small, medium and large enterprises);

— consumers (in case of machinery intended for use by consumers).

The above-mentioned stakeholder groups have been given the possibility to participate in the drafting process of this document.

The machinery concerned and the extent to which hazards, hazardous situations or hazardous events are covered are indicated in the Scope of this document.

When requirements of this type-C standard are different from those which are stated in type-A or type-B standards (as defined in ISO 12100:2010), the requirements of this type-C standard take precedence over the requirements of the other standards for machines that have been designed and built according to the requirements of this type-C standard.

The full set of requirements for a particular type of woodworking machine are those given in the part of the ISO 19085 series applicable to that type, together with the relevant requirements from ISO 19085-1:2021, to the extent specified in the Scope of the applicable part of the ISO 19085 series.

As far as possible, the safety requirements of parts of the ISO 19085 series refer to the relevant clauses of ISO 19085-1:2021. Each part includes replacements and additions to the common requirements given in ISO 19085-1:2021.

All parts of the ISO 19085 series have the same structure, so that reference to ISO 19085-1:2021 is made always and only from and to the same subclause number, last indent.

Clauses 1 to 3 are specific to each part and, therefore are distinct from ISO 19085-1:2021, Clauses 1 to 3.

For Clauses 4 to 7 and the annexes, each subclause in ISO 19085-1:2021, is cited as:

— confirmed as a whole;

— confirmed with additions;

— excluded in total; or

— replaced with specific text.

This is indicated by one of the following possible statements:

— “ISO 19085-1:2021, [subclause/Annex], applies.”;

© ISO 2024 – All rights reserved

Documents
Document Sharing Hub
Full document details: 24/30486800 DC

— "ISO 19085-1:2021, [subclause/Annex], applies with the following additions." or "ISO 19085-1:2021, [subclause/Annex], applies with the following additions, subdivided into further specific subclauses.";

— "ISO 19085-1:2021, [subclause/Annex], does not apply.";

— "ISO 19085-1:2021, [subclause/Annex], is replaced by the following text." or "ISO 19085-1:2021, [subclause/Annex], is replaced by the following text, subdivided into further specific subclauses.".

Other subclauses and annexes specific to this document are indicated by the introductory sentence: "Subclause/Annex specific to this document.".

© ISO 2024 – All rights reserved

Documents
Document Sharing Hub
Full document details: 24/30486800 DC

Documents
Document Sharing Hub

Woodworking machines — Safety —

Part 21: Double blade circular sawing machines for cross-cutting with integrated feed

1 Scope

This document specifies the safety requirements and measures for double blade circular sawing machines for cross-cutting with integrated feed of the cutting-stroke, with manual loading and/or unloading of the workpiece and capable of continuous production use, hereinafter referred to also as “machines”.

The machines are designed to cut solid wood and material with similar physical characteristics to wood as well as:

— aluminium profiles also filled or composed with plastic or foam or rubber based insulating materials;

— composite materials, with core consisting of e.g. polyurethane or mineral material, laminated with light alloy;

— polymer-matrix composite materials and reinforced with thermoplastic or thermoset or elastomeric materials;

— fibreglass;

— composite bars made from the materials listed above.

This document deals with all significant hazards, hazardous situations and events as listed in Annex A relevant to the machines when operated, adjusted and maintained as intended and under the conditions foreseen by the manufacturer; reasonably foreseeable misuse has been considered too. Transport, assembly, dismantling, disabling and scrapping phases have also been taken into account.

This document does not apply to:

a) machines for cross-cutting logs;

b) machines intended for use in potentially explosive atmosphere;

c) machines manufactured prior to the publication of this document.

2 Normative references

The following documents are referred to in the text in such a way that some or all of their content constitutes requirements of this document. For dated references, only the edition cited applies. For undated references, the latest edition of the referenced document (including any amendments) applies.

ISO 12100:2010, *Safety of machinery — General principles for design — Risk assessment and risk reduction*

ISO 13855:2010, *Safety of machinery — Positioning of safeguards with respect to the approach speeds of parts of the human body*

ISO 13857:2019, *Safety of machinery — Safety distances to prevent hazard zones being reached by upper and lower limbs*

© ISO 2024 – All rights reserved

Documents
Document Sharing Hub
Full document details: 24/30486800 DC

ISO 19085-1:2021, *Woodworking machines — Safety — Part 1: Common requirements*

3 Terms and definitions

For the purposes of this document, the terms and definitions given in ISO 12100:2010, ISO 19085-1:2021 and the following apply.

ISO and IEC maintain terminology databases for use in standardization at the following addresses:

— ISO Online browsing platform: available at https://www.iso.org/obp

— IEC Electropedia: available at https://www.electropedia.org/

3.1
double blade circular sawing machine for cross-cutting with integrated feed
machine fitted with two sawing heads, each with one sawing unit for cross-cutting with power-operated *cutting stroke* (3.3), where the workpiece is stationary during cutting

Note 1 to entry: One or both sawing heads (see Figure 1, key 1 and 2) can be manually or power-operated moveable for horizontal positioning.

Note 2 to entry: The saw units (see Figure 1, key 3) can be manually or power-operated tilted or pivoted or both.

Note 3 to entry: The workpiece can be manually or automatically positioned for cutting to pre-selected lengths.

3.2
workpiece positioning mechanism
mechanism using the clamping system and the power-operated horizontal positioning capability of a movable saw unit to feed the workpiece to the intended position for cross cutting to the desired length

Note 1 to entry: The workpiece positioning mechanism can be used, for example, to allow processing workpieces longer or shorter respectively than the maximum or minimum distance between the saw units.

Note 2 to entry: When the workpiece positioning mechanism is used, usually only one saw blade is operating during the cutting stroke.

3.3
cutting stroke
feed movement of the saw unit incorporating the tool to perform the cut immediately followed by the return of the saw unit to its *rest position* (3.7)

Note 1 to entry: The cutting stroke can be downward, horizontal or upward. See Figure 1 a) for a manual machine with downward cutting stroke, where only the saw unit feed for the cutting stroke is power-operated, Figure 1 b) for a fully power-operated machine with horizontal cutting stroke, and Figure 1 c) for a fully power-operated machine with upward cutting stroke.

3.4
cutting cycle
<automatic machines> automatic sequence of movements of one or both sawing heads for positioning to pre-selected lengths, of the saw units for positioning to pre-selected angles and inclinations, and *cutting stroke* (3.3)

Note 1 to entry: More cutting cycles can be repeated automatically if pre-selected.

Note 2 to entry: see Figure 1 d) for an example of an automatic machine.

© ISO 2024 – All rights reserved

Documents
Document Sharing Hub
Full document details: 24/30486800 DC

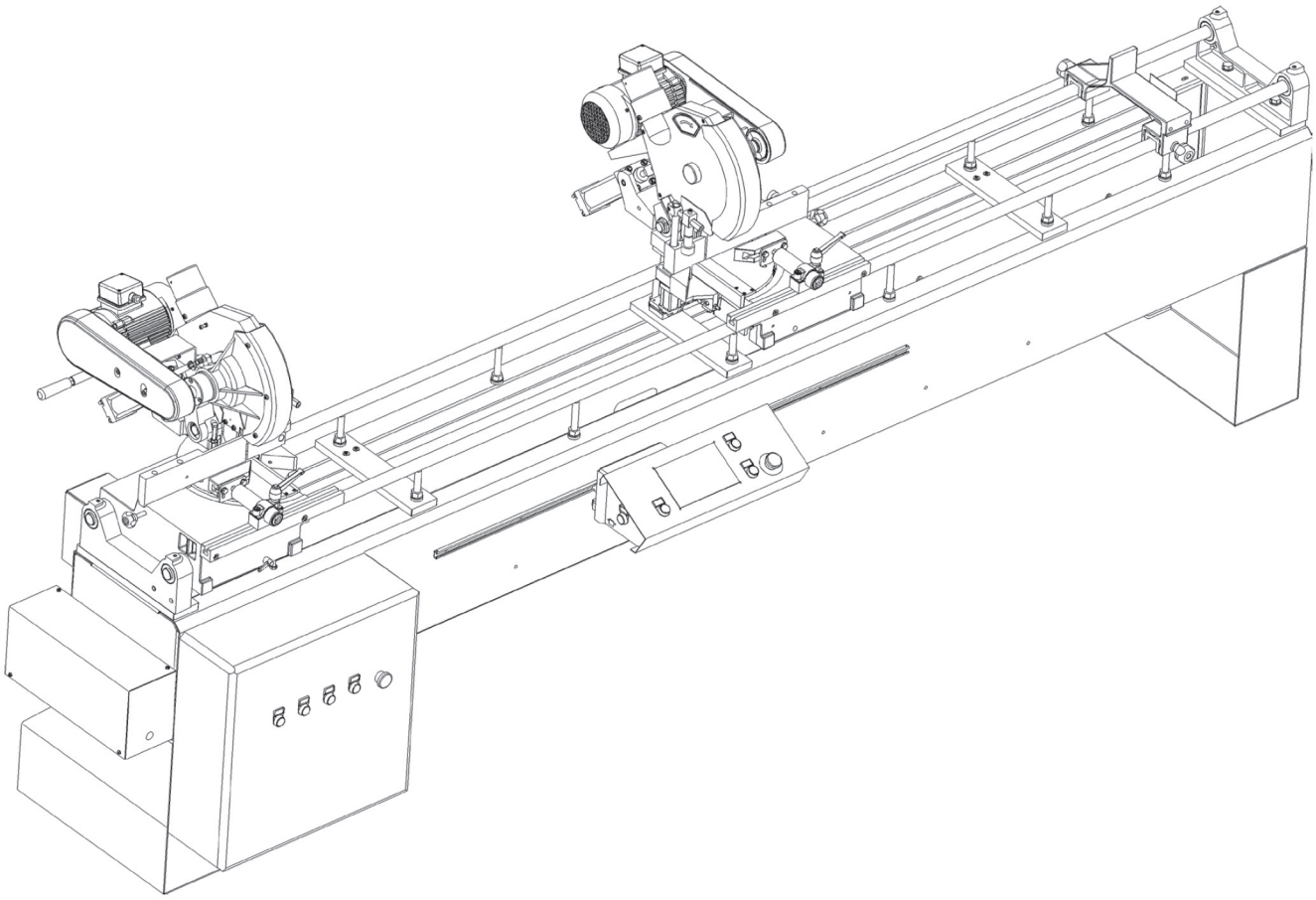

a) machine with downward cutting stroke and manually moveable saw head

© ISO 2024 – All rights reserved

Documents
Document Sharing Hub
Full document details: 24/30486800 DC