Draft for Public Comment

Form 36

DPC: 24/30496146 DC

BSI Group Headquarters

389 Chiswick High Road London W4 4AL

Tel: +44 (0)20 8996 9000
Fax: +44 (0)20 8996 7400
www.bsigroup.com

Date: 05 July 2024
Origin: International

Latest date for receipt of comments: 31 July 2024

Project No. 2021/01546

Responsible committee: PEL/38 Instrument transformers

Interested committees:

Title: Draft BS EN IEC 61869-8 Instrument transformers. Part 8: Specific requirements for Electronic Current Transformers.
Please notify admin.start@bsigroup.com if you are aware of any keywords that might assist in clarifying or identifying the standard or of the content of this standard: i) has any issues related to 3rd party IPR, patent or copyright ii) affects other national standard(s) iii) requires additional national guidance or information

WARNING: THIS IS A DRAFT AND MUST NOT BE REGARDED OR USED AS A BRITISH STANDARD. THIS DRAFT IS NOT CURRENT BEYOND 31 July 2024

This draft is issued to allow comments from interested parties; all comments will be given consideration prior to publication. No acknowledgement will normally be sent. **See overleaf for information on the submission of comments.**

No copying is allowed, in any form, without prior written permission from BSI except as permitted under the Copyright, Designs and Patent Act 1988 or for circulation within a nominating organization for briefing purposes. Electronic circulation is limited to dissemination by e-mail within such an organization by committee members.

Further copies of this draft may be purchased from BSI Shop http://shop.bsigroup.com or from BSI Customer Services, Tel: +44(0) 20 8996 9001 or email cservices@bsigroup.com. British, International and foreign standards are also available from BSI Customer Services.

Information on the co-operating organizations represented on the committees referenced above may be obtained from https://standardsdevelopment.bsigroup.com/.

Documents
Document Sharing Hub

Full document details: 24/30496146 DC

Introduction

This draft standard is based on national and international discussions. Your comments on this draft are invited and will assist in the preparation of the consequent standard.

For international standards, comments will be reviewed by the relevant UK national committee before sending the consensus UK vote and comments to the international committee, which will then decide appropriate action. If the international standard is approved, it is usual for the text to be published as a British Standard.

For national standards, comments will be reviewed by the relevant UK national committee and the resulting standards published as a British Standard.

UK Vote

Please indicate whether you consider the UK should submit a negative (with supporting technical reasons) or positive vote on this draft. Please indicate if you are aware of any reason why this draft standard should not be published as a British Standard.

Submission of Comments

- **Annotated drafts are not acceptable and will be rejected.**
- All comments should be submitted online at **https://standardsdevelopment.bsigroup.com/**. You will need to register in order to comment.

Template for comments and secretariat observations

Date: xx/xx/20xx	Document: ISO/DIS xxxx

1	2	(3)	4	5	(6)	7
MB	Clause No./ Subclause No./Annex **(e.g. 3.1)**	Paragraph/ Figure/Table/Note	**Type of comment**	**Commend (justification for change) by the MB**	**Proposed change by the MB**	**Secretariat observations on each comment submitted**
	3.1	Definition 1	ed	Definition is ambiguous and needs clarifying.	Amend to read '...so that the mains connector to which no connection...'	
	6.4	Paragraph 2	te	The use of the UV photometer as an alternative cannot be supported as serious problems have been encountered in its use in the UK.	Delete reference to UV photometer.	

Documents
Document Sharing Hub

Full document details: 24/30496146 DC

38/655/CD

COMMITTEE DRAFT (CD)

PROJECT NUMBER: **IEC 61869-8 ED1**	
DATE OF CIRCULATION: **2021-06-04**	CLOSING DATE FOR COMMENTS: **2021-08-27**
SUPERSEDES DOCUMENTS: **38/616/NP, 38/624A/RVN**	

IEC TC 38 : INSTRUMENT TRANSFORMERS	
SECRETARIAT: Italy	SECRETARY: Mr Filippo Frugoni
OF INTEREST TO THE FOLLOWING COMMITTEES: TC 13,TC 57,TC 85,SC 86C,TC 95	PROPOSED HORIZONTAL STANDARD: ☐ Other TC/SCs are requested to indicate their interest, if any, in this CD to the secretary.
FUNCTIONS CONCERNED: ☒ EMC ☐ ENVIRONMENT ☐ QUALITY ASSURANCE ☐ SAFETY	

This document is still under study and subject to change. It should not be used for reference purposes.

Recipients of this document are invited to submit, with their comments, notification of any relevant patent rights of which they are aware and to provide supporting documentation.

TITLE:

Instrument transformers - Part 8: Specific requirements for electronic Current Transformers

NOTE FROM TC/SC OFFICERS:

1

Copyright © 2021 International Electrotechnical Commission, IEC. All rights reserved. It is permitted to download this electronic file, to make a copy and to print out the content for the sole purpose of preparing National Committee positions. You may not copy or "mirror" the file or printed version of the document, or any part of it, for any other purpose without permission in writing from IEC.

Documents
Document Sharing Hub

Full document details: 24/30496146 DC

CONTENTS

FOREWORD....4
1 Scope....8
2 Normative reference....8
3 Terms and definitions....9
3.1 General terms and definitions....9
3.4 Definitions related to accuracy....10
3.7 Index of abbreviations....11
5 Ratings....11
5.5 Rated output....11
5.5.801 Rated burden (Z_{br})....11
5.6 Rated accuracy class....12
5.6.801 Measuring ECT....12
5.6.802 Protective ECT....13
5.6.803 Multipurpose ECT....14
5.801 Recommended values for rated primary current (I_{pr})....15
5.802 Standard values of rated secondary voltage (U_{sr}) for analog signal....15
5.803 Standard values for rated continuous thermal current (I_{cth})....15
5.804 Rated short-time thermal current (I_{th})....15
5.805 Rated dynamic current (I_{dyn})....15
5.806 Wake-up current (I_{wk}) and wake-up time (t_{wk})....16
5.807 Secondary voltage limit....16
5.808 Limits for the secondary voltage offset and noise....16
5.809 Test for accuracy in respect of the positioning of the primary conductor....16
5.809.1 General....16
5.809.2 Designation of accuracy class extension....17
6 Design and construction....18
6.4 Requirements for temperature rise of parts and components....18
6.4.1 General....18
6.11 Electromagnetic compatibility (EMC)....18
6.11.801 Impact of magnetic field at rated frequency from other phases....18
6.13 Markings....19
6.13.801 Terminal markings – General rules....19
6.13.802 Method of marking....19
6.13.803 Markings to be used....19
6.13.804 Rating plate markings....20
6.602 Requirement for electrical transmitting systems and electrical wires for output link....21
6.602.1 Connectors....21
6.602.2 Earthing of the output cable....21
6.603 Recommended time interval for the verification of accuracy....22
7 Tests....22
7.1 General....22
7.1.2 List of tests....22
7.2 Type tests....22
7.2.2 Temperature-rise test....22

AVA Documents
Document Sharing Hub
Full document details: 24/30496146 DC

7.2.5 Electromagnetic compatibility (EMC) tests 24
7.2.6 Test for accuracy 24
7.2.801 Short time current tests 29
7.2.802 Tests for digital output....30
7.2.803 Test for offset 30
7.2.804 Test for noise....31
7.3 Routine tests....31
7.3.1 Power-frequency voltage withstand tests on primary terminals 31
7.3.4 Power-frequency voltage withstand tests on secondary terminals 31
7.3.5 Test for accuracy 31
7.4 Special test....31
7.4.801 Frequency response of the ECT 31
601 Information to be given with enquiries, tenders and orders....32
601.1 Designation....32
Bibliography 33

Figure 801 – General block diagram of a single-phase ECT 8
Figure 801.2 – Illustration of the primary conductor position according to the position factor....18
Figure 803 – Markings of terminals....20
Figure 804 – Accuracy measurement test set up....27
Figure 805– test set up for impact of magnetic field from other phases....29

Table 801 – Limits of error 12
Table 802 – Designation of protective classes 13
Table 803 – Limits of errors for protective ECT....14
Table 10 – List of further tests besides those in Subclause 7.1.2 of IEC 61869-6:2016 22
Table 807 – Burden values for analogue output at which test for accuracy shall be made....25
Table 808 – Designation of ECT....32

Documents
Document Sharing Hub
Full document details: 24/30496146 DC

INTERNATIONAL ELECTROTECHNICAL COMMISSION

INSTRUMENT TRANSFORMERS –

Part 8: Additional requirements for electronic current transformers

FOREWORD

1) The International Electrotechnical Commission (IEC) is a worldwide organization for standardization comprising all national electrotechnical committees (IEC National Committees). The object of IEC is to promote international co-operation on all questions concerning standardization in the electrical and electronic fields. To this end and in addition to other activities, IEC publishes International Standards, Technical Specifications, Technical Reports, Publicly Available Specifications (PAS) and Guides (hereafter referred to as "IEC Publication(s)"). Their preparation is entrusted to technical committees; any IEC National Committee interested in the subject dealt with may participate in this preparatory work. International, governmental and non-governmental organizations liaising with the IEC also participate in this preparation. IEC collaborates closely with the International Organization for Standardization (ISO) in accordance with conditions determined by agreement between the two organizations.

2) The formal decisions or agreements of IEC on technical matters express, as nearly as possible, an international consensus of opinion on the relevant subjects since each technical committee has representation from all interested IEC National Committees.

3) IEC Publications have the form of recommendations for international use and are accepted by IEC National Committees in that sense. While all reasonable efforts are made to ensure that the technical content of IEC Publications is accurate, IEC cannot be held responsible for the way in which they are used or for any misinterpretation by any end user.

4) In order to promote international uniformity, IEC National Committees undertake to apply IEC Publications transparently to the maximum extent possible in their national and regional publications. Any divergence between any IEC Publication and the corresponding national or regional publication shall be clearly indicated in the latter.

5) IEC itself does not provide any attestation of conformity. Independent certification bodies provide conformity assessment services and, in some areas, access to IEC marks of conformity. IEC is not responsible for any services carried out by independent certification bodies.

6) All users should ensure that they have the latest edition of this publication.

7) No liability shall attach to IEC or its directors, employees, servants or agents including individual experts and members of its technical committees and IEC National Committees for any personal injury, property damage or other damage of any nature whatsoever, whether direct or indirect, or for costs (including legal fees) and expenses arising out of the publication, use of, or reliance upon, this IEC Publication or any other IEC Publications.

8) Attention is drawn to the Normative references cited in this publication. Use of the referenced publications is indispensable for the correct application of this publication.

9) Attention is drawn to the possibility that some of the elements of this IEC Publication may be the subject of patent rights. IEC shall not be held responsible for identifying any or all such patent rights.

International Standard IEC 61869-8 has been prepared by IEC technical committee 38: Instrument transformers.

This first edition of IEC 61869-8 cancels and replaces the IEC 60044-8, published in 2002[1].

[1] IEC 60044-7 and IEC 60044-8 will eventually be replaced by the IEC 61869 series, but until all the relevant parts will be published, these two standards are still in force.

AVA Documents Document Sharing Hub

Full document details: 24/30496146 DC

The text of this standard is based on the following documents:

FDIS	Report on voting
38/XXX/FDIS	38/XXX/RVD

Full information on the voting for the approval of this standard can be found in the report on voting indicated in the above table.

This publication has been drafted in accordance with the ISO/IEC Directives, Part 2.

A list of all parts in the IEC 61869 series, published under the general title *Instrument transformers*, can be found on the IEC website.

This Part 8 is to be read in conjunction with, and is based on, IEC 61869-1:2007, *Part 1: General Requirements*, and IEC 61869-6:2016, *Instrument transformers – Part 6: Additional general requirements for low-power instrument transformers*. However, the reader is encouraged to use its most recent edition.

This Part 8 follows the structure of IEC 61869-1:2007 and of IEC 61869-6:2016 and supplements or modifies its corresponding clauses.

When a particular clause/subclause of Part 1 and Part 6 is not mentioned in this Part 8, that clause/subclause applies. When this standard states “addition”, “modification” or “replacement”, the relevant text in Part 1 and Part 6 is to be adapted accordingly.

For additional clauses, subclauses, figures, tables, annexes or notes, the following numbering system is used:

– clauses, subclauses, tables, figures and notes that are numbered starting from 801 are additional to those in Part 1 and Part 6;
– additional annexes are lettered 8A, 8B, etc.

An overview of the planned set of standards at the date of publication of this document is given below. The updated list of standards issued by IEC TC 38 is available at the website: www.iec.ch.

Documents
Document Sharing Hub

Full document details: 24/30496146 DC

PRODUCT FAMILY STANDARDS		PRODUCT STANDARD IEC	PRODUCTS	OLD STANDARD IEC
IEC 61869-1 GENERAL REQUIREMENTS FOR INSTRUMENT TRANSFORMERS		**61869-2**	ADDITIONAL REQUIREMENTS FOR CURRENT TRANSFORMERS	60044-1 60044-6
		61869-3	ADDITIONAL REQUIREMENTS FOR INDUCTIVE VOLTAGE TRANSFORMERS	60044-2
		61869-4	ADDITIONAL REQUIREMENTS FOR COMBINED TRANSFORMERS	60044-3
		61869-5	ADDITIONAL REQUIREMENTS FOR CAPACITOR VOLTAGE TRANSFORMERS	60044-5
	IEC 61869-6 ADDITIONAL GENERAL REQUIREMENTS FOR LOW-POWER INSTRUMENT TRANSFORMERS	**61869-7**	ADDITIONAL REQUIREMENTS FOR ELECTRONIC VOLTAGE TRANSFORMERS	60044-7
		61869-8	ADDITIONAL REQUIREMENTS FOR ELECTRONIC CURRENT TRANSFORMERS	60044-8
		61869-9	DIGITAL INTERFACE FOR INSTRUMENT TRANSFORMERS	
		61869-10	ADDITIONAL REQUIREMENTS FOR LOW-POWER PASSIVE CURRENT TRANSFORMERS	
		61869-11	ADDITIONAL REQUIREMENTS FOR LOW-POWER PASSIVE VOLTAGE TRANSFORMERS	60044-7
		61869-12	ADDITIONAL REQUIREMENTS FOR COMBINED ELECTRONIC INSTRUMENT TRANSFORMER OR COMBINED PASSIVE TRANSFORMERS	
		61869-13	STAND ALONE MERGING UNIT	
		61869-14	ADDITIONAL REQUIREMENTS FOR CURRENT TRANSFORMERS FOR DC APPLICATIONS	
		61869-15	ADDITIONAL REQUIREMENTS FOR DC VOLTAGE TRANSFORMERS FOR DC APPLICATIONS	

Documents
Document Sharing Hub
Full document details: 24/30496146 DC

The committee has decided that the contents of this publication will remain unchanged until the stability date indicated on the IEC web site under "http://webstore.iec.ch" in the data related to the specific publication. At this date, the publication will be

- reconfirmed,
- withdrawn,
- replaced by a revised edition, or
- amended.

A bilingual version of this publication may be issued at a later date.

IMPORTANT – The 'colour inside' logo on the cover page of this publication indicates that it contains colours which are considered to be useful for the correct understanding of its contents. Users should therefore print this document using a colour printer.

Documents
Document Sharing Hub

Full document details: 24/30496146 DC

INSTRUMENT TRANSFORMERS –

Part 8: Additional requirements for electronic current transformers

1 Scope

This part of IEC 61869 is a product standard and covers additional requirements for electronic current transformers (ECT) used for AC applications having rated frequencies from 15 Hz to 400 Hz and system voltage above 1 kV. The product standard for ECT is composed by the IEC 61869-1:2007, in addition with IEC 61869-6:20126, and this standard with specific requirements.

The ECT may include any arrangement of electrical, optical, magnetic technologies provided it contains electronic devices.

Note: CT including passive overvoltage protective devices are not considered to be ECT.

For analogue secondary signal, this standard specifies rated secondary voltage.

For digital secondary signal, this standard refers to IEC 61969-9.

The general block diagram of single-phase ECT is given in Figure 801. According to the technology, it is not necessary that all parts described in Figure 801 are included in the ECT.

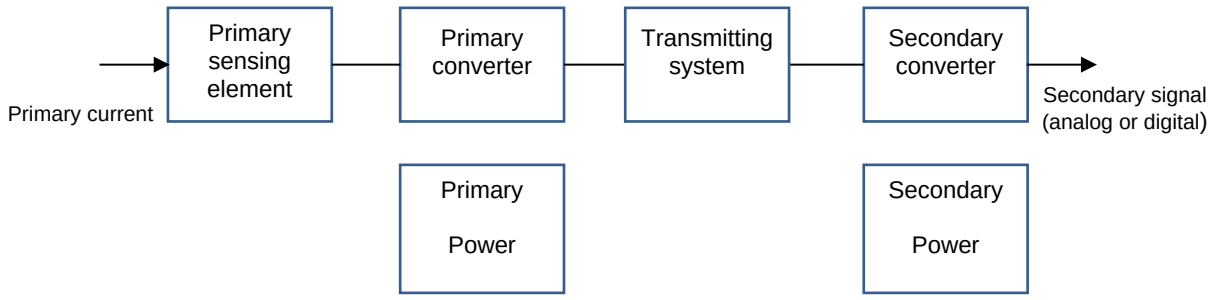

Figure 801 – General block diagram of a single-phase ECT

2 Normative reference

The following documents, in whole or in part, are normatively referenced in this document and are indispensable for its application. For dated references, only the edition cited applies. For undated references, the latest edition of the referenced document (including any amendments) applies.

IEC 61869-1:2007, *Instrument transformers – Part 1: General requirements*

IEC 61869-2 Ed. 1.0 b:2012, Instrument Transformers - Part 2: Additional requirements for current transformers

IEC 61869-6:2016, *Instrument transformers – Part 6: Additional general requirements for low-power instrument transformers*

Documents
Document Sharing Hub
Full document details: 24/30496146 DC

IEC 61869-9:2016, *Instrument transformers – Part 9: Digital interface for instrument transformers*

IEC 61000-4-17 Ed. 1.2 b:2009, Electromagnetic Compatibility (EMC) - Part 4-17: Testing and measurement techniques - ripple on d.c. Input power port immunity test

IEC 60059 Ed. 2.1 b:2009, IEC Standard Current Ratings

3 Terms and definitions

For the purposes of this document, the terms and definitions from IEC 61869-1:2007 and IEC 61869-6:2016 apply, with the following modifications and additions.

3.1 General terms and definitions

3.1.607
electronic IT
EIT
LPIT in which signal processing is performed by active electronic components

3.1.801
electronic current transformer
ECT
EIT for current measurements

3.1.802
bushing type ECT
electronic current transformer without primary conductor and primary insulation of its own which can be fitted directly over an insulated bushing or conductor

Note to entry: Bushing type ECT is a generic definition that includes the cable type current transformer as defined in IEV 321-02-04.

[SOURCE: IEV 321-02-02:1986]

3.1.803

step response time
duration between the instant when the measurand (or quantity supplied) is subjected to a specified abrupt change and the instant when the indication (or quantity supplied) reaches, and remains within specified limits of, its final steady-state value.

[SOURCE: IEV 311-06-04]

3.1.627
wake-up current
I_{wk}
In case of ECT with source of power given by the primary current, the wake-up current is the minimum primary current which assure a full operation of the ECT.

3.1.628
wake-up time
t_{wk}
In case of ECT with source of power given by the primary current, the wake-up time is the time occurrence between the instant the current starts passing through the primary terminals and the time in which the ECT reaches a full operation.

Documents
Document Sharing Hub
Full document details: 24/30496146 DC