Draft for Public Comment

Form 36

DPC: 25/30496373 DC

BSI Group Headquarters

389 Chiswick High Road London W4 4AL

Tel: +44 (0)20 8996 9000
Fax: +44 (0)20 8996 7400
www.bsigroup.com

Date: 20 March 2025
Origin: European

Latest date for receipt of comments: 13 May 2025

Project No. 2024/02009

Responsible committee: EH/2/3 Ambient atmospheres

Interested committees:

Title: Draft BS EN 18168 BS Ambient air - Biomonitoring with higher plants - Method of the standardised grass exposure.

Please notify the secretary if you are aware of any keywords that might assist in classifying or identifying the standard or if the content of this standard

i) has any issues related to 3rd party IPR, patent or copyright
ii) affects other national standard(s)
iii) requires additional national guidance or information

WARNING: THIS IS A DRAFT AND MUST NOT BE REGARDED OR USED AS A BRITISH STANDARD. THIS DRAFT IS NOT CURRENT BEYOND 13 May 2025

This draft is issued to allow comments from interested parties; all comments will be given consideration prior to publication. No acknowledgement will normally be sent. **See overleaf for information on the submission of comments.**

No copying is allowed, in any form, without prior written permission from BSI except as permitted under the Copyright, Designs and Patent Act 1988 or for circulation within a nominating organization for briefing purposes. Electronic circulation is limited to dissemination by e-mail within such an organization by committee members.

Further copies of this draft may be purchased from BSI Shop http://shop.bsigroup.com or from BSI Customer Services, Tel: +44(0) 20 8996 9001 or email cservices@bsigroup.com. British, International and foreign standards are also available from BSI Customer Services.

Information on the co-operating organizations represented on the committees referenced above may be obtained from https://standardsdevelopment.bsigroup.com/.

Responsible Committee Secretary: Ms Joanna Macnamara (BSI)
Direct tel: 020 8996 7565
E-mail: joanna.macnamara@bsigroup.com

Documents
Document Sharing Hub
Full document details: 25/30496373 DC

Introduction

This draft standard is based on national and international discussions. Your comments on this draft are invited and will assist in the preparation of the consequent standard.

For international standards, comments will be reviewed by the relevant UK national committee before sending the consensus UK vote and comments to the international committee, which will then decide appropriate action. If the international standard is approved, it is usual for the text to be published as a British Standard.

For national standards, comments will be reviewed by the relevant UK national committee and the resulting standards published as a British Standard.

UK Vote

Please indicate whether you consider the UK should submit a negative (with supporting technical reasons) or positive vote on this draft. Please indicate if you are aware of any reason why this draft standard should not be published as a British Standard.

Submission of Comments

- **Annotated drafts are not acceptable and will be rejected.**
- All comments should be submitted online at **https://standardsdevelopment.bsigroup.com/**. You will need to register in order to comment.

Template for comments and secretariat observations

Date: xx/xx/20xx	Document: ISO/DIS xxxx

1	2	(3)	4	5	(6)	7
MB	Clause No./ Subclause No./Annex **(e.g. 3.1)**	Paragraph/ Figure/Table/Note	**Type of comment**	**Commend (justification for change) by the MB**	**Proposed change by the MB**	**Secretariat observations on each comment submitted**
	3.1	Definition 1	ed	Definition is ambiguous and needs clarifying.	Amend to read '...so that the mains connector to which no connection...'	
	6.4	Paragraph 2	te	The use of the UV photometer as an alternative cannot be supported as serious problems have been encountered in its use in the UK.	Delete reference to UV photometer.	

Documents
Document Sharing Hub

Full document details: 25/30496373 DC

EUROPEAN STANDARD

NORME EUROPÉENNE

EUROPÄISCHE NORM

DRAFT
prEN 18168

March 2025

ICS 13.040.20

English Version

Ambient air - Biomonitoring with higher plants - Method of the standardised grass exposure

Air ambiant - Biosurveillance à l'aide de plantes supérieures - Méthode de l'exposition normalisée de ray-grass

Außenluft - Biomonitoring mit Höheren Pflanzen - Verfahren der standardisierten Graskultur

This draft European Standard is submitted to CEN members for enquiry. It has been drawn up by the Technical Committee CEN/TC 264.

If this draft becomes a European Standard, CEN members are bound to comply with the CEN/CENELEC Internal Regulations which stipulate the conditions for giving this European Standard the status of a national standard without any alteration.

This draft European Standard was established by CEN in three official versions (English, French, German). A version in any other language made by translation under the responsibility of a CEN member into its own language and notified to the CEN-CENELEC Management Centre has the same status as the official versions.

CEN members are the national standards bodies of Austria, Belgium, Bulgaria, Croatia, Cyprus, Czech Republic, Denmark, Estonia, Finland, France, Germany, Greece, Hungary, Iceland, Ireland, Italy, Latvia, Lithuania, Luxembourg, Malta, Netherlands, Norway, Poland, Portugal, Republic of North Macedonia, Romania, Serbia, Slovakia, Slovenia, Spain, Sweden, Switzerland, Türkiye and United Kingdom.

Recipients of this draft are invited to submit, with their comments, notification of any relevant patent rights of which they are aware and to provide supporting documentation.

Warning : This document is not a European Standard. It is distributed for review and comments. It is subject to change without notice and shall not be referred to as a European Standard.

EUROPEAN COMMITTEE FOR STANDARDIZATION
COMITÉ EUROPÉEN DE NORMALISATION
EUROPÄISCHES KOMITEE FÜR NORMUNG

CEN-CENELEC Management Centre: Rue de la Science 23, B-1040 Brussels

© 2025 CEN All rights of exploitation in any form and by any means reserved worldwide for CEN national Members.

Ref. No. prEN 18168:2025 E

Documents
Document Sharing Hub

Full document details: 25/30496373 DC

Contents

Page

European foreword 4
Introduction 5
1 Scope 7
2 Normative references 7
3 Terms and definitions 8
4 Principle of the method 9
5 Test methods 10
5.1 Material 10
5.1.1 Grass species and cultivar 10
5.1.2 Substrate 10
5.1.3 Fertiliser solution 11
5.1.4 Water 11
5.1.5 Exposure device 11
5.2 Cultivation 12
5.3 Exposure 14
5.4 Exposure location 14
5.5 Exposure duration 15
6 Sampling and handling of samples 15
6.1 General 15
6.2 Sampling 15
6.3 Transport 16
6.4 Preparation of the samples 16
6.5 Storage 16
7 Documentation 16
8 Data handling and data reporting 17
8.1 Performance characteristics 17
8.2 Study design and data handling/reporting in dependence on the required explanatory power of the study 17
9 Quality control and quality assurance 17
9.1 Control of the plant material 17
9.2 Requirements for the exposure locations 17
9.3 Requirements for the sample quantity 17
9.4 Analytical requirements 17
10 Presentation of measured data 18
11 Assessment 18
11.1 General 18
11.2 Reference values for comparison 18
11.3 Threshold values 18
Annex A (informative) Recommended upper limits for element concentrations in substrate 20
Annex B (informative) Examples of exposure devices 22

Documents
Document Sharing Hub

Full document details: 25/30496373 DC

Annex C (informative) Plates: cultivation and sampling 26
Annex D (informative) Sample preparation (before analysis) 27
Annex E (informative) Examples of protocols for documentation 28
Annex F (informative) Study design, data analysis and interpretation 30
Annex G (informative) Reference data 35
Bibliography 40

Documents
Document Sharing Hub
Full document details: 25/30496373 DC

European foreword

This document (prEN 18168:2025) has been prepared by Technical Committee CEN/TC 264 “Air Quality”, the secretariat of which is held by DIN.

This document is currently submitted to the CEN Enquiry.

Documents
Document Sharing Hub
Full document details: 25/30496373 DC

Introduction

The impact of air pollution is of growing importance worldwide. Local and regional assessment is necessary as a first step to collect fundamental information, which can be used to avoid, prevent, and minimize harmful effects on human health and the environment as a whole. Biomonitoring can serve as a tool for such a purpose. As the effects on indicator organisms are a time-integrated result of complex influences combining both air quality and local climatic conditions, this holistic biological approach is considered particularly close to human and environmental health end points and thus is relevant to air quality management.

It is important to emphasize that biomonitoring data are completely different from those obtained through physico-chemical measurements (ambient concentrations and deposition) and computer modelling (emissions data). Biomonitoring provides evidence of the effects that airborne pollutants have on organisms. As such it reveals biologically relevant, field-based, time- and space-integrated indications of environmental health as a whole. Legislation states that there should be no harmful environmental effects from air pollution. Only by investigating the effects at the biological level can this requirement be met. The application of biomonitoring in air quality and environmental management requires rigorous standards and a recognized regime so that it can be evaluated in the same way as physico-chemical measurements and modelling in pollution management.

Biomonitoring is the traditional way through which environmental changes have been detected historically. Various standard works on biomonitoring provide an overview of the state of the science at the time, e.g. [1; 2; 3]. The first investigations of passive biomonitoring are documented in the middle of the 19th century: By monitoring the development of epiphytic lichens it was discovered that the lichens were damaged during the polluted period in winter and recovered and showed strong growth in summer [4]. These observations identified lichens as important bioindicators. Later investigations also dealt with bioaccumulators. An active biomonitoring procedure with bush beans was first initiated in 1899 [5].

Biomonitoring and EU-legislation

Biomonitoring methods in terrestrial environments respond to a variety of requirements and objectives of EU environmental policy primarily in the fields of air quality (Directive 2008/50/EC on ambient air, [6]), integrated pollution prevention and control (IPPC; Directive 2010/75/EU, [7]) and conservation (92/43/EEC on the Conservation of Natural Habitats and of Wild Fauna and Flora, [8]). The topics food chain [9] and animal feed [10; 11; 12] are alluded to as well.

For air quality in Europe, the legislator requires adequate monitoring of air quality, including pollution deposition as well as avoidance, prevention, or reduction of harmful effects. Biomonitoring methods appertain to the scope of short-term and long-term air quality assessment.

Directive 2004/107/EC of 15 December 2004 relating to arsenic, cadmium, mercury, nickel, and polycyclic aromatic hydrocarbons in ambient air [13] states that “the use of bio indicators may be considered where regional patterns of the impact on ecosystems are to be assessed”.

Concerning IPPC from industrial installations, the permit procedure includes two particular environmental conditions for setting adequate emission limit values. The asserted concepts of “effects” and “sensitivity of the local environment” open a broad field for biomonitoring methods, in relation to the general impact on air quality and the deposition of operational-specific pollutants. The basic properties of biomonitoring methods can be used advantageously for various applications such as reference inventories prior to the start of a new installation, the mapping of the potential pollution reception areas and (long-term) monitoring of the impact caused by industrial activity. The environmental inspection of installations demands the examination of the full range of environmental effects. For the public authority, biomonitoring data contribute to the decision-making process, e.g. concerning the question of tolerance of impacts at the local scale.

The Habitats Directive [8] requires competent authorities to consider or review planning permission and other activities affecting a site designated at the European level where the integrity of the site could be

Documents
Document Sharing Hub
Full document details: 25/30496373 DC

adversely affected. The Directive also provides for the control of potentially damaging operations, whereby consent may only be granted once it has been shown through appropriate assessment that the proposed operation will not adversely affect the integrity of the site. The responsibility lies with the applicant to demonstrate that there is no adverse effect on such a conservation area. For this purpose, biomonitoring is well suited as a non-intrusive form of environmental assessment.

As an important element within its integrated environmental policy, in 2003 the European Commission adopted a European Environment and Health Strategy [14] with the overall aim of reducing diseases caused by environmental factors in Europe. In chapter 5 of this document, it is stated that the "community approach entails the collection and linking of data on environmental pollutants in all the different environmental compartments (including the cycle of pollutants) and in the whole ecosystem (bio-indicators) to health data (epidemiological, toxicological, morbidity)". The European Environment and Health Action Plan 2004-2010 [15] which followed the adoption of this strategy focuses on human biomonitoring, but emphasizes the need to "develop integrated monitoring of the environment, including food, to allow the determination of relevant human exposure".

Development of the standardized grass culture

The method of standardized grass cultures can be used to detect air pollution induced accumulation of inorganic and organic substances in plants. It allows for the determination of the temporal and spatial distribution of pollution and the assessment of risks to plants, animals, and humans. This document standardises the method and minimizes confounding impacts of factors which affect the uptake of pollutants into the standardized grass cultures.

The methodology was originally developed in the Ruhr area in Germany in the late 1960s [16; 17] to determine the burden of fluorides, lead, cadmium, and zinc pollution in a heavily industrialized and densely populated region. In 1978, VDI 3792-1 [18] was published which described the cultivation of grass cultures and the standardized set up of plant containers in the field. In 1982 and 1985 additional VDI standards on the determination of fluorides and lead concentrations in grass cultures followed [19; 20]. In 2003, the standard series on grass culture was completely revised and consolidated in VDI 3957-2 (current version see [21]). The current version also includes persistent organic and inorganic compounds.

Meanwhile, the feasibility of the original method has been tested and approved in eight European countries within the European network for the assessment of air quality by the use of bioindicator plants [22]. The results of this EU project confirm that the method can be applied across large climatic gradients and that it is well suited for comparison of air pollution effects in different countries [23]. Based on these experiences, the grass culture method has also been adopted as a standard in France [24]. The present document is primarily based on the above-mentioned national standards and it has been jointly edited by experts from seven European countries.

Documents
Document Sharing Hub

Full document details: 25/30496373 DC

1 Scope

This document applies to the use of the grass *Lolium multiflorum* ssp. italicum designated hereafter as Italian ryegrass for the bioaccumulation of substances liable to cause atmospheric pollution. It is an active biomonitoring approach insofar as the plants used are first cultivated in set conditions before being exposed at the monitoring locations in the field. The plants then record any pollution events that occur while they are being exposed, allowing such events to be accurately dated.

The method described in this document can be applied for identification and localization of one or more single pollution sources and the tracking of their "plume" on a local or regional scale. It also offers a tool to monitor sites in the long term by the repeated application of a clearly defined procedure and to describe the local or regional air pollution situation.

The method applies to solid and gaseous substances deposited on plants, where they may accumulate on their surface or in their tissues. These substances include sulphur, chloride, fluoride and especially metals as well as low volatile organic and halo-organic compounds such as polycyclic aromatic hydrocarbons (PAH), polychlorinated biphenyls (PCB), polybrominated diphenyl ethers (PBDE), polychlorinated dibenzo dioxins (PCDD) and polychlorinated dibenzo furans (PCDF). It is as well possible to verify pesticides which are used in plant protection products. The range of potential substances may be expanded according to the task at hand and the capabilities of conducting trace analyses and assessment.

The method described in this document allows spatial and temporal comparisons and allows for screening, thus providing a first indication of risk. The results of grass culture studies can suggest risks to biota (e.g. via the food chain) which require further investigation.

The method described in this document does not replace physico-chemical methods of direct measurement or modelling of air pollutants and cannot be replaced by them for its part; it complements them by indicating biological effects.

Potential areas of deployment are:

- Permit procedures related to air pollution legislation;
- Preservation of evidence related to the code for protection from pollution;
- Monitoring of emission sources and performance control;
- Assessment of local-scale emission transport;
- Evidence of causation, e.g. related to environmental liability;
- Air quality maintenance plans/strategies;
- Long-term monitoring of ecological effects of atmospheric depositions;
- Detection and assessment of local, regional, and countrywide effects of atmospheric depositions;
- Assessment of risks for humans and/or animals via the food chain.

This document is of interest to those involved in environmental monitoring.

2 Normative references

There are no normative references in this document.

Documents
Document Sharing Hub
Full document details: 25/30496373 DC

3 Terms and definitions

For the purposes of this document, the following terms and definitions apply.

ISO and IEC maintain terminological databases for use in standardization at the following addresses:

- IEC Electropedia: available at https://www.electropedia.org/
- ISO Online browsing platform: available at https://www.iso.org/obp

3.1
biomonitoring
use of biological systems (organisms and organism communities) to monitor environmental change over space and/or time

Note 1 to entry: Biological systems can be further considered as bioindicators.

Note 2 to entry: Active biomonitoring refers to deliberate field exposure following a standardized methodology; passive biomonitoring refers to *in situ*-sampling and/or observation of selected bioindicators currently or previously present in the environment.

[SOURCE: EN 16789:2016 [25], definition 2.1]

3.2
bioindicator
organism or a part of it or an organism community (biocoenosis) which documents environmental impacts

Note 1 to entry: It encompasses bioaccumulators and response indicators.

[SOURCE: EN 16789:2016 [25], definition 2.2]

3.3
bioaccumulator
organism which can indicate environmental conditions and their modification by accumulating substances present in the environment (air, water, or soil) at the surface and/or internally

[SOURCE: EN 16789:2016 [25], definition 2.3]

3.4
response indicator (or effect indicator)
organism which can indicate environmental conditions and their modification by either showing specific symptoms (molecular, biochemical, cellular, physiological, anatomical, or morphological) or by its presence/absence in the ecosystem

[SOURCE: EN 16789:2016 [25], definition 2.4]

3.5
blank sample
sample of grass taken from pots prior to the exposure in the field

3.6
greenhouse control
sample of grass kept in the greenhouse, taken from pots at the end of each exposure phase

Documents
Document Sharing Hub
Full document details: 25/30496373 DC

3.7
background level
concentration of a substance in samples exposed and/or collected in a part of the study area, where no emission source has a local influence

Note 1 to entry: To help characterize the background deposition either measured or modelled data can be used.

Note 2 to entry: Emission sources might be industry, households, agriculture, or transport.

3.8
effect
response of organisms or a set of organisms (biocoenosis) to physical and chemical conditions of the environment

Note 1 to entry: That includes changes in the chemical composition of the bioindicator.

3.9
study area
geographical area considered by the study

Note 1 to entry: It shall be described in detail in terms of extent, land use classification and altitudinal range.

[SOURCE: EN 16789:2016 [25], definition 2.7]

4 Principle of the method

Standardized grass cultures are cultures of Italian ryegrass in plant pots, which are exposed to ambient air in an investigation area, and which can accumulate chemical compounds from the atmosphere. Each culture is exposed for a certain period and is subsequently analysed for deposited substance accumulation. In each study period or growing season several grass cultures are sequentially exposed at each location so that the temporal sequence of the pollution load can be determined, and the results can be verified statistically. The ability of grass cultures to accumulate inorganic and organic pollutants (e.g. heavy metals, fluorides, polycyclic aromatic hydrocarbons, and dioxins) was proven in numerous studies [24; 26; 27; 28; 29; 30; 31; 32; 33; 34; 35].

As grass cultures grow their leaf surface area and biomass will change. In addition, varying climatic conditions can affect growth and surface properties. These influence their ability to accumulate substances from the air, while the concentration of absorbed compounds is diluted by the growth. There are also processes by which substances are removed (e.g. abrasion, volatilisation). The proximity of a pollution event to the sampling date will have an important influence on the concentration recorded in the plant material, thus an event occurring just before harvest will produce a stronger signal than the one occurring just after the start of exposure. Through repeated exposure of grass cultures on one location it is possible to get temporally integrated information on the pollution effects over the course of a study period.

The use of grass cultures in active monitoring has the following advantages over passive monitoring using plants growing *in situ*:

- it is easier to identify pollutant accumulation in grass cultures than in plants growing *in situ*, because the initial concentrations at the start of exposure are known;
- because of the standardization, grass cultures are at the same stage of development and have the same conditions (genetic composition, soil, nutrient and water supply) at all locations; therefore, results from different locations can be compared optimally;

Documents
Document Sharing Hub
Full document details: 25/30496373 DC

- a possible pollution effect can be assigned to a certain time period accurately;
- the monitoring locations can be chosen freely;
- due to the higher accumulation potential of the grass culture compared to grassland vegetation, the standardized grass culture is an early-warning indicator.

The use of grass cultures as biomonitors depends critically on whether they represent accumulations in other plants. In the case of various heavy metals and fluorides a very close positive correlation has been found between pollution-induced accumulation in grass cultures and plants growing *in situ* (e.g. vegetables) [36; 37; 38; 39]. The ratio will vary according to the situation and the vegetation type but increased concentrations in the grass culture can indicate a potential risk.

In contrast to physico-chemical measurements of pollution concentrations or deposition rates, standardized grass cultures as representatives of the protected resource vegetation detect the portion of air pollutants absorbed or adsorbed by the plants. This makes the effect caused by pollutants directly assessable. In addition, there are lipophilic organic substances that can accumulate in the plant but are much more difficult to measure using physico-chemical methods such as bulk samplers. Just as for the vegetation at a location, the portion of pollutants causing an effect depends strongly, amongst others, on weather conditions, which are not reflected in physico-chemical measurements. Therefore, there is usually no direct relationship to results from measurements of pollution concentrations and deposition rates [40; 41; 42; 43].

5 Test methods

5.1 Material

5.1.1 Grass species and cultivar

Italian ryegrass (*Lolium multiflorum* Lam. ssp. *italicum*) shall be used for the method described. For the choice of a specific cultivar, the following prerequisites shall be fulfilled:

- adapted to the local climate situation;
- admitted in the respective country;
- suitable biomass, but not fast-growing;
- short-growing.

Once a cultivar has been chosen, it shall be used continuously to ensure comparability.

Examples of cultivars tested and regularly used:

- in Austria: cultivar “Gemini”;
- in France: cultivar “Bio Mowestra”;
- in Germany: cultivars “Balance” and “Gemini”.

For annual exposure periods, the grass seeds shall be from a single batch of the same origin or brand.

5.1.2 Substrate

Care should be taken to use a standardized soil mixture as substrate for the grass cultures which is available in a large area (e.g. nationally) so that the same substrate can be used in other programmes. It

Documents
Document Sharing Hub
Full document details: 25/30496373 DC

is important that the substrate is unfertilised. Attention should also be paid to the pH value, which should range between 5.5 and 7.

Within one study project, a homogeneous substrate (if necessary, by mixing substrate from different suppliers) should be used for one growing period. Before starting the cultivation, a representative sample of the substrate should be analysed for contents of elements and can be compared to the recommended thresholds in Annex A.

5.1.3 Fertiliser solution

To provide fertiliser for the grass cultures a solution of laboratory chemicals (analytical or at least technical grade) is used. It shall be ensured that no heavy metals in readily available form are introduced into the substrate. The fertiliser solution contains 5,8 g KH_2PO_4, 8,5 g KNO_3 and 5,3 g NH_4NO_3 per litre deionised water.

5.1.4 Water

For watering the plants, drinking water quality is sufficient. If drinking water quality cannot be complied with, deionised water shall be used.

NOTE Directive (EU) 2020/2184 [44] relates to the quality of drinking water.

5.1.5 Exposure device

The exposure device consists of the following parts:

- plant pot (Figure 1), commercial version, volume 1 l to 2 l, diameter of substrate surface (2 cm below pot rim) 12 ± 1 cm, provided with at least four drillings for at least two wicks or blotting strips; pot height at least 10 cm (at least 8 cm below substrate surface); material: polypropylene or polyethylene especially when inorganic compounds are analysed.

NOTE 1 Plastic pots made of other materials than the ones mentioned can interfere with the study results due to high concentrations of heavy metals.

- two wicks made of textile band made of polyester fibre (thickness 0,4 mm; width to be cut at about 30 mm) or glass fibre (Ø 6 mm or 8 mm; to be handled only when wet)

- weather-proof, opaque water reservoir, of sufficient volume; the material used shall not leak substances that influence the results

NOTE 2 An outer layer can be necessary for the water reservoir to protect it from external influences, especially extreme weather such as prolonged direct sunlight. For example, a reflecting coating can be helpful to avoid overheating.

One should be aware that mosquitos might use the water reservoir as habitat for reproduction. In this case, biological control should be applied, e.g. *Bacillus thuringiensis*.

NOTE 3 Regarding biological control methods, local or national regulations can apply.

Documents
Document Sharing Hub
Full document details: 25/30496373 DC

Dimensions in centimetres

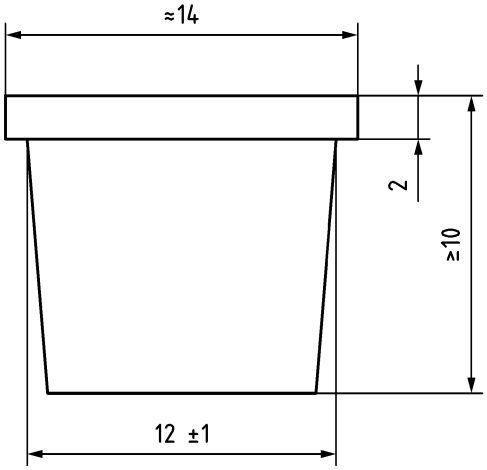

Figure 1 — Plant pot

Before beginning a project, the material of the suction wicks shall be tested whether substances leak from them that might impair the results of the exposure.

The plant pots are put into water reservoirs (see Annex B). The water is supplied to the plant by wicks, which hang from the plant pots into the water reservoir. The shape of the water reservoir is of no importance to the results of the grass cultures, but its height should not exceed 50 cm as otherwise the absorption capacity of the wicks will not suffice. The smaller the volume, the more refilling might be necessary depending on the weather conditions.

5.2 Cultivation

Aim of the cultivation is a healthy, densely grown grass culture. The grass culture is cultivated in the pots used later for exposure in a greenhouse with as little influence of pollutants as possible. The temperature requirements of Italian ryegrass are low [45], but it shall be ensured that the temperature in the greenhouse is not ≤ 12°C during daytime. The development of grass cultures ready for exposure takes about six weeks. Depending on the geographical location, the greenhouse can remain unheated, i.e. it can be run as a cold house or open greenhouse. During cultivation the following procedures have turned out to be effective (see Annex C for additional information).

Sowing and cultivation are carried out in the following steps:

- The entire amount of soil needed for a series of grass cultures has to be brought together and homogenized by mixing thoroughly before it is distributed into the plant pots (if necessary, it can be moistened so it mixes easily).
- For each exposure period, the substrate volume is collected and if necessary moistened (optimal water content: 45 % to 55 %) and the pH is controlled (optimal pH value: 5.5 to 7).
- About 10 % more grass cultures than needed for the exposure should be cultivated so that weakly growing cultures can be replaced and to ensure the homogeneity of the cultivation batch.
- Before filling the plant pots with soil, the ends of two well-moistened wicks are put through the holes in the bottom so that their middle is inside the pot and they run parallel. The length of the wicks is such that their ends reach the bottom of the water reservoir.
- The pots are filled up to the top rim loosely with substrate; the wicks are held so that their middle is situated in the substrate at approx. 2/3 of the pot height. It is important that the substrate quantities

Documents
Document Sharing Hub
Full document details: 25/30496373 DC