Wrinkle Recovery of Fabrics: Appearance Method

Developed in 1968 by AATCC Committee RR6; jurisdiction transferred in 1995 to AATCC Committee RA61; reaffirmed and editorially revised 1969, 1985, 1994, 2004, 2009; revised 1970, 1974, 2017; reaffirmed 1977, 1980, 1989, 1999, 2013; editorially revised 1988, 1990, 1992, 1995, 2010, 2016. Technically equivalent to ISO 9867.

1. Purpose and Scope

1.1 This test method is for determining the appearance of textile fabrics after induced wrinkling. It is applicable to fabrics made from any fiber or combination of fibers.

1.2 The method can be used to evaluate fabrics at their original, unwashed state or after home laundering.

2. Principle

2.1 A test specimen is wrinkled under standard atmospheric conditions in a standard wrinkling device under a predetermined load for a prescribed period of time. The specimen is then reconditioned in the standard atmosphere for textile testing and evaluated for appearance by comparison with 3-dimensional reference standards.

3. Terminology

3.1 **smoothness appearance,** n.—*in fabrics*, the visual impression of planarity of a specimen quantified by comparison with a set of reference standards.

3.2 **wrinkle recovery,** n.—that property of a fabric which enables it to recover from folding deformations.

4. Safety Precautions

NOTE: These safety precautions are for information purposes only. The precautions are ancillary to the testing procedures and are not intended to be all inclusive. It is the user's responsibility to use safe and proper techniques in handling materials in this test method. Manufacturers MUST be consulted for specific details such as material safety data sheets and other manufacturer's recommendations. All OSHA standards and rules must also be consulted and followed.

4.1 Good laboratory practices should be followed. Wear safety glasses in all laboratory areas.

5. Apparatus and Materials

5.1 AATCC Wrinkle Tester (see Fig. 1, and 11.1 and 11.2).

Fig. 1—AATCC Wrinkle Tester.

5.2 AATCC 3-Dimensional Wrinkle Recovery Replicas (see Fig. 2 and 11.3).

5.3 Standard conditions room at 21 ± 2°C (70 ± 4°F) and 65 ± 5% RH.

5.4 Clothes hangers with clips.

5.5 A lighting and evaluation area in a darkened room using overhead lighting arrangement shown in Fig. 3.

5.6 Digital Imaging System (see 11.8).

6. Test Specimens

6.1 Take three test specimens from the fabric to be tested by cutting each 15 × 28 cm (6 × 11 in.) with the long dimension running in the direction of the warp of woven fabric or the wale of knit fabrics (see 11.4). Identify each specimen along one edge of the face side.

6.2 Condition specimens for a minimum of 8 h at 21 ± 2°C (70 ± 4°F) and 65 ± 5% RH.

7. Procedure

7.1 Perform all further steps at 21 ± 2°C (70 ± 4°F) and 65 ± 5% RH.

7.2 Raise top flange of wrinkle tester and hold in top position with locking pin.

7.3 Wrap one long edge (28 cm) (11 in.) of the specimen around the top flange of the AATCC Wrinkle Tester with the face side of the specimen on the outside and clamp it in position using the steel spring and clamp provided. Arrange the ends of the specimen so that they are opposite the opening in the spring clamp.

7.4 Wrap the opposite long edge of the specimen around the bottom flange and clamp as described above.

7.5 Adjust the specimen by pulling on its bottom edge, so that it lies smooth without sagging between the top and the bottom flanges.

7.6 Withdraw the locking pin and

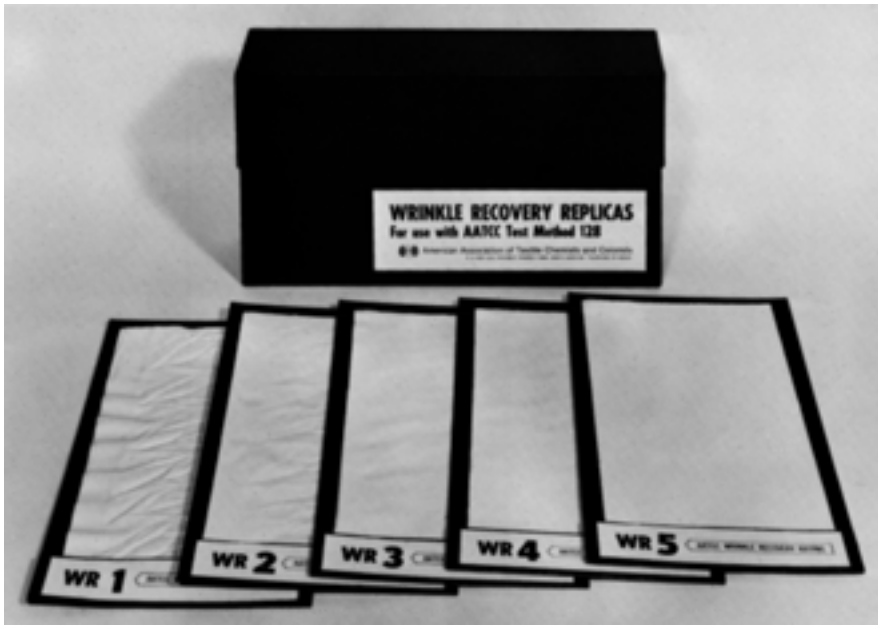

Fig. 2—AATCC Wrinkle Recovery Replicas.

Documents
Document Sharing Hub
Copyright The American Association of Textile Chemists and Colorists
Provided by IHS Markit under license with AATCC
No reproduction or networking permitted without license from IHS
Full document details: AATCC 128 2017
Copyright © 2017 American Association of Textile Chemists and Colorists
Licensee=, User=,
Not for Resale,

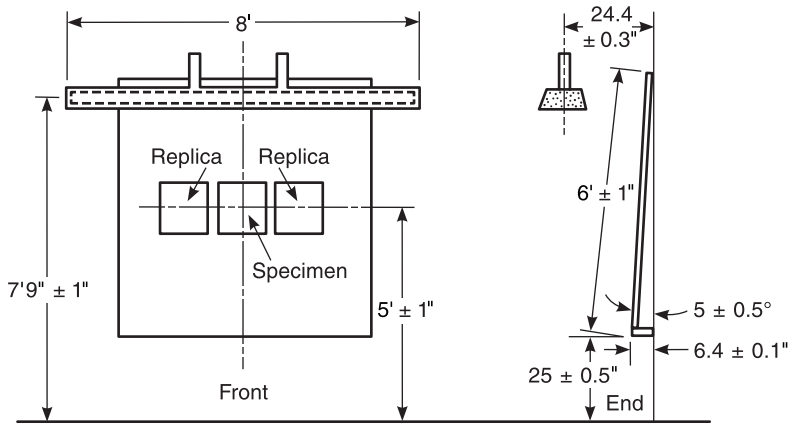

Fig. 3—Lighting equipment for viewing test specimens.

Materials list: (a) Two 8-ft Type F96 CW (Cool White) preheat Rapid Star fluorescent lamps (without baffle or glass). (b) One white enamel reflector (without baffle or glass). (c) One general type swatch mount, spring loaded. Fabricate using light sheet metal (22 ga.). (d) One ¼ in. plywood mounting board painted to match No. 2 gray chip on Gray Scale for Staining (see 11.9).

lower the top flange gently with one hand until it comes to rest.

7.7 Immediately place a total of 3500 grams weight on the top flange and record the exact time.

7.8 After 20 min, remove the weights, remove the springs and clamps, raise the top flange and gently remove the specimen from the tester so as not to distort any induced wrinkles (see 11.5).

7.9 With a minimum of handling, place the shorter edge (15 cm) (6 in.) under the clips on the clothes hanger and allow the specimen to hang vertically in the long direction.

7.10 After 24 h in the standard atmosphere gently remove the hanger with the specimen to the evaluation site (see 11.6).

8. Evaluation

8.1 Three trained observers should rate each test specimen independently (see 11.7).

8.2 Mount the test specimen on the viewing board as illustrated in Fig. 3, with the warp in vertical direction. Place three-dimensional plastic replicas on each side of the test specimen to facilitate comparative rating.

8.2.1 The overhead fluorescent light should be the only light source for the viewing board, and all other lights in the room should be turned off.

8.2.2 It has been the experience of many observers that light reflected from the side walls near the viewing board can interfere with the rating results. It is recommended that the side walls be painted black or that blackout curtains be mounted on either side of the viewing board to eliminate the reflective interference.

8.3 The observer is to stand directly in front of the specimen 4 ft away from the board. It has been found that normal variations in the height of the observer above and below the arbitrary 5-ft eye level have no significant effect on the rating given.

8.4 Assign the number of the replica which most nearly matches the appearance of the test specimens.

8.4.1 A No. 5 rating is equivalent to the WR-5 Replica and represents the smoothest appearance and best retention of original appearance, while a No. 1 rating is equivalent to the WR-1 Replica and represents the poorest appearance and poorest retention of original appearance (see Table I).

8.5 Similarly, the observer independently rates each of the other two test specimens. The other two observers proceed in the same manner assigning ratings independently.

8.6 A digital imaging system may be used (see 11.8).

9. Calculating and Reporting Results

9.1 Average the nine observations made on each test fabric (three judgments on each of three specimens).

9.2 Report the average to the nearest tenth of a rating.

Table I—Fabric Smoothness Ratings

5—an appearance equivalent to the WR-5 Replica
4—an appearance equivalent to the WR-4 Replica
3—an appearance equivalent to the WR-3 Replica
2—an appearance equivalent to the WR-2 Replica
1—an appearance equivalent to or worse than the WR-1 Replica

10. Precision and Bias

10.1 *Precision*. Precision for this test method has not been established. Until a precision statement is generated for this test method, use standard statistical techniques in making any comparisons of test results for either *within-laboratory* or *between-laboratory* averages.

10.2 *Bias*. The wrinkle recovery of fabrics (appearance method), can be defined only in terms of a test method. There is no independent method for determining the true value. As a means of estimating this property, the method has no known bias.

11. Notes

11.1 The AATCC Wrinkle Tester is provided for introducing wrinkles in the test specimen under controlled conditions. This apparatus is based on a development of ENKA/AKU Research. The apparatus is obtainable from AATCC, P.O. Box 12215, Research Triangle Park NC 27709; tel: +1. 919.549.8141; fax: +1.919.549.8933; e-mail: orders@aatcc.org; web site: www.aatcc.org.

11.2 All three weights (500, 1000 and 2000 g) provided with this tester are used in the test. The top flange assembly weighs 500 g which is 200 g heavier than that of the AKU Wrinkle Tester. The AKU Wrinkle Tester may be used for this test by adding 200 g to the top flange.

11.3 Available from AATCC, P.O. Box 12215, Research Triangle Park NC 27709; tel: +1.919.549.8141; fax: +1.919.549.8933; e-mail: orders@aatcc.org; web site: www.aatcc.org.

11.4 Cut specimens from a wrinkle-free area of the fabrics. If any wrinkles are unavoidably present in the test specimens, press each lightly with a steam iron before conditioning.

11.5 If the test has been run properly, diagonal wrinkles should run through the center portion of the specimen.

11.6 Evaluation area should also be maintained at 21 ± 2°C (70 ± 4°F) and 65 ± 5% RH.

11.7 Since previous tests have proven that specimens do change in appearance during the first few hours, it is important that accurate times be observed and that a minimum time elapses while the three observers are evaluating the samples. Because of these changing conditions, the duration of recovery before rating in this method has been standardized at 24 h.

11.8 A digital imaging system may be used in place of the visual replicas if it has been established by the user that its accuracy is equivalent.

11.9 Approximate CIELAB values for the Step 2 chip on the Gray Scale for Staining are L* = 77, a* = 0, b* = 0. A tolerance of two units for each parameter is acceptable for the board color in this test method.

Copyright The American Association of Textile Chemists and Colorists
Provided by IHS Markit under license with AATCC
No reproduction or networking permitted without license from IHS
Full document details: AATCC 128 2017
Copyright © 2017 American Association of Textile Chemists and Colorists
Licensee=, User=,
Not for Resale,
AVA Documents Document Sharing Hub