Test Method for Water Repellency: Spray

Developed in 1941 by AATCC Committee RA63; revised 1952, 1996, 2001, 2005, 2017; reaffirmed 1943, 1961, 1964, 1967, 1971, 1974, 1977, 1980, 1985, 1989, 2010, 2014; editorially revised 1987, 2008, 2016, 2019. Technically equivalent to ISO 4920.

1. Purpose and Scope

1.1 This test method is applicable to any textile fabric, which may or may not have been given a water-repellent finish. It measures the resistance of fabrics to wetting by water. It is especially suitable for measuring the water-repellent efficacy of finishes applied to fabrics.

1.2 The results obtained with this test method depend on the resistance to wetting or water repellency of the fibers, yarns and finishes on the fabric, and upon the construction of the fabric.

2. Principle

2.1 Water sprayed against the taut surface of a test specimen under controlled conditions produces a wetted pattern whose size depends on the repellency of the fabric. Evaluation is accomplished by comparing the wetted pattern with pictures on a standard chart.

3. Terminology

3.1 **water repellency,** n.—*in textiles*, the characteristic of a fiber, yarn or fabric to resist wetting.

3.2 **face,** n.—*in textiles*, the side of a fabric that is intended to be the outer visible surface in an end product.

4. Safety Precautions

NOTE: These safety precautions are for information purposes only. The precautions are ancillary to the testing procedures and are not intended to be all inclusive. It is the user's responsibility to use safe and proper techniques in handling materials in this test method. Manufacturers MUST be consulted for specific details such as material safety data and other manufacturer's recommendations. All OSHA standards and rules must also be consulted and followed.

4.1 Good laboratory practices should he followed. Wear safety glasses in all laboratory areas.

5. Uses and Limitations

5.1 The portability and simplicity of the instrument, and the shortness and simplicity of the test procedure, make this method of test especially suitable for screening finishes. It is not intended, however, for use in predicting the probable rain penetration resistance of fabrics, since it does not measure penetration of water through the fabric. For testing rain penetration, AATCC TM35, Test Method for Water Resistance: Rain Test, should be used.

6. Apparatus and Materials (see 11.1)

6.1 AATCC Spray Tester (see 11.2, Figs. 1, 2, 2A and 3).

6.2 Graduated cylinder, 250 mL.

6.3 Water, distilled.

6.4 Stopwatch (see 8.3)

7. Test Specimens

7.1 Three test specimens 180.0 × 180.0 mm (7.0 × 7.0 in.) are needed and should be conditioned at 65 ± 5% relative humidity and 21 ± 2°C (70 ± 4°F) for a minimum of 4 h before testing.

7.2 Where possible, each specimen should contain different groups of lengthwise and widthwise yarns.

8. Procedure

8.1 Calibrate the apparatus by pouring 250 mL of distilled water at 27 ± 1°C (80 ± 2°F) into the funnel of the tester and measure the time required for the funnel to empty.

8.1.1 The spray time must be between 25-30 s, otherwise the nozzle should be checked to see if the holes are enlarged or blocked. Nominal hole size is indicated in Fig. 3, but spray time is the critical value for calibration.

8.2 Fasten the test specimen securely in the 152.4 mm (6.0 in.) diameter hoop

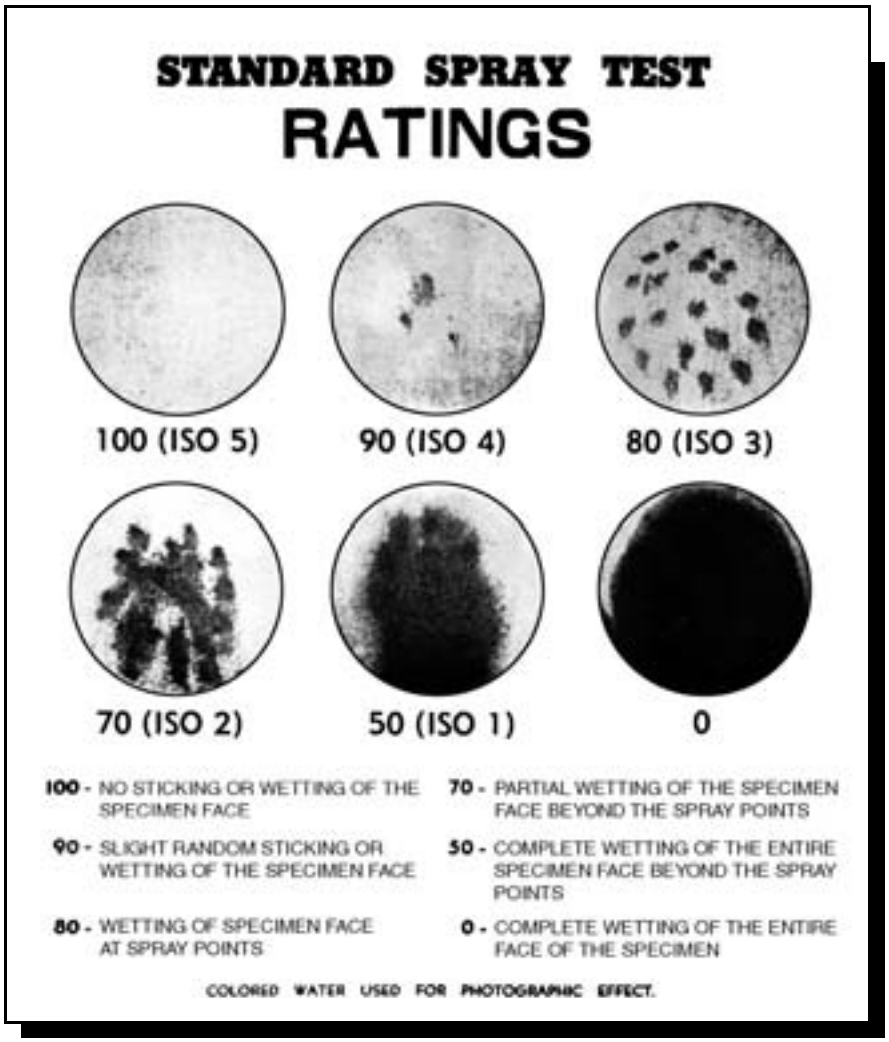

Fig. 1—Spray test rating chart.

Documents Document Sharing Hub
Copyright © 2021 American Association of Textile Chemists and Colorists
Full document details: AATCC TM22 2017

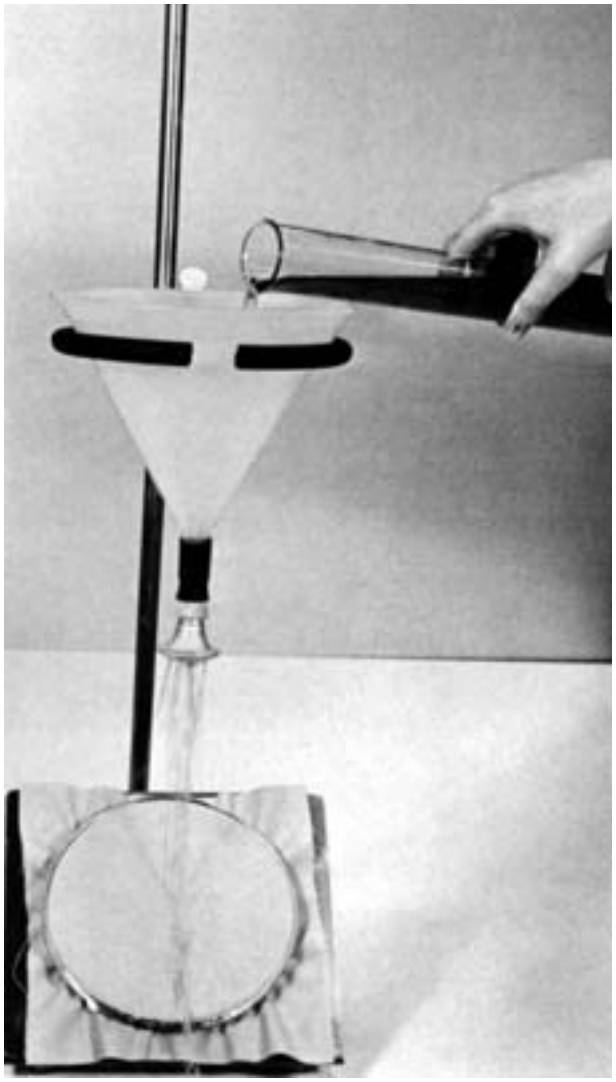

Fig. 2—AATCC spray tester.

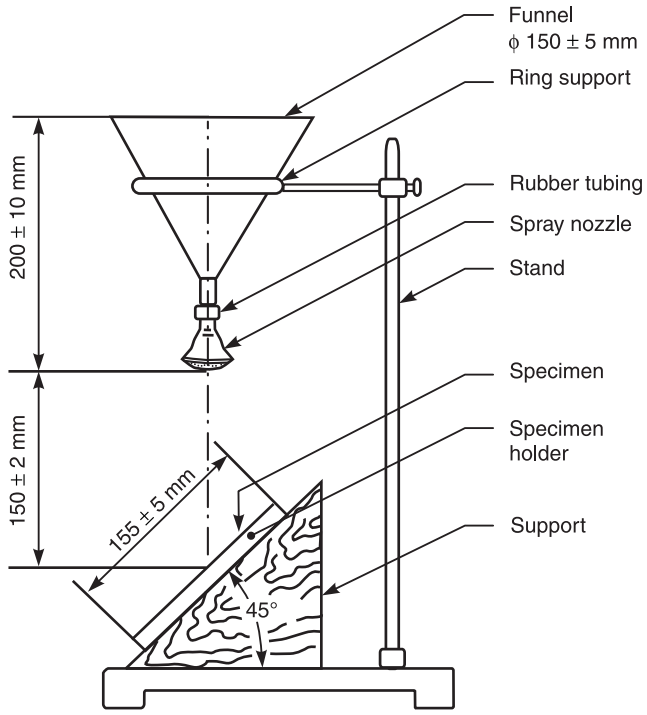

Fig. 2A—Details of AATCC spray tester.

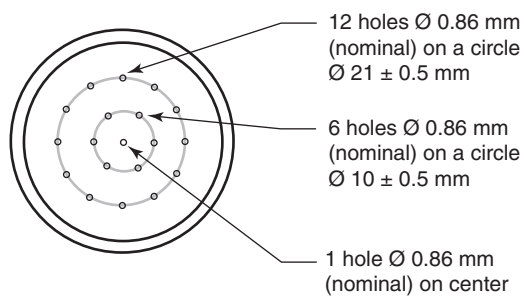

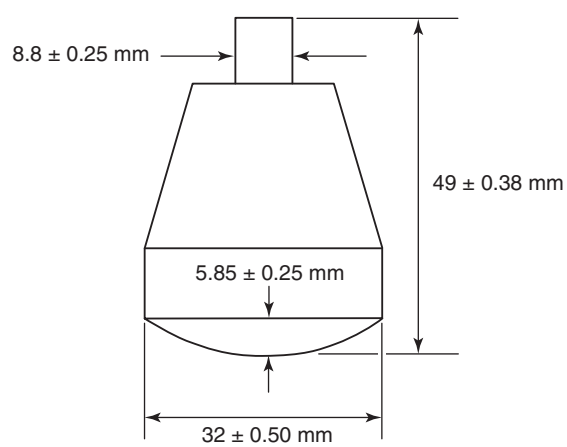

Fig. 3—Nozzle for spray tester.

so that the face of the fabric specimen will be exposed to the water spray. The surface of the specimen should be smooth and without wrinkles.

8.3 Place the hoop on the stand of the tester with the fabric uppermost in such a position that the center of the spray pattern coincides with the center of the hoop (see Fig. 2A).

8.3.1 In the case of twills, gabardines, piques or fabrics with similar ribbed construction, place the hoop on the stand in such a way that the fabric is oriented in the same direction as it will be used in the end product.

8.4 Pour 250 mL of distilled water at 27 ± 1°C (80 ± 2°F) into the funnel of the tester and allow it to spray onto the test specimen for 25-30 s.

8.4.1 Avoid touching the funnel with the graduated cylinder while pouring the distilled water. Movement of the funnel will alter the spray disposition on the specimen.

8.5 Take the hoop by the bottom edge and tap the opposite edge firmly once

Documents
Document Sharing Hub
Copyright © 2021 American Association of Textile Chemists and Colorists
Full document details: AATCC TM22 2017