Test Method for Wrinkle Recovery of Woven Fabrics: Recovery Angle

Developed in 1951 by AATCC Committee RR6; jurisdiction transferred in 1995 to AATCC Committee RA61; revised 1952, 1953, 1956, 1959, 1998 (with title change), 2017; reaffirmed 1968, 1972, 1975, 1978, 1984, 1990, 2003, 2014; editorially revised 1986, 1991, 1995, 2006, 2008, 2016, 2019; reaffirmed and editorially revised 1996; Option 1, Partly equivalent to ISO 2313.

1. Purpose and Scope

1.1 This test method is used to determine the wrinkle recovery of woven fabrics. It is applicable to fabrics made from any fiber, or combination of fibers.

2. Principle

2.1 A test specimen is folded and compressed under controlled conditions of time and force to create a folded wrinkle. The test specimen is then suspended in a test instrument for a controlled recovery period, after which the recovery angle is recorded.

3. Terminology

3.1 **wrinkle recovery,** n.—that property of a fabric which enables it to recover from folding deformations.

4. Safety Precautions

NOTE: These safety precautions are for information purposes only. The precautions are ancillary to the testing procedures and are not intended to be all inclusive. It is the user's responsibility to use safe and proper techniques in handling materials in this test method. Manufacturers MUST be consulted for specific details such as material safety data sheets and other manufacturer's recommendations. All OSHA standards and rules must also be consulted and followed.

4.1 Good laboratory practices should be followed. Wear safety glasses in all laboratory areas.

5. Uses and Limitations

5.1 Two options for performing wrinkle recovery angle testing are included in this test method. The Option 1 procedure is applicable to equipment commercially available and similar to devices used in ISO 2313: Determination of the Recovery from Creasing of a Horizontally Folded Specimen by Measuring the Angle of Recovery (see 13.1). The Option 2 procedure is for those laboratories that still have the older recovery devices which are no longer available from their original source.

5.2 This method has been used as a research tool and for production quality control; however, it is not recommended to be used for acceptance testing (see 13.2).

5.3 Parameters to be controlled in the test are: relative humidity, temperature, applied pressure, time under pressure, and recovery time. This method specifies arbitrary selected values for the latter three factors, based on a compromise between conditions likely to be encountered in service, and the expeditious conduct of the test. Two conditions of temperature and relative humidity are specified as being representative of normal experience. For specialized purposes, it may be advisable to use other combinations of temperature and humidity.

5.4 Specimens from limp or heavy weight fabrics may twist or curl making angle readings difficult to determine (see 13.3).

6. Apparatus (see 13.4)

6.1 Wrinkle Recovery Tester and accessories, Option 1 (see Fig. 1).

6.1.1 Loading device with two flat plates (see Fig. 2).

6.1.2 Wrinkle Recovery Circular Scale divided into degrees over the range 10–180° (see Fig. 3).

Fig. 1—Option 1—Wrinkle Recovery Angle Tester and accessories.

6.1.3 Paper or aluminum foil not exceeding 0.04 mm thick.

6.2 Wrinkle Recovery Tester and accessories, Option 2 (see Fig. 4).

6.2.1 Disk and protractor with clamp mounted to the disk (see Fig. 4).

6.2.2 Specimen holder with two superimposed stainless steel leaves, 0.16 ± 0.01 mm thick, fastened together at one end. The top leaf is shorter than the bottom leaf.

6.2.3 Plastic press, consisting of two superimposed leaves 95 × 20 mm fastened together at one end. A 23 × 20 mm plastic section is attached to the outer surface of the free end of one leaf, flush with the outer edges that form a platform for a weight.

6.3 Tweezers with a jaw width of 25 mm and a line marked on both external faces 5 mm from the end and parallel to the jaw width (see Fig. 5). Another pair of tweezers, preferably plastic, is needed to handle specimens.

6.4 Clock or timer accurate to ± 1 s.

6.5 Template, 40 × 15 mm.

6.6 Weight, 500 ± 5 g.

6.7 Conditioning chamber suitable for the manipulation of the test specimen and the test apparatus that can produce atmospheres other than the standard atmosphere for testing textiles.

7. Test Specimens

7.1 Identify the face and back of the fabric sample. Avoid taking specimens from creased, wrinkled, or distorted sections of the sample.

7.2 Cut 12 specimens 40 × 15 mm, six with their long dimension parallel to the warp direction of the fabric and six with their long dimension parallel to the filling direction.

7.2.1 Cut warp specimens from sample locations with different warp yarns. Cut filling specimens from sample locations with different filling yarns (see Fig. 6). Unless otherwise specified, take specimens no nearer the selvage or edge of the fabric than one tenth the width of the fabric.

7.3 Mark the fabric face of each specimen.

7.4 Avoid handling or distorting the specimens. The use of a template or die for cutting the specimens and tweezers for handling them is recommended.

Copyright © 2021 American Association of Textile Chemists and Colorists

Documents Document Sharing Hub
Full document details: AATCC TM66 2017

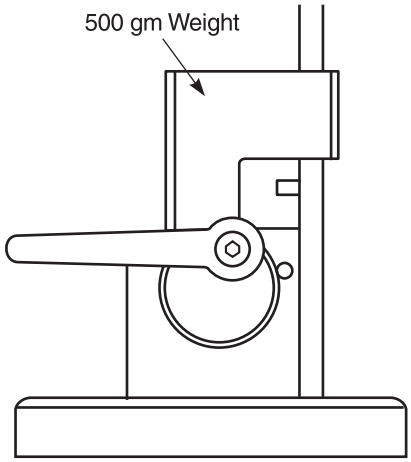

Fig. 2—Option 1—Loading device.

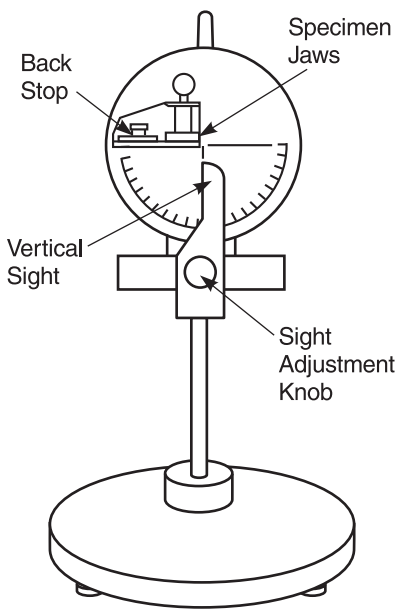

Fig. 3—Option 1—Wrinkle Recovery Angle Tester.

Fig. 4—Option 2—Wrinkle Recovery Tester and accessories.

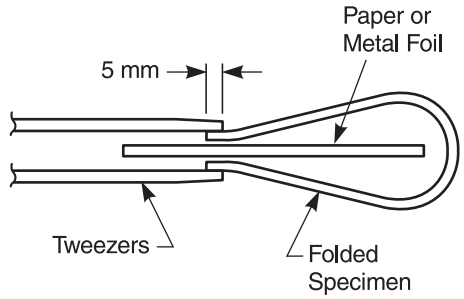

Fig. 5—Option 1—Folding of specimen.

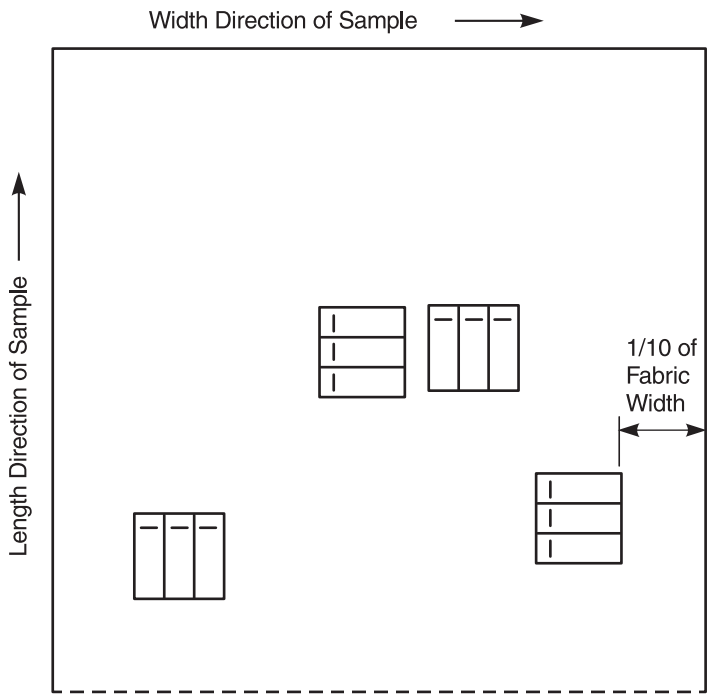

Fig. 6— Specimen sampling layout.

8. Conditioning

8.1 Lay specimens flat to condition at 65 ± 5% RH, 21 ± 2°C (70 ± 4°F) for at least 24 h prior to testing. Shorter conditioning periods which still allow attainment of equilibrium moisture content are acceptable.

8.2 If other atmospheres are used, they should be reported with the test results (see 11.3). For example, high humidity determinations may be made after conditioning samples at 35 ± 1°C (95 ± 2°F), 90 ± 2% RH for 24 h prior to testing.

9. Procedure

9.1 Option 1.

9.1.1 Three sets of loading devices, crease recovery scales and weights can be used to test three specimens sequentially, one after another every 60 s.

9.1.2 Fold a face-to-face specimen end-to-end and hold it in this position with tweezers, gripping no more than 5 mm from the ends. In instances where the surfaces of the specimens show a tendency to stick together, place a piece of paper or aluminum foil, 18 × 14 mm, between the ends of the specimen (see Fig. 5). Avoid touching the specimen with anything other than the tweezers.

9.1.3 Place the folded specimen between the two leaves of the loading device and immediately apply the weight. Start a timing device. Wait 60 ± 2 s to repeat steps 9.1.2 and 9.1.3 for the next specimen. Wait another 60 ± 2 s to start the third specimen's load timing.

9.1.4 After 5 min ± 5 s, quickly but smoothly, remove the weight from the first specimen so that the specimen press does not spring open.

9.1.5 Using tweezers, transfer the folded specimen to the instrument's circular scale specimen holder. If paper or foil was used, remove it at this time. In-

Documents
Document Sharing Hub
Copyright © 2021 American Association of Textile Chemists and Colorists
Full document details: AATCC TM66 2017