American Concrete Institute
Always advancing

ACI 364.14T-17
TechNote

Section Loss Determination of Damaged or Corroded Reinforcing Steel Bars

Keywords: concrete repair; corrosion; reinforcing steel bar; section loss; uncoated.

Introduction

This document describes a method for determining the section loss (Fig. 1) of deformed and square, uncoated, round, reinforcing steel bars due to damage, corrosion, or both. A similar procedure can be used to determine the section loss of deformed square and twisted square reinforcing steel bars due to damage, corrosion, or both. Reinforcing bar section loss is the loss of cross-sectional area that can reduce the load-carrying capacity of a member. Section loss is typically caused by corrosion of the reinforcing bar or construction damage, such as saw cutting or drilling into a reinforcing bar.

Figure 2 shows examples of reinforcing bars with section loss. This document does not address evaluation of the load-carrying capacity of a member, or determining if a repair is required. These tasks should be performed by a licensed design professional based on a review of existing conditions (ACI 546R [ACI Committee 564 2014]).

Question

How is the section loss of a corroded or damaged reinforcing bar determined?

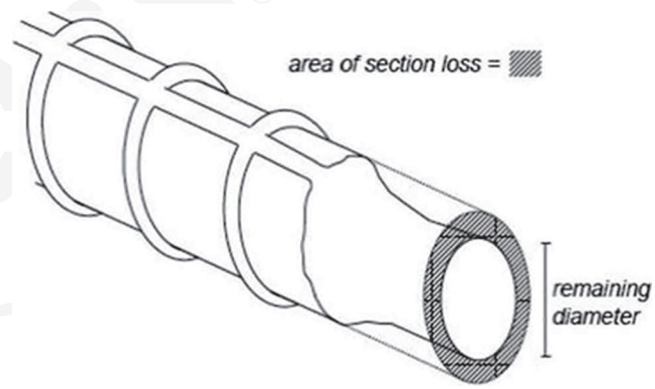

Fig. 1—Section loss in reinforcing bar.

Answer

The following steps are used to determine reinforcing bar section loss.

1. **Determine original reinforcing bar diameter (D_o):** There are several options for determining a reinforcing bar's original diameter. If the original reinforcing steel size can be confirmed from existing design drawings, the nominal diameter can be determined based on the specified bar size. If the in-place reinforcing bar includes a legible bar size marking, the nominal diameter based on bar size can be used. For guidance, refer to ASTM A615/A615M and CRSI (2010, 2016). If the original reinforcing bar size is unknown and cannot be determined based on the options mentioned previously, the method described as follows in Step 2 is used at a location on the bar where there is no perceived section loss (Fig. 3).

2. **Determine reinforcing bar diameter (D_c) in damaged/corroded area:** To determine the reinforcing bar's current diameter in damaged/corroded areas, first remove any scale or corrosion products from the reinforcing bar, then:

(a) Select the location along the reinforcing bars with the most section loss. Several areas may have to be measured along the bar to determine the location with the most section loss. Using calibrated caliper, take two measurements of the reinforcing bar's diameter at the same location (D_c^1 and D_c^1), with each measurement taken 90 degrees from the other (Fig. 4). Record each measurement to the nearest ±1/16 in. (±1.6 mm) and round to nearest 0.01 in. (0.25 mm).

(b) Calculate the average diameter (D_{ca}) by taking the average of two measurements (D_c^1 and D_c^2) (Eq. (1)). Round average diameter to nearest 0.01 in. (0.25 mm).

AVA Documents
Document Sharing Hub

Full document details: ACI 364.14T-17

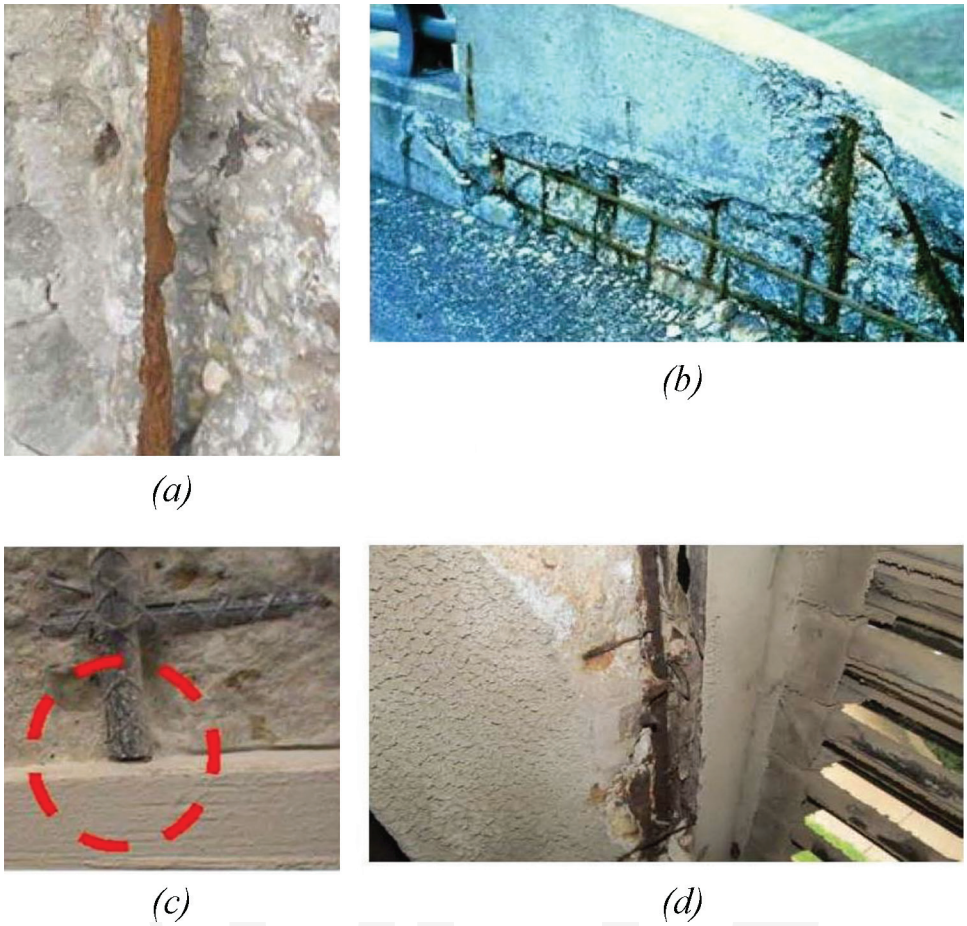

Fig. 2—Examples of reinforcing bars showing section loss: (a) reinforcing steel showing heavy corrosion; (b) exposed reinforcing steel due to corrosion in need of assessment; (c) reinforcing steel damaged by saw cut along edge of repair area; and (d) severely corroded reinforcing bars.

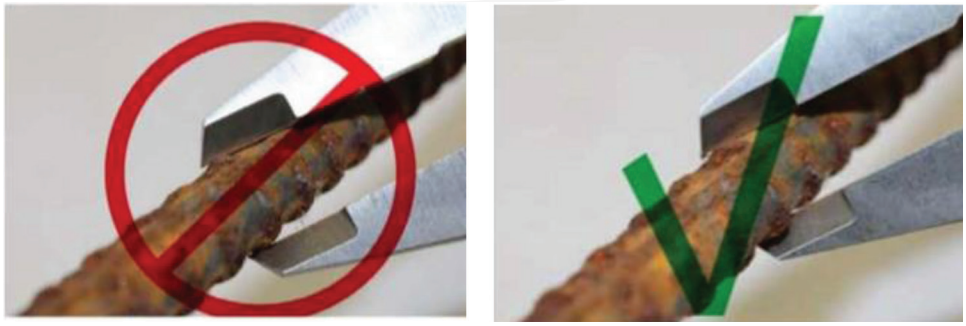

Fig. 3—Correct procedure for measuring reinforcing bar diameter. All measurements should be of the core bar without including the deformations. Note the diameter measurements should be taken of the bar without deformations or ribs and rounded to the nearest ±1/16 in. (±1.6 mm).

Fig. 4—Procedure for cross-sectional diameter measurement. Note that the measurements should made at a section with the maximum section loss.

Documents
Document Sharing Hub
American Concrete Institute – Copyrighted © Material – www.concrete.org
Full document details: ACI 364.14T-17