# Report on Design and Construction with Insulating Concrete Forms (ICFs)

Reported by ACI Committee 560

ACI 560R-16

American Concrete Institute

Always advancing
Documents
Document Sharing Hub

Full document details: ACI 560R-16

First Printing
June 2016
ISBN: 978-1-945487-01-9

# Report on Design and Construction with Insulating Concrete Forms (ICFs)

Copyright by the American Concrete Institute, Farmington Hills, MI. All rights reserved. This material may not be reproduced or copied, in whole or part, in any printed, mechanical, electronic, film, or other distribution and storage media, without the written consent of ACI.

The technical committees responsible for ACI committee reports and standards strive to avoid ambiguities, omissions, and errors in these documents. In spite of these efforts, the users of ACI documents occasionally find information or requirements that may be subject to more than one interpretation or may be incomplete or incorrect. Users who have suggestions for the improvement of ACI documents are requested to contact ACI via the errata website at http://concrete.org/Publications/DocumentErrata.aspx. Proper use of this document includes periodically checking for errata for the most up-to-date revisions.

ACI committee documents are intended for the use of individuals who are competent to evaluate the significance and limitations of its content and recommendations and who will accept responsibility for the application of the material it contains. Individuals who use this publication in any way assume all risk and accept total responsibility for the application and use of this information.

All information in this publication is provided “as is” without warranty of any kind, either express or implied, including but not limited to, the implied warranties of merchantability, fitness for a particular purpose or non-infringement.

ACI and its members disclaim liability for damages of any kind, including any special, indirect, incidental, or consequential damages, including without limitation, lost revenues or lost profits, which may result from the use of this publication.

It is the responsibility of the user of this document to establish health and safety practices appropriate to the specific circumstances involved with its use. ACI does not make any representations with regard to health and safety issues and the use of this document. The user must determine the applicability of all regulatory limitations before applying the document and must comply with all applicable laws and regulations, including but not limited to, United States Occupational Safety and Health Administration (OSHA) health and safety standards.

Participation by governmental representatives in the work of the American Concrete Institute and in the development of Institute standards does not constitute governmental endorsement of ACI or the standards that it develops.

Order information: ACI documents are available in print, by download, through electronic subscription, or reprint and may be obtained by contacting ACI.

Most ACI standards and committee reports are gathered together in the annually revised ACI Manual of Concrete Practice (MCP).

**American Concrete Institute**
**38800 Country Club Drive**
**Farmington Hills, MI 48331**
**Phone: +1.248.848.3700**
**Fax: +1.248.848.3701**

**www.concrete.org**

Documents
Document Sharing Hub

Full document details: ACI 560R-16

# ACI 560R-16

# Report on Design and Construction with Insulating Concrete Forms (ICFs)

Reported by ACI Committee 560


Robert C. Rogers, Chair

James A. Farny, Secretary

David H. DeValve
Kelvin L. Doerr
Brian C. Gerber
Anthony I. Johnson
James A. Lane
Lionel A. Lemay
Kenneth A. Luttrell
Patrick F. O'Brien Jr.
Robert E. Sculthorpe
Michael H. Weber
Carla V. Yland



*Insulating concrete forms (ICFs) are leave-in-place forms typically produced in block or panel shapes of expanded polystyrene (EPS). They provide additional components, such as insulation and a substrate for interior and exterior finish attachment, for a wall or floor system. The most widely used ICFs are block shapes, which are stacked in an interlocking fashion to create stable formwork for creation of reinforced concrete walls. Due to the variability of these manufactured form systems, this report does not attempt to address every ICF type, but provides a commentary on those systems most prevalent in the market, and insight, as well as additional information, relative to their use in design and construction. The report focuses on ICFs for walls.*



**Keywords:** bracing system; crossties; expanded polystyrene; formwork configurations; formwork materials; insulating concrete forms; polypropylene; polyurethane; screen grid; wall design; wall systems; web.


## CONTENTS


**CHAPTER 1—INTRODUCTION AND SCOPE, p. 2**
1.1—Introduction, p. 2
1.2—Scope, p. 3

**CHAPTER 2—DEFINITIONS, p. 3**

**CHAPTER 3—INSULATING CONCRETE FORM SYSTEMS, p. 3**
3.1—Flat-wall, p. 3
3.2—Additional ICF systems, p. 3

**CHAPTER 4—MATERIALS, p. 5**
4.1—Concrete mixture, p. 5
4.2—Reinforcing materials overview, p. 6

**CHAPTER 5—INSULATING CONCRETE FORMS, p. 6**
5.1—Formwork material, p. 6
5.2—Formwork configurations, p. 6
5.3—Insulating concrete form components, p. 7
5.4—Material performance requirements, p. 8
5.5—Bracing and scaffolding, p. 9
5.6—Miscellaneous, p. 9

**CHAPTER 6—DESIGN AND ACI 318 APPLICATION, p. 9**
6.1—General, p. 9
6.2—Flat wall ICF systems: application of ACI 318, p. 10
6.3—Waffle grid ICF wall systems: application of ACI 318, p. 11
6.4—Screen grid and post-and-beam ICF wall systems: application of ACI 318, p. 12
6.5—Other design resources for ICF wall systems, p. 13



ACI Committee Reports, Guides, and Commentaries are intended for guidance in planning, designing, executing, and inspecting construction. This document is intended for the use of individuals who are competent to evaluate the significance and limitations of its content and recommendations and who will accept responsibility for the application of the material it contains. The American Concrete Institute disclaims any and all responsibility for the stated principles. The Institute shall not be liable for any loss or damage arising therefrom.

Reference to this document shall not be made in contract documents. If items found in this document are desired by the Architect/Engineer to be a part of the contract documents, they shall be restated in mandatory language for incorporation by the Architect/Engineer.



ACI 560R-16 was adopted and published June 2016.



Copyright © 2016, American Concrete Institute.

All rights reserved including rights of reproduction and use in any form or by any means, including the making of copies by any photo process, or by electronic or mechanical device, printed, written, or oral, or recording for sound or visual reproduction or for use in any knowledge or retrieval system or device, unless permission in writing is obtained from the copyright proprietors.





Documents
Document Sharing Hub
aci
Full document details: ACI 560R-16

**CHAPTER 7—CONSTRUCTION, p. 13**
7.1—Planning the construction process, p. 13
7.2—Foundation/multiple level considerations, p. 14
7.3—Reinforcing steel placement considerations, p. 14
7.4—Work implementation, p. 14

**CHAPTER 8—REFERENCES, p. 15**
Authored documents, p. 16

## CHAPTER 1—INTRODUCTION AND SCOPE

### 1.1—Introduction

This report is a comprehensive introduction to the design and construction of reinforced concrete structures with insulating concrete forms (ICFs). ICFs are stay-in-place concrete forms that create vertical elements such as walls, columns, and pilasters, and horizontal elements such as floors and roofs. This report focuses on ICFs for walls.

ICFs that result in reinforced concrete walls are of varying dimensions and manufactured in blocks, planks, panels, and other shapes. They are made of plastic foam or a blended combination of other types of material such as cement, foam, and wood fiber. The most common ICFs used for wall construction typically provide two layers of low-absorptive foam plastic insulation held together with a system of crossties. The crossties are also typically configured to allow for direct attachment of internal and external finishes to the ICF. Reinforcing steel can be installed within the hollow portion of the form, followed by concrete placed to create a reinforced concrete wall. Figures 1.1a through 1.1c are examples of ICFs used for wall construction.

There are many manufacturers of ICFs. An ICF manufacturer's form design is proprietary, so each has specific characteristics and limitations. While individual ICFs perform similarly, they are not generally interchangeable. Most major ICF manufacturers have their own proprietary training programs supporting residential and commercial construction. Insulating concrete forms are typically lightweight so they are easy to handle and place. Concrete placement when using ICFs is completed by skilled craft construction crews who are trained and experienced with concrete placement and consolidation per ACI 301.

In spite of their simplicity, ICFs are based on extensive research and continue to evolve with changes in technology. Because there are many proprietary systems, and building codes do not offer general guidance about ICF construction, this report provides background information that is useful for designing and building ICF structures. This report also supplements proprietary information available from individual manufacturers with general information applying to most ICFs. In addition to informing designers and builders, this report is useful to building officials and other professionals who work with ICFs.

Originally evolved in Switzerland near the end of World War II, the earliest versions of ICFs were made from treated wood fibers and portland cement. In the late 1940s and 50s, plastic foams were developed, and by the late 1960s, the concepts of combining plastic foams and ICFs together resulted in the creation of contemporary ICFs. In the 1980s and 90s, numerous companies and products emerged. Growth in the number of ICF manufacturers led to the creation of the Insulating Concrete Form Association (ICFA) in the mid-1990s with a primary goal to advance the industry.

Insulating concrete forms initially entered the residential marketplace through their use in foundations and basements. They expanded into above-grade walls, often in more expen-

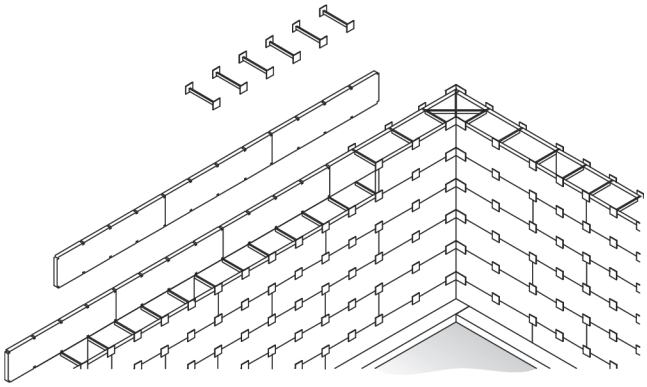

*Fig. 1.1a—Panel and tile construct-in-place ICF system.*

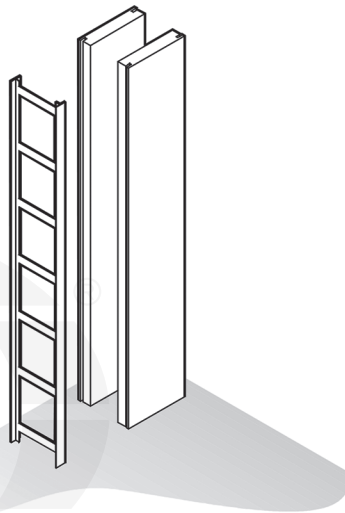

*Fig. 1.1b—Vertical ladder and panel ICF system (ladder for interconnection).*

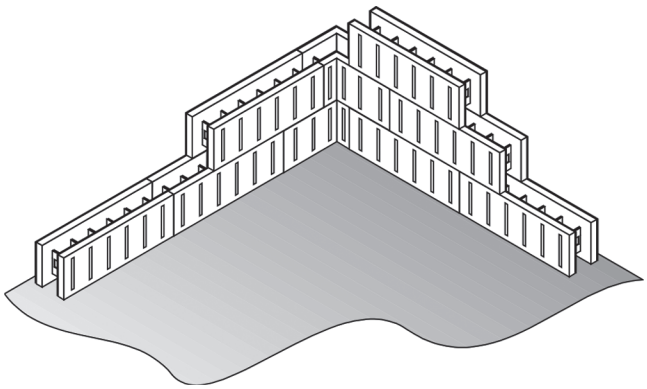

*Fig. 1.1c—Block-type ICF system.*

American Concrete Institute – Copyrighted © Material – www.concrete.org
Full document details: ACI 560R-16

sive, large-scale homes. However, as more manufacturers entered the market and ICFs became more readily available with a larger installer base, they gained increased acceptance in all residential construction. ICFs increased almost sixfold in market share between 1996 and 2006 in the residential construction market for both below-grade and above-grade walls (Lyman 2007). With residential applications historically accounting for a large percentage of the ICF market, commercial ICF projects continued to grow in market share and magnitude of project scope and complexity. Increased use of ICFs throughout the United States for residential and commercial construction has led to the need for more detailed guidance and documentation.

Product innovation continues, with additional differentiating features among ICF manufacturers, including crosstie material type, crosstie geometric configuration to facilitate reinforcing bar positioning, crosstie configuration for finish attachment, form shape, and interlocking mechanisms. Some manufacturers offer compatible insulated horizontal ICFs—for example, floors and roofs—providing a total cast-in-place concrete building envelope.

### 1.2—Scope

As noted previously, there are many proprietary ICF systems, and building codes do not offer general guidance about ICF construction. This report provides background information that is useful for designing and building ICF structures. It also supplements proprietary information available from individual manufacturers with general information applying to most ICFs. This report is also useful to building officials and other professionals who may work with ICFs.

Construction in the United States has undergone several important changes in the past century. With these changes have come codes and standards to assist owners, building officials, designers, and contractors in constructing quality structures that are durable and sustainable, with more emphasis on energy efficiency. Quality-of-life issues are also being addressed, either through codes or other building criteria, notably the development of green building rating systems and programs promoting greater energy efficiency and sustainability (USGBC 2010). Occupant health, safety, and general well-being—for example, resilient construction—are also being identified as important factors in building construction practices, integrating entire building envelopes into a cohesive system. This ultimately is moving today's industry toward more sustainable structures that are longer-lasting and resilient enough to reduce rebuilding, thereby reducing energy consumption.

Research on ICFs is addressed in detail throughout this document. Manufacturers should provide specific, detailed information about their proprietary products and tests demonstrating performance of the ICF in meeting the intent of applicable building codes. Whether this information is available as an evaluation service report or some other technical report, it should allow a licensed design professional to determine whether an ICF is appropriate for a particular application.

## CHAPTER 2—DEFINITIONS

ACI provides a comprehensive list of definitions through an online resource, "ACI Concrete Terminology," https://www.concrete.org/store/productdetail.aspx?ItemID=CT13. Definitions provided herein complement that resource.

**crossties**—connectors, typically of plastic or metal, that join two opposite faces of insulating concrete forms.

**expanded polystyrene**—type of foamed plastic formed by the expansion of polystyrene resin beads in a molding process; when formed into planks or boards, sometimes referred to by the slang term "bead board".

**foamed plastic**—plastic expanded chemically, mechanically, or thermally to form a lightweight, closed-cell structure; usually expanded or extruded to make a lightweight insulating material that can be formed into any shape, including panels or blocks.

**insulating concrete form**—stay-in-place concrete forming system usually composed of foamed plastic and associated crossties or webs; the form has particular insulating characteristics as well as usually serving a structural purpose for attachment of interior and exterior finishes.

**polypropylene**—thermoplastic polymer material commonly used as crossties in insulating concrete forms.

**seismic design category**—classification assigned to a structure based on its risk category and severity of the design earthquake ground motion at the site.

**web**—connection between two opposite faces of an insulating concrete form block, usually made from the same material as the insulating concrete form itself, such as expanded polystyrene, without a crosstie.

## CHAPTER 3—INSULATING CONCRETE FORM SYSTEMS

### 3.1—Flat-wall

Flat-wall insulating concrete form (ICF) systems are the most commonly used in wall construction today. They result in a solid, flat reinforced concrete wall sandwiched between two faces of low-absorptive, foam plastic insulating material, commonly referred to as expanded polystyrene (EPS). The form faces are typically interconnected by polypropylene crossties that are subsequently encapsulated in the reinforced concrete. Figure 3.1a illustrates a typical block-type ICF. Figure 3.1b illustrates the typical isometric and cross section view of the form and the resulting concrete core.

### 3.2—Additional ICF systems

Three additional insulated concrete form (ICF) systems, typically referred to as waffle, screen, and post-and-beam, also create a reinforced concrete core and are commonly referred to as nonflat systems. Figure 3.2a illustrates a waffle system with a concrete core that varies in thickness yet maintains a minimum thickness throughout. A screen system (Fig. 3.2b) and a post-and-beam system (Fig. 3.2c) more aptly resemble a grid-type reinforced concrete structure where there are distinct horizontal and vertical members with intermittent voids filled by the ICF material. The use of nonflat systems is limited by a lack of appropriate design guid-

Document Sharing Hub



Full document details: ACI 560R-16

ance. Chapters 5 and 6 provide information and construction guidance to the licensed design professional applying ACI 318 standards to any ICF system, which can result in a reinforced concrete core of any geometry, including the dimensions and spacing of elements. It is important to note that with any ICF, minimum dimensions need to be provided for the concrete core to accommodate the reinforcing bars. For example, reinforcing bar ties for compression members require minimum overall dimensions to accommodate the minimum bend radius and clear cover requirements.

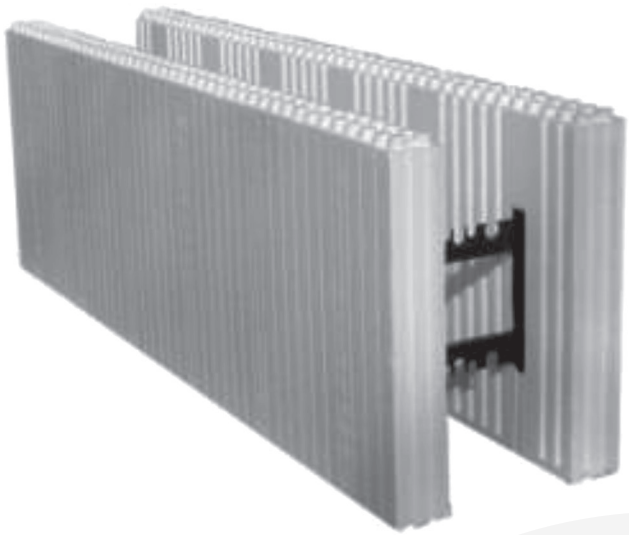

*Fig. 3.1a—Block-type ICF.*

ICF wall construction, depending on the system type, often results in an energy-efficient wall with two insulation layers. The insulation, which is typically more than 2 in. (50 mm) per side, can be varied in thickness and type to provide the desired insulating value. The forms are filled with concrete and, due to the wall's thermal mass, energy consumption is reduced. Thermal mass is a property that enables building materials to absorb, store, and later release significant amounts of heat. Buildings constructed of concrete have a unique energy-saving advantage because of their inherent thermal mass. These materials absorb energy slowly and hold it for much longer periods of time than do less-massive materials. In essence, the form and concrete mass acts like a battery that stores heat or cold, so temperatures stay more consistent in the building's interior. The combined concrete wall, with a layer of insulating material on each side, also creates an envelope less prone to cracks and openings, which reduces migration of conditioned air to the outside and unconditioned air to the inside. ICF wall systems also have excellent acoustic characteristics that result in low

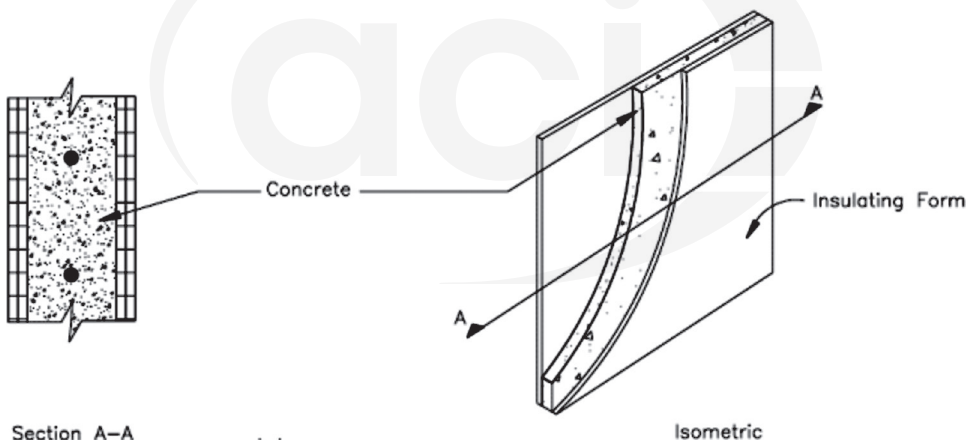


*Fig. 3.1b—Flat wall ICF wall system and plan view Section A-A.*

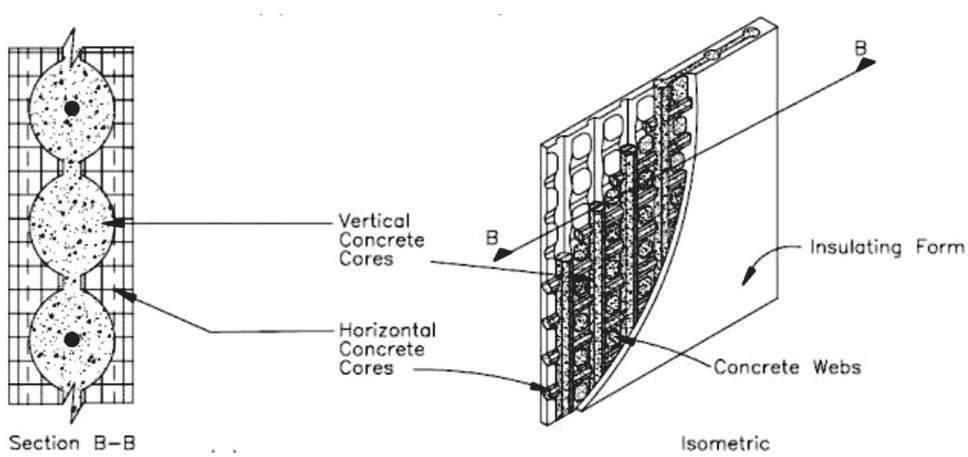


*Fig. 3.2a—Waffle grid ICF wall system and plan view Section B-B.*

Documents
Document Sharing Hub
American Concrete Institute – Copyrighted © Material – www.concrete.org
Full document details: ACI 560R-16