American Concrete Institute®
Advancing concrete knowledge

ACI RAP Bulletin 5

FIELD GUIDE TO
CONCRETE REPAIR
APPLICATION PROCEDURES

Surface Repair Using Form-and-Pump Techniques

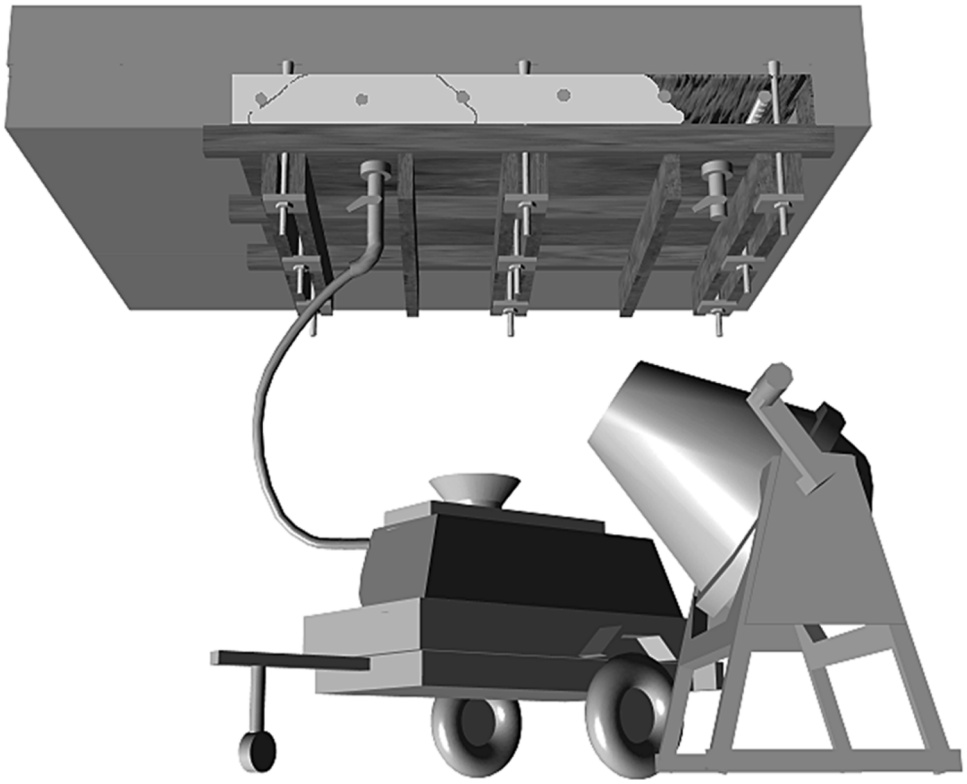

Documents
Document Sharing Hub

Full document details: ACI RAP Bulletin 5 2003

Documents
Document Sharing Hub

Full document details: ACI RAP Bulletin 5 2003

Field Guide to Concrete Repair Application Procedures

Surface Repair Using Form-and-Pump Techniques

Reported by ACI Committee E706

Brian F. Keane
Chair

J. Christopher Ball
Floyd E. Dimmick, Sr.
Peter H. Emmons*
Timothy R. W. Gillespie
H. Peter Golter
Bob Joyce
Kenneth M. Lozen
John S. Lund
Richard Montani
Jay H. Paul
George I. Taylor
Patrick M. Watson
David W. Whitmore

*Primary author.

It is the responsibility of the user of this document to establish health and safety practices appropriate to the specific circumstances involved with its use. ACI does not make any representations with regard to health and safety issues and the use of this document. The user must determine the applicability of all regulatory limitations before applying the document and must comply with all applicable laws and regulations, including but not limited to, United States Occupational Safety and Health Administration (OSHA) health and safety standards.

Structural Disclaimer
This document is intended as a voluntary field guide for the Owner, design professional, and concrete repair contractor. It is not intended to relieve the user of this guide of responsibility for a proper condition assessment and structural evaluation of existing conditions, and for the specification of concrete repair methods, materials, or practices by an experienced engineer/designer.

ACI Repair Application Procedure 5.
Copyright © 2003, American Concrete Institute.
All rights reserved including rights of reproduction and use in any form or by any means, including the making of copies by any photo process, or by electronic or mechanical device, printed, written, or oral, or recording for sound or visual reproduction or for use in any knowledge retrieval system or device, unless permission in writing is obtained from the copyright proprietors. Printed in the United States of America.

The Institute is not responsible for the statements or opinions in its publications. Institute publications are not able nor intended to supplant individual training, responsibility or judgment of the user, or the supplier of the information provided.

Documents
Document Sharing Hub

Full document details: ACI RAP Bulletin 5 2003