Manual of Petroleum Measurement Standards Chapter 14—Natural Gas Fluids Measurement

Section 3—Concentric, Square-Edged Orifice Meters

Part 2—Specification and Installation Requirements

FOURTH EDITION, APRIL 2000
REAFFIRMED, MARCH 2006

American Gas Association	Report No. 3, Part 2
Gas Processors Association	GPA 8185-00, Part 2

American Petroleum Institute

Helping You Get The Job Done Right.SM

Documents
Document Sharing Hub

Copyright American Petroleum Institute
Provided by IHS under license with API
No reproduction or networking permitted without license from IHS
Full document details: AGA Report 3-2 2006

Licensee=Shaw Group Inc/5948357001, User=Tagdiwala, Nihal
Not for Resale, 04/09/2008 00:40:51 MDT

Documents
Document Sharing Hub

Copyright American Petroleum Institute
Provided by IHS under license with API
No reproduction or networking permitted without license from IHS
Full document details: AGA Report 3-2 2006

Licensee=Shaw Group Inc/5948357001, User=Tagdiwala, Nihal
Not for Resale, 04/09/2008 00:40:51 MDT

Manual of Petroleum Measurement Standards Chapter 14—Natural Gas Fluids Measurement

Section 3—Concentric, Square-Edged Orifice Meters

Part 2—Specification and Installation Requirements

Measurement Coordination

FOURTH EDITION, APRIL 2000

American Petroleum Institute

Helping You Get The Job Done Right.SM

--`,,```,,,,``,,,,,,,,,`,```,,,-`-`,,`,,`,`,,`---

Documents
Document Sharing Hub

Copyright American Petroleum Institute
Provided by IHS under license with API
No reproduction or networking permitted without license from IHS
Full document details: AGA Report 3-2 2006

Licensee=Shaw Group Inc/5948357001, User=Tagdiwala, Nihal
Not for Resale, 04/09/2008 00:40:51 MDT

SPECIAL NOTES

API publications necessarily address problems of a general nature. With respect to particular circumstances, local, state, and federal laws and regulations should be reviewed.

API is not undertaking to meet the duties of employers, manufacturers, or suppliers to warn and properly train and equip their employees, and others exposed, concerning health and safety risks and precautions, nor undertaking their obligations under local, state, or federal laws.

Information concerning safety and health risks and proper precautions with respect to particular materials and conditions and construction should be obtained from the employer, the manufacturer or supplier of that material, the material safety data sheet or applicable codes of practices for construction.

Nothing contained in any API publication is to be construed as granting any right, by implication or otherwise, for the manufacture, sale, or use of any method, apparatus, or product covered by letters patent. Neither should anything contained in the publication be construed as insuring anyone against liability for infringement of letters patent.

Generally, API standards are reviewed and revised, reaffirmed, or withdrawn at least every five years. Sometimes a one-time extension of up to two years will be added to this review cycle. This publication will no longer be in effect five years after its publication date as an operative API standard or, where an extension has been granted, upon republication. Status of the publication can be ascertained from API Measurement Coordination [telephone (202) 682-8000]. A catalog of API publications and materials is published annually and updated quarterly by API, 1220 L Street, N.W., Washington, D.C. 20005.

This document was produced under API standardization procedures that ensure appropriate notification and participation in the developmental process and is designated as an API standard. Questions concerning the interpretation of the content of this standard or comments and questions concerning the procedures under which this standard was developed should be directed in writing to the Stamdardization Manager, American Petroleum Institute, 1220 L Street, N.W., Washington, D.C. 20005. Requests for permission to reproduce or translate all or any part of the material published herein should also be addressed to the director.

API standards are published to facilitate the broad availability of proven, sound engineering and operating practices. These standards are not intended to obviate the need for applying sound engineering judgment regarding when and where these standards should be utilized. The formulation and publication of API standards is not intended in any way to inhibit anyone from using any other practices.

Any manufacturer marking equipment or materials in conformance with the marking requirements of an API standard is solely responsible for complying with all the applicable requirements of that standard. API does not represent, warrant, or guarantee that such products do in fact conform to the applicable API standard.

All rights reserved. No part of this work may be reproduced, stored in a retrieval system, or transmitted by any means, electronic, mechanical, photocopying, recording, or otherwise, without prior written permission from the publisher. Contact the Publisher, API Publishing Services, 1220 L Street, N.W., Washington, D.C. 20005.

Copyright © 2000 American Petroleum Institute

Copyright © 2000 American Gas Association

Documents
Document Sharing Hub

Copyright American Petroleum Institute
Provided by IHS under license with API
No reproduction or networking permitted without license from IHS
Full document details: AGA Report 3-2 2006

Licensee=Shaw Group Inc/5948357001, User=Tagdiwala, Nihal
Not for Resale, 04/09/2008 00:40:51 MDT

FOREWORD

This foreword is for information and is not part of this standard.

Chapter 14, Section 3, Part 2, of the *Manual of Petroleum Measurement Standards* furnishes the specifications and installation requirements for the measurement of single-phase, homogeneous Newtonian fluids using concentric, square-edged, flange-tapped orifice meters. It provides the specifications for the construction and installation of orifice plates, meter tubes, and associated fittings. Users of pipe tap orifice meters are referred to Chapter 14, Section 3, Part 3, for specifications relevant to those meters. Pipe tap information for allocation measurement is contained in Chapter 20.1 "Allocation Measurement."

This standard has been developed through the cooperative efforts of many individuals from industry under the sponsorship of the American Petroleum Institute, the American Gas Association, the Gas Processors Association and Management Service, with contributions from the Chemical Manufacturers Association, the Canadian Gas Association, the Commission of the European Communities, Canada, Norway, Japan, and others.

The methods and criteria used to analyze data applied for this revision are described in the relevant white papers and GRI research reports (see references in Appendix 2-A).

API publications may be used by anyone desiring to do so. Every effort has been made by the Institute to ensure the accuracy and reliability of the data contained in them; however, the Institute makes no representation, warranty, or guarantee in connection with this publication and hereby expressly disclaims any liability or responsibility for loss or damage resulting from its use or for the violation of any federal, state, or municipal regulation with which this publication may conflict.

Suggested revisions are invited and should be submitted to Measurement Coordination, American Petroleum Institute, 1220 L Street, N.W., Washington, D.C. 20005.

--`,,```,,,,``,,,,,,,,,`,```,,,-`-`,,`,,`,`,,`---

Documents
Document Sharing Hub

Copyright American Petroleum Institute
Provided by IHS under license with API
No reproduction or networking permitted without license from IHS
Full document details: AGA Report 3-2 2006

Licensee=Shaw Group Inc/5948357001, User=Tagdiwala, Nihal
Not for Resale, 04/09/2008 00:40:51 MDT

ACKNOWLEDGMENTS

Over the duration of the revision process, several individuals have devoted time and technical expertise, however, special acknowledgments are due to a small group of people who have played a vital role in the completion of the document. This group includes:

Mr. Ronald Beaty (Chairman), Premier Measurement Services, Houston, Texas, USA
Dr. Wojciech Studzinski, NOVA Research & Technology Centre, Calgary, Alberta, Canada
Dr. Tom Morrow, Southwest Research Institute, San Antonio, Texas, USA
Mr. Paul La Nasa, CPL & Associates, Houston, Texas, USA
Dr. Umesh Karnik, NOVA Research & Technology Centre, Calgary, Alberta, Canada
Dr. Zaki Husain, Texaco, Inc., Bellaire, Texas, USA
Mr. Klaus Zanker, Daniel Flow Products, Inc., Houston, Texas, USA
Mr. Jim Gallagher, Savant Measurement Corporation, Kingwood, Texas, USA
Mr. Dale Goodson, Daniel Flow Products, Inc., Houston, Texas, USA
Mr. Paul Johnson, Savant Measurement Corporation, Kingwood, Texas, USA
Mr. Fred Van Orsdol, Williams Energy Group, Tulsa, Oklahoma, USA and
Mr. Stephen Stark, Stark & Associates Inc., Tulsa, Oklahoma, USA

During much of the corresponding time period, a similar effort occurred in Europe. Valuable liaison between the two efforts was provided by Dr. Michael Reader-Harris, NEL, Glasgow, UK, Mr. Jan Bosio, K-Lab, Haugesund, Norway, Dr. Bob Peters, Daniel Industries, UK, Dr. Berndt Harbrink, Ruhrgas, Dorsten, Germany and Mr. Geoff Robson, British Standards Institution, London, UK.

This project was possible due to the support of the American Petroleum Institute, Gas Processors Association and American Gas Association. Special thanks to the Gas Research Institute and NOVA Gas Transmission for funding the data collection at the GRI-MRF at SwRI, Daniel Industries and the Didsbury Test Facility operated by NOVA Research and Technology Centre.

This standard has benefited from the contributions from several White Paper Writing Groups, task forces and the editing and comments of various individuals. A list (by no means complete) of the individuals who participated in the revision process is listed below.

Mr. Ron Beaty, Premier Measurement Services, Houston, Texas, USA
Mr. Manny Garcia, American Petroleum Institute, Washington, D.C., USA
Mr. Brent Berry, Applied Automation Inc., Bartlesville, Oklahoma, USA
Mr. James Bowen, Instromet, Inc., Houston, Texas, USA
Mr. R. G. Brunner, Gas Processors Association, Tulsa, Oklahoma, USA
Ms. Sharon Buffington, Minerals Management, Herndon, Virginia, USA
Mr. Stan Canfield, Dynegy Midstream Services, L.P., Tulsa, Oklahoma, USA
Mr. David Crane, Crane Manufacturing, Inc., Tulsa, Oklahoma, USA
Mr. Ronald Dunegan, Perry Equipment Corp., Mineral Wells, Texas, USA
Mr. Wayne Fling, Jr., Flow Metrology, Tulsa, Oklahoma, USA
Mr. Chuck French, Gas Research Institute, Chicago, Illinois, USA
Mr. Steve Gage, Arkansas Wester Gas Company, Ozark, Arizona, USA
Mr. Jim Gallagher, Savant Measurement Corporation, Kingwood, Texas, USA
Mr. Dale Goodson, Daniel Flow Products, Inc., Houston, Texas, USA
Mr. John Gregor, AMETEK, Largo, Florida, USA
Mr. Ed Hickl, Union Carbide Corp., Houston, Texas, USA
Mr. Jim Hollingsworth, Shell Oil Products Co., Houston, Texas, USA
Dr. Zaki Husain, Texaco, Inc., Bellaire, Texas, USA
Dr. Emrys Jones, Chevron Petroleum Tech. Co., La Habra, California, USA
Dr. Umesh Karnik, NOVA Research & Technology Centre, Calgary, Alberta, Canada
Mr. Paul LaNasa, CPL & Associates, Houston, Texas, USA
Mr. Joe Landes, SPL, Houston, Texas, USA

Documents
Document Sharing Hub

Copyright American Petroleum Institute
Provided by IHS under license with API
No reproduction or networking permitted without license from IHS
Full document details: AGA Report 3-2 2006

Licensee=Shaw Group Inc/5948357001, User=Tagdiwala, Nihal
Not for Resale, 04/09/2008 00:40:51 MDT

Dr. George Mattingly, National Institute of Standards and Technology, Gaithersburg, USA
Mr. Günter Maurer, Barton Instrument Systems, City of Industry, California, USA
Mr. Kevin Moir, Michigan Consolidated Gas Company, Detroit, Michigan, USA
Mr. Don Morley, CIG Exploration, Inc., Houston, Texas, USA
Dr. Gerald Morrison, Texas A & M University, College Station, Texas, USA
Dr. Tom Morrow, Southwest Research Institute, San Antonio, Texas, USA
Mr. Henry Poelnitz, Southern Natural Gas Co., Birmingham, Alabama, USA
Mr. King Poon, GH Flow Automation, Houston, Texas, USA
Mr. Ali Quraishi, American Gas Association, Washington, D.C., USA
Mr. Rick Rans, Trans Canada Pipelines Ltd., Calgary, Alberta, Canada
Mr. Robert Rayburn, Texas Gas, Lafayette, Louisiana, USA
Mr. Bill Ryan, El Paso Natural Gas Co., Midland, Texas, USA
Mr. Lee Smith, Micro Motion, Boulder, Colorado, USA
Mr. Steve Stark, Stark & Associates Inc., Tulsa, Oklahoma, USA
Mr. Jean Stolz, Consultant, Marly, France
Mr. John Stuart, Pacific Gas and Electric Co., Walnut Creek, California, USA
Dr. Wojciech Studzinski, NOVA research & Technology Centre, Calgary, Alberta, Canada
Late Dr. Ray Teyssandier, Texaco, Inc., Bellaire, Texas, USA
Mr. Fred Van Orsdol, Williams Energy Group, Tulsa, Oklahoma, USA
Dr. Noriyuki Watanabe, Weights and Measures Training Institute, Tokyo, Japan
Mr. Wayne Wenger, Natural Gas Pipeline Co. of America, Joliet, Illinois, USA
Ms. Jane Williams, Oryx Energy Co., Dallas, Texas, USA
Mr. Rusty Woomer, Tennessee Gas Pipeline Co., Houston, Texas, USA
Mr. Harry Bean, Consultant, El Paso, Texas, USA
Mr. Jan Bosio, STATOIL, Haugesund, Norway
Mr. Steve Caldwell, CEESI, Nunn, Colorado, USA
Mr. Richard Estabrook, Bureau of Land Management, Ukiah, California, USA
Mr. Lee Hillburn, Turnbow Engineering, Bartlesville, Oklahoma, USA
Mr. Doug Morris, American Petroleum Institute, Washington, D.C., USA
Mr. Dan Acosta, Perry Equipment Corporation, Mineral Well, Texas, USA
Mr. Randy Austerman, Phillips Petroleum Co., Bartlesville, Oklahoma, USA
Mr. Ed Bowles, Southwest Research Institute, San Antonio, Texas, USA
Mr. Michael Cushing, Honeywell IAC, Fort Washington, Pennsylvania, USA
Mr. Robert Deboom, Micro Motion, Inc., Boulder, Colorado, USA
Mr. Terry Doucet, Ing, Foxboro Canada Inc., Dollard-des-Ormeaux, Quebec, Canada
Mr. R. D. Jones, Chevron USA Production Co., Lafayette, Louisiana, USA
Mr. Jim Keating, Duke Energy, Houston, Texas, USA
Mr. Eric Kelner, Southwest Research Institute, San Antonio, Texas, USA
Mr. Gil Kraemer, Precision Combustion, Inc., New Haven, Connecticut, USA
Ms. Angie Law, Kelly Instrument Machine, Inc., Texarkana, Texas, USA
Mr. Rick Ledesma, ANR Pipeline Co., Bourbonnais, Illinois, USA
Mr. Charles McNamara, Flow Measurement Co., Inc., Tulsa, Oklahoma, US
Mr. Leonard Meaux, Mobil Oil, The Woodlands, Texas, USA
Mr. James Milling, Control-Soft Enterprises, Katy, Texas, USA
Mr. Greg Milster, Thurmond-McGlothlin Co., Inc., Owasso, Oklahoma, USA
Mr. John Naber, Daniel Industries, Inc., Houston, Texas, USA
Mr. Warren Peterson, Kenonic Controls, Calgary, Canada.
Mr. John Phipps, Institute of Petroleum, London, England
Mr. John Roussel, Texaco Natural Gas, St. Rose, Louisiana, USA
Mr. Irvin Schwartzenburg, Fisher Controls, FAS Group, Marshalltown, Iowa
Mr. Steve Scott, Scott Equipment Co., Wheatridge, Colorado, USA
Mr. Walt Seidl, CEESI, Nunn, Colorado, USA
Mr. Pat Skweres, Dow Chemical Company, Freeport Texas, USA
Mr. Jerry Paul Smith, Williams Gas Pipeline—Transco, Houston, Texas, USA

Documents
Document Sharing Hub

Copyright American Petroleum Institute
Provided by IHS under license with API
No reproduction or networking permitted without license from IHS
Full document details: AGA Report 3-2 2006

Licensee=Shaw Group Inc/5948357001, User=Tagdiwala, Nihal
Not for Resale, 04/09/2008 00:40:51 MDT

Dr. Frank Ting, Chevron Petroleum Tech. Co., La Habra, California, USA
Ms. Lori. Traweek, American Gas Association, Washington, D.C., USA
Mr. Eric Ward, BP Exploration (Alaska) Inc., Anchorage, Alaska, USA
Mr. James N. Witte, Tennessee Gas Pipeline Company, Houston, Texas, USA
Mr. Ian Wood, Halliburton (U.K.) Ltd., Dyce, Aberdeen, Scotland
Mr. James P. Avioli, Williams Gas Pipeline—Transco, Houston, Texas, USA
Mr. Frank Brown, CMS Energy Corporation, Houston, Texas, USA
Mr. Jeryl M. Mohn, CMS Energy Corporation, Houston, Texas, USA
Mr. William R. Mazotti, Pacific Gas and Electric Company, San Francisco, California, USA
Mr. Daniel G. Harris, Columbia Gas Transmission, Charleston, West Virginia, USA
Mr. Jeffrey M. Dowdell, CNG Transmission Corporation, Clarksburg, West Virginia, USA
Mr. Robert D. MacLean, ANR Pipeline Company, Detroit, Michigan, USA
Mr. Michael T. Brown, TransCanada Transmission, Calgary, Alberta, Canada
Ms. Claire L. Becker-Castle, Southern California Gas Company, Los Angeles, California, USA
Mr. Donal H. Tucker, TXU Electric and Gas, Dallas Texas, USA
Mr. John A. Vassaux, Columbia Gas of Ohio, Inc., Columbus, Ohio, USA
Mr. Dannie R. Mercer, TXU Pipeline Services, Dallas, Texas, USA

Documents
Document Sharing Hub
Copyright American Petroleum Institute
Provided by IHS under license with API
No reproduction or networking permitted without license from IHS
Licensee=Shaw Group Inc/5948357001, User=Tagdiwala, Nihal
Not for Resale, 04/09/2008 00:40:51 MDT
Full document details: AGA Report 3-2 2006

CONTENTS

Page

2.1 CONSTRUCTION AND INSTALLATION REQUIREMENTS 1

2.2 SYMBOLS/NOMENCLATURE 1

2.3 DEFINITIONS 2
- 2.3.1 Primary Element 2
- 2.3.2 Pressure Measurement 3
- 2.3.3 Temperature Measurement (T_f, T_m, T_r) 4
- 2.3.4 Roughness Average (R_a) 4

2.4 ORIFICE PLATE SPECIFICATIONS 4
- 2.4.1 Orifice Plate Faces 4
- 2.4.2 Orifice Plate Bore Edge 4
- 2.4.3 Orifice Plate Bore Diameter (d_m, d_r) and Roundness 6
- 2.4.4 Orifice Plate Bore Thickness (e) 6
- 2.4.5 Orifice Plate Thickness (E) 7
- 2.4.6 Orifice Plate Bevel (q) 8

2.5 METER TUBE SPECIFICATIONS 10
- 2.5.1 Definition 10
- 2.5.2 Orifice Flanges 13
- 2.5.3 Orifice Fittings 13
- 2.5.4 Pressure Taps 14
- 2.5.5 Flow Conditioners 16

2.6 INSTALLATION REQUIREMENTS 18
- 2.6.1 General 18
- 2.6.2 Orifice Plate 18
- 2.6.3 Meter Tube 19
- 2.6.4 Acceptable Pulsation Environment 21
- 2.6.5 Thermometer Wells 22
- 2.6.6 Insulation 22

APPENDIX 2-A RESEARCH PROJECTS AND TESTS CONDUCTED BETWEEN 1922 AND 1999 27
APPENDIX 2-B ORIFICE METER INSPECTION GUIDELINES 41
APPENDIX 2-C SPECIFIC INSTALLATION CALIBRATION TEST 43
APPENDIX 2-D FLOW CONDITIONER PERFORMANCE TEST 45
APPENDIX 2-E MAXIMUM ALLOWABLE ORIFICE PLATE DIFFERENTIAL PRESSURE 49
APPENDIX 2-F GUIDELINES FOR USING HIGH DIFFERENTIAL PRESSURES FOR MEASURING NATURAL GAS WITH ORIFICE METERS 55
ADDENDUM 1 ERROR ANALYSIS EXAMPLE 65
ADDENDUM 2 EXPANDED DATA FOR 316 STAINLESS STEEL SIMPLY-SUPPORTED ORIFICE PLATES 67

Documents
Document Sharing Hub

Copyright American Petroleum Institute
Provided by IHS under license with API
No reproduction or networking permitted without license from IHS
Full document details: AGA Report 3-2 2006

Licensee=Shaw Group Inc/5948357001, User=Tagdiwala, Nihal
Not for Resale, 04/09/2008 00:40:51 MDT

CONTENTS

Page

Figures
2-1—Symbols for Orifice Plate Dimensions 5
2-2a—Orifice Plate Departure from Flatness
(Measured at Edge of Orifice Bore and Within Inside Pipe Diameter) 5
2-2b—Alternative Method for Determination of Orifice Plate Departure from Flatness
(Departure from Flatness = $h_2 - h_1$) 5
2-2c—Maximum Orifice Plate Departure from Flatness 6
2-3—Allowable Variations in Pressure Tap Hole Location 15
2-4—1998 Uniform Concentric 19-Tube Bundle Flow Straightener 17
2-5—Eccentricity Measurements (Sample Method) 18
2-6—Orifice Meter Tube Layout for Flanged or Welded Inlet 21
2F.5-1—Models of Simply-supported Orifice Plate (a), and a Flange-held
(Clamped) Orifice Plate (b) Showing Plate Deflection 62

Tables
2-1—Roundness Tolerance for Orifice Plate Bore Diameter, d_m 7
2-2—Linear Coefficient of Thermal Expansion 7
2-3—Orifice Plate Thickness and Maximum Allowable Differential Pressure Based on
the Structural Limit 9
2-4—Example Meter Tube Internal Diameter—Roundness Tolerances
Within First Mean Meter Tube Diameter Upstream of Orifice Plate 12
2-5—Example Meter Tube Internal Diameter Roundness Tolerances
—All Upstream Meter Tube Individual Internal Diameter Measurements 12
2-6—Maximum Tolerance of Orifice Plate Bore Eccentricity (ε_x) in Inches 19
2-7—Orifice Meter Installation Requirements Without a Flow Conditioner 23
2-8a—Orifice Meter Installation Requirements With 1998 Uniform Concentric
19-Tube Bundle Flow Straightener for Meter Tube Upstream Length
of $17D_i \leq \text{UL} < 29D_i$ 24
2-8b—Orifice Meter Installation Requirements With 1998 Uniform Concentric
19-Tube Bundle Flow Straightener for Meter Tube Upstream Length
of $\text{UL} \geq 29D_i$ 25
2-E-1—Maximum Allowable Calculated Differential Pressure Across 304/316SS
Orifice Plate at 150°F 50
2-F.6-1—Coefficients for Contraction Coefficient Equation at Various
Diameter Ratios (β) 62
2-F.11-1—Maximum Allowable Differential Pressures for Commonly
Used Sizes of Simply Supported Orifice Fittings 64

Documents
Document Sharing Hub

Copyright American Petroleum Institute
Provided by IHS under license with API
No reproduction or networking permitted without license from IHS
Full document details: AGA Report 3-2 2006

Licensee=Shaw Group Inc/5948357001, User=Tagdiwala, Nihal
Not for Resale, 04/09/2008 00:40:51 MDT

Chapter 14—Natural Gas Fluids Measurement

Section 3—Concentric, Square-Edged Orifice Meters

PART 2—SPECIFICATION AND INSTALLATION REQUIREMENTS

2.1 Construction and Installation Requirements

This document outlines the various design parameters that must be considered when designing metering facilities using orifice meters. The mechanical tolerances found in this document encompass a wide range of orifice diameter ratios for which experimental results are available. In several sections of this document, tolerances for the mechanical specifications have been changed relative to previous editions. In particular, this revision includes a change to the installation requirements (meter tube lengths). This change reduces the uncertainty attributable to installation effects to a magnitude smaller than the uncertainty of the database supporting the Reader-Harris/Gallagher (RG) equation and, therefore, should not affect the uncertainty previously defined for that equation.

This document does not require upgrading existing installations. If the meter installations are not upgraded to meet this current standard, however, measurement bias errors may exist due to inadequate flow conditioning and upstream straight pipe lengths. The decision to upgrade an existing installation shall be at the discretion of the parties involved.

Use of the calculation procedures and techniques shown in the *Manual of Petroleum Measurement Standards*, Chapter 14, Section 3, Parts 1 and 3, with existing equipment is recommended, since these represent significant improvements over the previous methods. However, the uncertainty levels for flow measurement using existing equipment may be different from those quoted in Part 1.

Use of orifice meters at the extremes of their diameter ratio (β_r) ranges should be avoided whenever possible. Good metering design and practice tend to be somewhat conservative. This means that the use of the tightest tolerances in the mid-diameter ratio (β_r) ranges would have the highest probability of producing the best measurement. An indication of this is found in the section on uncertainty in Part 1.

This standard is based on β_r between 0.10 and 0.75. Minimum uncertainty of the orifice plate coefficient of discharge (C_d) is achieved with β_r between 0.2 and 0.6 and orifice bore diameters greater than or equal to 0.45 inch. Diameter ratios and orifice bore diameters outside of this range may be used; however, the user should consult the uncertainty section in Part 1 for limitations.

Achieving the best level of measurement uncertainty begins with, but is not limited to, proper design. Two other aspects of the measurement process must accompany the design effort; otherwise it is of little value. These aspects are the application of the metering system and the maintenance of the meters, neither of which is considered directly in this standard. These aspects cannot be governed by a single standard as they cover metering applications that can differ widely in flow rate, fluid type, and operational requirements. Therefore, the user must therefore determine the best meter selection for the application and the level of maintenance for the measurement system under consideration.

2.2 Symbols/Nomenclature

This standard reflects orifice meter application to fluid flow measurement with symbols in general technical use.

Symbol	Represented Quantity
a	Speed of sound
C_d	Orifice plate coefficient of discharge
$C_d\,(FT)$	Flange tap orifice plate coefficient of discharge
$\Delta C_d\,(FT)/C_d$	Percent difference between baseline C_d and installation effect C_d
d	Orifice plate bore diameter calculated at flowing temperature, T_f
d_m	Orifice plate bore diameter measured at temperature, T_m
d_r	Orifice plate bore diameter calculated at reference temperature, T_r
D	Meter tube internal diameter calculated at flowing temperature, T_f
D_i	Published meter tube internal pipe diameter
DL	Meter tube length downstream of orifice plate in multiples of published internal pipe diameters (see Figure 2-6)
D_m	Meter tube internal diameter measured at T_m
D_n	Nominal pipe diameter

Documents
Document Sharing Hub

Copyright American Petroleum Institute
Provided by IHS under license with API
No reproduction or networking permitted without license from IHS
Full document details: AGA Report 3-2 2006

Licensee=Shaw Group Inc/5948357001, User=Tagdiwala, Nihal
Not for Resale, 04/09/2008 00:40:51 MDT

D_r	Meter tube internal diameter calculated at reference temperature, T_r
e	Orifice plate bore thickness
E	Orifice plate thickness
f	Frequency
°F	Temperature, in degrees Fahrenheit
l	Recommended lengths of gauge line
NPS	Nominal Pipe Size
ΔP	Orifice plate differential pressure
ΔP_{avg}	Average orifice plate differential pressure
ΔP_{rms}	Root mean square of the fluctuating differential pressure
ΔP_t	Instantaneous orifice plate differential pressure
P_f	Static pressure of the fluid at the pressure tap
°R	Temperature, in degrees Rankine
R_a	Absolute roughness average
Re	Reynolds number
T_f	Temperature of fluid at flowing conditions
T_m	Temperature of the orifice plate and/or meter tube at time of diameter measurements
T_r	Reference temperature (68°F) of orifice plate bore diameter and/or meter tube internal diameter
UL	Meter tube length upstream of orifice plate in multiples of published internal pipe diameters (Figure 2-6)
UL1	UL – UL2
UL2	Meter tube length from flow conditioner exit to orifice plate in multiples of published internal pipe diameters
α	Linear coefficient of thermal expansion
α_1	Linear coefficient of thermal expansion of the orifice plate material
α_2	Linear coefficient of thermal expansion of the meter tube material
β	Ratio of orifice plate bore diameter to meter tube internal diameter (d/D) calculated at flowing temperature, T_f
β_m	Ratio of orifice plate bore diameter to meter tube internal diameter (d_m/D_m) calculated at temperature, T_m
β_r	Ratio of orifice plate bore diameter to meter tube internal diameter (d_r/D_r) calculated at reference temperature, T_r
ε	Orifice plate bore eccentricity
θ	Orifice plate bevel angle

2.3 Definitions

The definitions are given to emphasize the particular meaning of the terms as used in this standard.

2.3.1 PRIMARY ELEMENT

The primary element is defined as the orifice plate, the orifice plate holder with its associated differential pressure sensing taps, the meter tube, and flow conditioner, if used.

2.3.1.1 Orifice Plate

The orifice plate is defined as a thin square-edged plate with a machined circular bore, concentric with the meter tube ID, when installed.

2.3.1.2 Orifice Plate Bore Diameter (d, d_m, d_r)

The calculated orifice plate bore diameter (d) is the internal diameter of the orifice plate measuring aperture (bore) computed at flowing temperature (T_f), as specified in 1.6.2 in Part 1. The calculated orifice plate bore diameter (d) is used in the flow equation for the determination of flow rate.

The measured orifice plate bore diameter (d_m) is the measured internal diameter of the orifice plate measuring aperture at the temperature of the orifice plate (T_m) at the time of bore diameter measurements, determined as specified in 2.4.3.

The reference orifice plate bore diameter (d_r) is the internal diameter of the orifice plate measuring aperture at reference temperature (T_r), calculated as specified in 2.4.3. The reference orifice plate bore diameter is the certified or stamped orifice plate bore diameter.

Documents
Document Sharing Hub
Copyright American Petroleum Institute
Provided by IHS under license with API
No reproduction or networking permitted without license from IHS
Licensee=Shaw Group Inc/5948357001, User=Tagdiwala, Nihal
Not for Resale, 04/09/2008 00:40:51 MDT
Full document details: AGA Report 3-2 2006

2.3.1.3 Orifice Plate Holder

The orifice plate holder is defined as a pressure containing piping element, such as a set of orifice flanges or an orifice fitting, used to contain and position the orifice plate in the piping system.

2.3.1.4 Meter Tube

The meter tube is defined as the straight sections of pipe, including all segments that are integral to the orifice plate holder, upstream and downstream of the orifice plate, as specified in 2.5.1.

2.3.1.5 Meter Tube Internal Diameter (D, D_i, D_m, D_r)

The calculated meter tube internal diameter (D) is the inside diameter of the upstream section of the meter tube computed at flowing temperature (T_f), as specified in 1.6.3 of Part 1. The calculated meter tube internal diameter (D) is used in the diameter ratio and Reynolds number equations.

The published meter tube internal diameter (D_i) is the inside diameter as published in standard handbooks for engineers. This internal diameter is used for determining the required meter run length in Tables 2-7 and 2-8.

The measured meter tube internal diameter (D_m) is the average inside diameter of the upstream section of the meter tube measured 1 inch upstream of the adjacent face of the orifice plate and at the temperature of the meter tube (T_m) at the time of internal diameter measurements, as specified in 2.5.1.2.

The reference meter tube internal diameter (D_r) is the inside diameter of the upstream section of the meter tube calculated at the reference temperature (T_r), as specified in 2.5.1.2. The reference meter tube internal diameter is the certified meter tube internal diameter.

2.3.1.6 Diameter Ratio (β, β_m, β_r)

The diameter ratio (β) is defined as the calculated orifice plate bore diameter (d) divided by the calculated meter tube internal diameter (D).

The diameter ratio (β_m) is defined as the measured orifice plate bore diameter (d_m) divided by the measured meter tube internal diameter (D_m).

The diameter ratio (β_r) is defined as the reference orifice plate bore diameter (d_r) divided by the reference meter tube internal diameter (D_r).

2.3.1.7 Flow Conditioners

Flow conditioners can be classified into two categories: straighteners or isolating flow conditioners.

Flow straighteners are devices that effectively remove or reduce the swirl component of a flowing stream, but may have limited ability to produce the flow conditions necessary to accurately replicate the orifice plate coefficient of discharge database values.

Isolating flow conditioners are devices that effectively remove the swirl component from the flowing stream while redistributing the stream to produce the flow conditions that accurately replicate the orifice plate coefficient of discharge database values.

2.3.2 PRESSURE MEASUREMENT

2.3.2.1 Tap Hole

A tap hole is a hole drilled radially in the wall of the meter tube or through the orifice fitting and perpendicular to the centerline of the meter tube or orifice plate holder, the inside edge of which is flush and without any burrs.

2.3.2.2 Flange Taps

Flange taps are a pair of tap holes positioned as follows:

a. the upstream tap center is located 1 inch upstream of the nearest plate face,
b. the downstream tap center is located 1 inch downstream of the nearest plate face,
c. the upstream and downstream taps must be in the same radial position.

Documents
Document Sharing Hub

Copyright American Petroleum Institute
Provided by IHS under license with API
No reproduction or networking permitted without license from IHS
Full document details: AGA Report 3-2 2006

Licensee=Shaw Group Inc/5948357001, User=Tagdiwala, Nihal
Not for Resale, 04/09/2008 00:40:51 MDT

2.3.2.3 Differential Pressure (ΔP, ΔP_{avg}, ΔP_{rms}, ΔP_t)

The differential pressure (ΔP) is the static pressure difference measured between the upstream and the downstream flange taps.

The average differential pressure (ΔP_{avg}) is a time mean of the static pressure difference measured between the upstream and downstream flange taps.

The instantaneous differential pressure (ΔP_t) is a single measurement of ΔP at any instance in time.

The root mean square differential pressure (ΔP_{rms})is the square root of the sum of squares of the difference between the instantaneous differential pressure (ΔP_t)and time mean differential (ΔP_{avg}).

2.3.3 TEMPERATURE MEASUREMENT (T_f, T_m, T_r)

The temperature (T_f) is the flowing fluid temperature measured at the designated location, as specified in 2.6.5.

In flow measurement, the temperature sensing device is inserted in the flowing stream to obtain the flowing temperature. However, if the fluid velocity is higher than 25% of the fluid sound speed at the point of measurement, corrections for the increase in temperature due to dynamic effects will have to be applied. Care should be taken to ensure that the temperature sensing elements are coupled to the flowing stream and not to the steel in the meter tube. This practice is recommended for all orifice meter installations. The sensed temperature is assumed to be the static temperature of the flowing fluid.

The temperature (T_m) is the measured temperature of the orifice plate and/or the meter tube at the time of the diameter measurements, as specified in 2.4.3 and 2.5.1.2.

The temperature (T_r) is the reference temperature used to determine the reference orifice plate bore diameter (d_r) and/or the reference internal meter tube diameter (D_r), as specified in 2.4.3 and 2.5.1.2.

2.3.4 ROUGHNESS AVERAGE (R_a)

The roughness average (R_a) used in this standard is that given in ANSI B46.1, and is "the arithmetic average of the absolute values of the measured profile height deviation taken within the sampling length and measured from the graphical centerline" of the surface profile.

2.4 Orifice Plate Specifications

The symbols for the orifice plate dimensions are shown in Figure 2-1.

2.4.1 ORIFICE PLATE FACES

The upstream and downstream faces of the orifice plate shall be flat. Deviations from flatness on the orifice plate of less than or equal to 1% of dam height (that is, 0.010 inch per inch of dam height) under nonflowing conditions are allowed. The dam height can be calculated from the formula $(D_m - d_m)/2$. This criterion for flatness applies to any two points on the orifice plate within the dimensions of the inside diameter of the pipe. The departure from flatness is illustrated in Figures 2-2a, 2-2b and 2-2c.

The surface roughness of the upstream and downstream faces of the orifice plate shall have no abrasions or scratches visible to the naked eye that exceed 50 microinches R_a.

The orifice plate surface roughness may be verified by using an electronic-averaging-type surface roughness instrument with a cutoff value of not less than 0.03 inch. Other surface roughness devices (for example, a visual comparator) are acceptable for determining orifice plate surface roughness if the same repeatability and reproducibility as those of the electronic-averaging-type surface roughness instrument can be demonstrated.

Due care shall be exercised to keep the plate clean and free from accumulation of dirt, ice, grit, grease, oil, free liquid and other extraneous materials, to the extent feasible, by instituting a regular inspection schedule (daily, weekly, monthly, quarterly, etc., depending on the service conditions). Damage and/or accumulation of extraneous materials on the orifice plate may result in a greater uncertainty for the orifice plate coefficient of discharge [C_d (FT)]. After any inspection of the plate, it shall be thoroughly cleaned (free from accumulations as stated above) prior to being placed back in service.

2.4.2 ORIFICE PLATE BORE EDGE

The upstream edge of the orifice plate bore shall be square and sharp. The orifice plate bore edge is considered too dull for accurate flow measurement if the upstream edge reflects a beam of light when viewed without magnification or if the upstream edge shows a beam of light when checked with an orifice edge gauge.

Documents
Document Sharing Hub

Copyright American Petroleum Institute
Provided by IHS under license with API
No reproduction or networking permitted without license from IHS
Full document details: AGA Report 3-2 2006

Licensee=Shaw Group Inc/5948357001, User=Tagdiwala, Nihal
Not for Resale, 04/09/2008 00:40:51 MDT

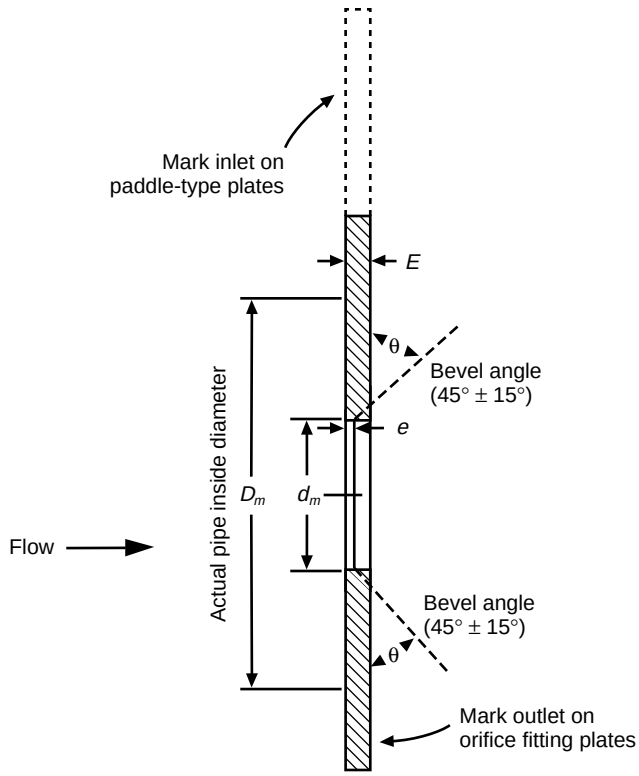

Figure 2-1—Symbols for Orifice Plate Dimensions

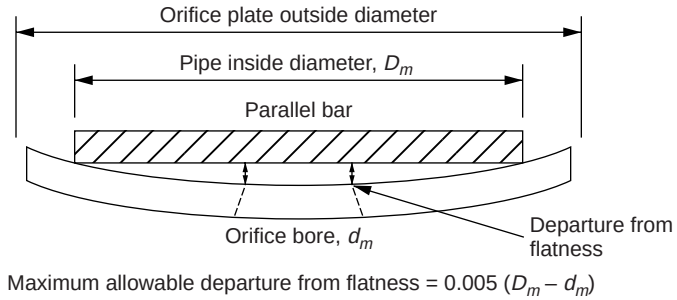

Figure 2-2a—Orifice Plate Departure from Flatness
(Measured at Edge of Orifice Bore and Within Inside Pipe Diameter)

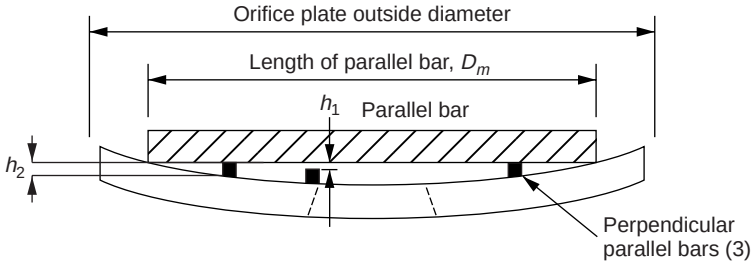

Figure 2-2b—Alternative Method for Determination of Orifice Plate Departure from Flatness
(Departure from Flatness = $h_2 - h_1$)

Documents
Document Sharing Hub

Copyright American Petroleum Institute
Provided by IHS under license with API
No reproduction or networking permitted without license from IHS
Full document details: AGA Report 3-2 2006

Licensee=Shaw Group Inc/5948357001, User=Tagdiwala, Nihal
Not for Resale, 04/09/2008 00:40:51 MDT

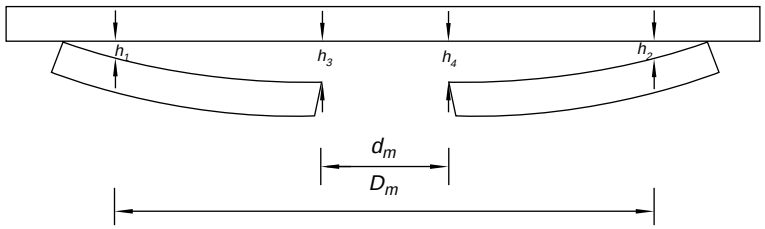

$$\text{Maximum departure from flatness} = \frac{[h_3 + h_4] - [h_1 + h_2]}{2}$$

Figure 2-2c—Maximum Orifice Plate Departure from Flatness

An estimation of suitable sharpness can be made by comparing the orifice plate bore edge with the bore edge of a properly sharp reference orifice plate of the same nominal diameter. The orifice plate bore edge being evaluated should feel and look the same as the edge of the reference orifice plate.

The upstream and downstream edges of the orifice plate bore shall be free from defects visible to the naked eye, such as flat spots, feathered texture, roughness, burrs, bumps, nicks, and notches.

If there is any doubt about whether the edge has sufficient quality for accurate metering, the orifice plate should be replaced.

2.4.3 ORIFICE PLATE BORE DIAMETER (d_m, d_r) and ROUNDNESS

The measured orifice bore diameter (d_m) is defined as the mean (arithmetic average) of four or more evenly spaced diameter measurements at the inlet edge. None of the four or more diameter measurements may vary from the mean value by more than the tolerances given in Table 2-1. The orifice plate temperature shall be recorded at the time the bore diameter measurements are made. These measurements shall be made under thermally stable conditions; i.e., during the measurement, the temperature should be constant within ± 1°F (± 0.5°C).

The orifice plate bore diameter (d_r) is defined as the calculated reference diameter at reference temperature (T_r) and can be determined using the following equation:

$$d_r = d_m[1 + \alpha_1(T_r - T_m)] \tag{2.1}$$

where

α_1 = linear coefficient of thermal expansion for the orifice plate material (see Table 2-2),

d_r = orifice plate bore diameter calculated at reference temperature (T_r),

d_m = orifice plate bore diameter measured at T_m,

T_m = temperature of the orifice plate at time of diameter measurements,

T_r = reference temperature of the orifice plate bore diameter.

Note: α_1, T_m, and T_r must be in consistent units. For the purpose of this standard, T_r is assumed to be 68°F.

The orifice plate bore diameter (d_r) calculated at T_r is the reference diameter used to calculate the bore diameter (d) at flowing conditions, as specified in Part 1.

2.4.4 ORIFICE PLATE BORE THICKNESS (e)

The inside surface of the orifice plate bore shall be in the form of a constant-diameter cylinder having no defects, such as grooves, ridges, pits, or lumps, visible to the naked eye. The length of the cylinder is the orifice plate bore thickness (e).

The minimum allowable orifice plate bore thickness (e) is defined by $e \geq 0.01d_r$ or $e > 0.005$ inch, whichever is larger.

The maximum allowable value for the orifice plate bore thickness (e) is defined by $e \leq 0.02D_r$ or $e \leq 0.125d_r$, whichever is smaller, but e shall not be greater than the maximum allowable orifice plate thickness (E).

Documents
Document Sharing Hub
Copyright American Petroleum Institute
Provided by IHS under license with API
No reproduction or networking permitted without license from IHS
Full document details: AGA Report 3-2 2006
Licensee=Shaw Group Inc/5948357001, User=Tagdiwala, Nihal
Not for Resale, 04/09/2008 00:40:51 MDT

Table 2-1—Roundness Tolerance for Orifice Plate Bore Diameter, d_m

Office Bore Diameter, d_m (inches)	Tolerance (± inches)
≤0.250[a]	0.0003
0.251 – 0.375[a]	0.0004
0.376 – 0.500[a]	0.0005
0.501 – 0.625	0.0005
0.626 – 0.750	0.0005
0.751 – 0.875	0.0005
0.876 – 1.000	0.0005
>1.000	0.0005 inch per inch of diameter

Note: [a]Use of diameters below 0.45 inch is not prohibited, but may result in uncertainties greater than those specified in Chapter 14, Section 3, Part 1.

Table 2-2—Linear Coefficient of Thermal Expansion

Material	Linear Coefficient of Thermal Expansion, α [U.S. Units (in./in. °F)]
Type 304 and 316 stainless steel[a]	0.00000925
Monel[a]	0.00000795
Carbon Steel[b]	0.00000620

Note: For flowing temperature conditions other than those stated in footnotes a and b and for other materials, refer to the American Society for Metals, *Metals Handbook*.
[a]For flowing conditions between – 100°F and + 300°F, ref. ASME PTC 19.5.
[b]For flowing conditions between – 7°F and + 154°F, ref. *API MPMS* Chapter 12, Section 2.

When the orifice plate thickness (E) exceeds the orifice bore thickness (e), a bevel (see 2.4.6) is required on the downstream side of the orifice bore.

Note: Existing orifice plates, whose edge thickness meets the value defined by $e < 0.033D_m$, need not be rebeveled unless reconditioning is required for other reasons.

For ease in machining, the next smaller values of e, in multiples of 0.03125 (1⁄32 inch), may be used.

Orifice plate bores that demonstrate any convergence from inlet to outlet are unacceptable.

Bi-directional flow through an orifice meter tube requires a specially configured meter tube and the use of an unbeveled orifice plate. Use of an unbeveled orifice plate with bore thickness (e) that exceeds the limits specified in this table is outside of the scope of this standard.

2.4.5 ORIFICE PLATE THICKNESS (*E*)

The minimum, maximum, and recommended values of orifice plate thickness (E) for Types 304 and 316 stainless steel orifice plates are given in Table 2-3.

Maximum allowable differential pressures for the recommended orifice plate thicknesses in Table 2-3 are for operating temperatures not exceeding 150°F. For operating conditions, orifice diameter ratios, meter tube sizes, and orifice plate thicknesses not covered in Table 2-3, see the tables found in Appendix 2-E. If a specific application is not covered by Table 2-3 or Appendix 2-E, the orifice plate and/or holding device manufacturer should be contacted for specific information on deflection (see 2.4.1 and Appendix 2-F—AGA Engineering Technical Note—High Differential Pressure Across Orifice Fittings) for a given diameter ratio, temperature, orifice plate material, orifice plate holder, and differential pressure.

Documents
Document Sharing Hub

Copyright American Petroleum Institute
Provided by IHS under license with API
No reproduction or networking permitted without license from IHS
Full document details: AGA Report 3-2 2006

Licensee=Shaw Group Inc/5948357001, User=Tagdiwala, Nihal
Not for Resale, 04/09/2008 00:40:51 MDT

The use of an orifice plate thickness other than the recommended thickness is acceptable in either new or existing orifice plate holding devices as long as the thickness is within the maximum and minimum range shown in Table 2-3; and the orifice plate eccentricity, bore thickness, differential pressure tap hole, and expansion-factor pressure-ratio tolerances and limits are satisfied.

For incompressible fluids, the maximum differential pressure across the plate is limited by the structural integrity of the fitting design. The maximum differential pressure should be limited to those shown in Table 2-3 and Appendix 2-E. If the maximum differential pressure is to exceed the limits specified, the manufacturer should be consulted for allowable maximum pressure for the fitting design. In addition, the flowing conditions downstream of the orifice plate must remain above the local vapor pressure of the flowing fluid.

Orifice fitting manufacturers should be consulted to determine the maximum allowable differential pressure during the changing of orifice plates under flowing conditions. The high forces associated with using high differential pressures may make it difficult to remove the plate, and may possibly result in damage to the orifice plate or fitting.

The use of high differential pressures ($\Delta P/P_f > 0.7$ inch of water/psia, where the ΔP is in inches of water at 68°F and P_f is in psia) will result in expansion factor uncertainties in excess of 0.1% (See 1.12.4.2 of Part 1).

Operators should be aware, for a given orifice plate size, that when there is a wide swing from high to low flows, significant measurement errors will occur during the low-flow period if the orifice plate remains unchanged. Generally, operation between 10% and 90% of the calibrated differential span is considered good practice. Rangeability can also be increased using today's digital (electronic) transmitters. The effects on the accuracy of transducers and/or transmitters used for wide range should be evaluated versus savings on installation cost.

For the full range of orifice plate thicknesses, the maximum allowable orifice plate differential pressure can be obtained from Appendix 2-E.

Higher differential pressures will result in higher meter-run gas velocities and higher permanent pressure losses. It is recommended that the gas velocities be evaluated on a individual installation basis for such things as noise, erosion, and thermowell vibration. The meter run velocity is dependent on several different factors, and each individual user will have different practices and limits on velocity. Therefore, the allowable maximum differential pressures, shown in Table 2-3, do not consider meter-run gas velocity.

2.4.5.1 Permanent Pressure Drop

The permanent pressure drop is significant because the energy has been lost to transport the fluid through the pipeline. Several technical books list the permanent pressure loss versus β ratio for the concentric, square-edged, flange-tapped orifice meter.

$$\text{The permanent pressure loss} \approx \Delta P(1 - \beta^2)$$

Below is a table of these approximate values:

β	Losses as a % of ΔP
0.20	95
0.30	90
0.40	85
0.50	75
0.60	65
0.70	50
0.75	45

Examples:

a. If the user chooses to use a β of 0.30 at a ΔP of 400 inches of H_2O, then the permanent pressure loss would be approximately 90% of 400 inches of H_2O, which is about 360 inches of H_2O (about 13 psi).

b. If the user chooses to use a β of 0.50 at a ΔP of 100 inches of H_2O, then the permanent pressure loss would be approximately 75% of 100 inches of H_2O, which is about 75 inches of H_2O (about 3 psi).

2.4.6 ORIFICE PLATE BEVEL (θ)

The plate bevel angle (θ) is defined as the angle between the bevel and the downstream face of the plate. The allowable value for the plate bevel angle (θ) is 45 degrees ± 15 degrees.

The surface of the plate bevel shall have no defects visible to the naked eye, such as grooves, ridges, pits, or lumps.

If a bevel is required, its minimum dimension, (*E-e*), measured along the axis of the bore shall not be less than 0.0625 (1/16) inch.

Documents
Document Sharing Hub
Copyright American Petroleum Institute
Provided by IHS under license with API
No reproduction or networking permitted without license from IHS
Licensee=Shaw Group Inc/5948357001, User=Tagdiwala, Nihal
Not for Resale, 04/09/2008 00:40:51 MDT
Full document details: AGA Report 3-2 2006

Table 2-3—Orifice Plate Thickness and Maximum Allowable Differential Pressure Based on the Structural Limit

Nominal Pipe Size (NPS) (inches)	Published Inside Pipe Diameter (inches)	Orifice Plate Thickness, *E* (inches) Minimum	Maximum	Recommended	Maximum Allowable ΔP("H_20) Orifice Fitting	Maximum Allowable ΔP("H_20) Orifice Flanges
2	1.687	0.115	0.130	0.125	1000	1000
	1.939	0.115	0.130	0.125	1000	1000
	2.067	0.115	0.130	0.125	1000	1000
3	2.300	0.115	0.130	0.125	1000	1000
	2.624	0.115	0.130	0.125	1000	1000
	2.900	0.115	0.130	0.125	1000	1000
	3.068	0.115	0.130	0.125	1000	1000
4	3.152	0.115	0.130	0.125	1000	1000
	3.438	0.115	0.130	0.125	1000	1000
	3.826	0.115	0.130	0.125	1000	1000
	4.026	0.115	0.130	0.125	1000	1000
6	4.897	0.115	0.163	0.125	345	1000
	5.187	0.115	0.163	0.125	345	1000
	5.761	0.115	0.192	0.125	345	1000
	6.065	0.115	0.192	0.125	345	1000
8	7.625	0.115	0.254	0.250	1000	1000
	7.981	0.115	0.319	0.250	1000	1000
	8.071	0.115	0.319	0.250	1000	1000
10	9.562	0.115	0.319	0.250	570	1000
	10.020	0.115	0.319	0.250	570	1000
	10.136	0.115	0.319	0.250	570	1000
12	11.374	0.175	0.379	0.250	285	1000
	11.938	0.175	0.398	0.250	285	1000
	12.090	0.175	0.398	0.250	285	1000
16	14.688	0.175	0.490	0.375	465	1000
	15.000	0.175	0.500	0.375	465	1000
	15.025	0.175	0.500	0.375	465	1000
20	18.812	0.240	0.505	0.375	235	1000
	19.000	0.240	0.505	0.375	235	1000
	19.250	0.240	0.505	0.375	235	1000
24	22.624	0.240	0.505	0.500	360	1000
	23.000	0.240	0.562	0.500	360	1000
	23.250	0.240	0.562	0.500	360	1000
30	28.750	0.370	0.562	0.500	180	1000
	29.000	0.370	0.578	0.500	180	1000
	29.250	0.370	0.578	0.500	180	1000

Notes:

1. Maximum allowable differential pressure is limited to 1,000 inches of water column, which is the limit of the coefficient of discharge database. For further details on the limit of maximum allowable differential pressure, please refer to the text in 2.4.5.
2. Maximum allowable differential pressure is calculated for worst-case diameter ratio (typically β = 0.55 – 0.65). Other diameter ratios may be able to go to higher differential pressures (see Appendix 2-E).
3. The maximum differential pressure applies to stainless steel plates at a maximum temperature of 150º F, and for the recommended plate thickness.
4. Maximum allowable differential pressure for other plate thicknesses refer to Appendix 2-E.
5. For single- or dual-chamber fittings, the orifice plate seal ring was assumed to deflect under axisymmetric conditions without plastic deformation. As such, the effect on the seal ring was not investigated.
6. Especially at very high differential pressures, the user should carefully consider the associated thermodynamic effects, such as temperature changes resulting from the Joule-Thompson effect as the stream passes through the orifice, and the limits on $\Delta P/P_f$, in particular, at low pressures. The sudden reduction of pressure will result in temperature and density changes.

Documents
Document Sharing Hub

Copyright American Petroleum Institute
Provided by IHS under license with API
No reproduction or networking permitted without license from IHS
Full document details: AGA Report 3-2 2006

Licensee=Shaw Group Inc/5948357001, User=Tagdiwala, Nihal
Not for Resale, 04/09/2008 00:40:51 MDT

2.5 Meter Tube Specifications

2.5.1 DEFINITION

The meter tube is defined as the straight upstream pipe of the same diameter length UL of the installation Tables 2-7 and 2-8, (see Figure 2-6), including the flow straightener/conditioner, if used; the orifice plate holder; and the similar downstream pipe (length DL of the installation Tables 2-7 and 2-8, see Figure 2-6) beyond the orifice plate. The upstream section of the meter tube is defined as the length of straight pipe extending from the upstream face of the orifice plate to the nearest upstream change in cross-sectional area (not including flanged fittings allowed in the standard) or change in the axis of the pipe centerline.

The length of the upstream and downstream pipe sections is addressed in 2.6.3.1. The tolerances for the diameter and the restrictions for the inside surface of the meter tube are specified in 2.5.1.1 through 2.5.1.3.

There shall be no pipe connections within the specified upstream and downstream meter tube sections other than the pressure taps specified in 2.5.4 (and pipe taps as defined in Appendix 3-D of Part 3); temperature probes specified in 2.6.5; flow conditioner attachments (either flanged or in-line); orifice plate holders (welded or flanged on the downstream or upstream end as specified in section 2.5.3.2); and in-line meter tube flanges necessary to connect sections of the meter tube. Any downstream flange connection or weld must be at least 2 inches away from the downstream face of the orifice plate. Any downstream weld within 0.5*D* or 2 inches from the downstream face of the orifice plate must be ground and/or machined to meet the downstream out-of-roundness and the inside surface roughness requirements specified in 2.5.1.3.2 and 2.5.1.1, respectively. For any downstream flange connection within 0.5*D* or 2 inches, care must be taken to avoid any protrusion of the gasket into the line. The closest an in-line meter tube flange can come to the orifice plate, in the upstream meter tube section, should be the designated flow conditioner location, or $10D_i$ for meter tubes without flow conditioner (not including flanged fittings allowed in the standard). All flanges and flange attachments within the designated meter tube lengths shall meet all meter tube requirements contained in 2.5.1.1 through 2.5.1.4.

2.5.1.1 Inside Surface

The sections of the meter tube to which the orifice plate holder is attached, or the adjacent pipe sections that constitute part of the meter tube, as defined in 2.5.1, shall comply with 2.5.1.1.1 through 2.5.1.1.3. However, due to the increased upstream meter tube length requirements of Tables 2-7 and 2-8, and in keeping with the coefficient of discharge database lengths, the upstream meter tube section required to comply with 2.5.1.1.1 through 2.5.1.1.3 shall be limited to the lengths shown in Tables 2-7 and 2-8, or 17 published internal pipe diameters, whichever is less. The piping roughness R_a upstream of this length should not be greater than 600 µin.

2.5.1.1.1 The internal surface roughness of the meter tube should be measured at approximately the same internal axial locations as those used to determine and verify the meter tube internal diameter (see 2.5.1.2). The R_a values specified in the items below are the arithmetic average roughness obtained using an electronic-averaging-type surface roughness instrument with a cut-off value of not less than 0.03 inch. Other surface roughness devices are acceptable for determining meter-tube surface roughness if the same repeatability and reproducibility as those of the electronic-averaging-type surface roughness instrument can be demonstrated. A minimum of four roughness measurements shall be made.

The mean (arithmetic average) of these four or more roughness measurements is defined as the meter tube internal surface roughness.

For meter runs with nominal diameters of 12 inches or smaller:

a. The maximum meter-tube roughness shall not exceed 300 microinches (µinches) R_a if the diameter ratios (β_r) are equal to or less than 0.6.
b. The maximum meter-tube roughness shall not exceed 250 µinches R_a if the diameter ratios (β_r) are greater than or equal to 0.6.
c. The minimum roughness shall not be less than 34 µinches for all diameter ratios.

For meter runs with nominal diameters larger than 12 inches:

a. The maximum meter-tube roughness shall not exceed 600 µinches R_a if the diameter ratios (β_r) are equal to or less than 0.6.
b. The maximum meter-tube roughness shall not exceed 500 µinches R_a if the diameter ratios (β_r) are greater than or equal to 0.6.
c. The minimum meter-tube roughness shall not be less than 34 µinches for all diameter ratios.

Note: The use of lower diameter ratios (β_r) reduces the effect of pipe roughness on uncertainty.

Carefully selected smooth commercial pipe may be used. To improve smoothness within the meter tube, the inside pipe walls may be machined, ground, or coated to meet the required specifications.

Documents
Document Sharing Hub

Copyright American Petroleum Institute
Provided by IHS under license with API
No reproduction or networking permitted without license from IHS
Full document details: AGA Report 3-2 2006

Licensee=Shaw Group Inc/5948357001, User=Tagdiwala, Nihal
Not for Resale, 04/09/2008 00:40:51 MDT

2.5.1.1.2 Irregularities such as grooves, scoring, or ridges resulting from seams, welding distortion, offsets, and the like, that affect the inside diameter by more than the tolerances in 2.5.1.3, shall not be permitted. The existence of pits in the surface of the meter tube, although undesirable, is allowed provided their individual measurements do not exceed the surface roughness and/or diameter tolerance requirements of the meter tube and do not compromise the meter tube's pressure integrity. When these tolerances are exceeded, the irregularities must be corrected.

2.5.1.1.3 Due care shall be exercised to keep the meter tube interior clean and free from accumulation of dirt, ice, grit, grease, oil, free liquid and other extraneous materials, to the extent feasible. Damage and/or accumulation of extraneous materials in the meter tube may result in a greater uncertainty for the orifice plate coefficient of discharge [$C_d(FT)$].

2.5.1.2 Meter Tube Diameter (D_m, D_r)

The measured internal diameter of the meter tube (D_m) shall be determined as specified in 2.5.1.2.1 through 2.5.1.2.5.

2.5.1.2.1 A minimum of four equally spaced individual internal diameter measurements shall be made in a plane 1 inch upstream from the upstream face of the orifice plate. The mean (arithmetic average) of these four or more individual measurements is defined as the measured meter tube internal diameter (D_m).

2.5.1.2.2 Individual check measurements of the internal diameter of the upstream section (UL in Tables 2-7 and 2-8) of the meter tube (excluding the orifice plate gasket or sealing device diameter) shall be made at a minimum of two additional cross-sections. The actual locations of the individual internal diameter check measurements, around the circumference and along the axis of the meter tube, are not specified. These individual checks should be made at points that will indicate the maximum and minimum dimensions of the internal diameter of the meter tube's upstream section.

One of these individual check measurements should be made in a region at least two pipe diameters from the face of the orifice plate, or past the orifice plate holder weld or flange, whichever is the greater distance. Other individual measurements should be made at selected points within the UL dimension.

Individual check measurements are used to verify the uniformity of the internal diameter of the upstream section of the meter tube (see 2.5.1.3), but do not become a part of the determination of the mean meter tube internal diameter.

2.5.1.2.3 Individual check measurements of the meter tube internal diameter (D_m) shall be made in the downstream section of the meter tube in a plane 1-inch downstream from the downstream face of the orifice plate (see 2.5.1.3).

Additional individual check measurements of the internal diameter (D_m) (excluding the orifice plate gasket or sealing device diameter), shall be made at a minimum of two other cross-sections in the downstream section of the meter tube (see 2.5.1.3), similar to the measurements specified in 2.5.1.2.2.

2.5.1.2.4 Meter tube internal diameters are not limited to published nominal inside pipe diameters. All applicable regulations and piping codes must be followed.

2.5.1.2.5 The meter tube temperature to the nearest degree Fahrenheit (0.5 degree Centigrade) should be recorded when the internal diameter measurements are made. These measurements shall be made under thermally stable conditions; i.e., during the measurement, temperature should be constant within 5°F (2.5°C).

The reference meter tube internal diameter (D_r) is defined as the calculated meter tube internal diameter at reference temperature (T_r), and can be determined using the following equation:

$$D_r = D_m[1 + \alpha_2(T_r - T_m)] \tag{2.2}$$

where

α_2 = linear coefficient of thermal expansion for the meter tube material (see Table 2-2),

D_m = meter tube internal diameter measured at temperature (T_m),

D_r = reference meter tube internal diameter calculated at reference temperature (T_r),

T_m = temperature of the meter tube at the time of the diameter measurements,

T_r = reference temperature of the meter tube internal diameter.

Documents
Document Sharing Hub
Copyright American Petroleum Institute
Provided by IHS under license with API
No reproduction or networking permitted without license from IHS
Licensee=Shaw Group Inc/5948357001, User=Tagdiwala, Nihal
Not for Resale, 04/09/2008 00:40:51 MDT
Full document details: AGA Report 3-2 2006

Note: α_2, T_m, and T_r must be in consistent units. For the purpose of this standard, T_r is assumed to be 68°F (20ºC).

The meter tube internal diameter (D_r) calculated at T_r is the diameter used to calculate the meter tube internal diameter, D, at flowing conditions, as specified in Part 1.

2.5.1.3 Tolerances and Restrictions

The tolerances for the diameter and the restrictions for the internal surface of the meter tube are specified in 2.5.1.1.1 through 2.5.1.3.3.

2.5.1.3.1 Meter Tube Internal Diameter Roundness Tolerance

2.5.1.3.1.1 Within the First Mean Meter Tube Diameter (D_m) Upstream of the Orifice Plate

The absolute value of the percentage difference between the measured meter tube internal diameter (D_m) and any individual diameter measurement within a distance of one meter tube diameter (D_m) on the upstream side of the orifice plate shall not exceed 0.25% of D_m. The measurement resolution shall be to the nearest thousandth of an inch (0.001 inch) or better.

$$\left|\frac{\langle \text{Any diameter within one } D_m\rangle - D_m}{D_m} \times 100\right| \le 0.25\% \tag{2.3}$$

An example of this situation is provided in Table 2-4. All measurements within one meter tube diameter upstream of the orifice plate face are within 0.25% of the 2.0695 mean.

Table 2-4—Example Meter Tube Internal Diameter—Roundness Tolerances Within First Mean Meter Tube Diameter Upstream of Orifice Plate

	Meter Tube Internal Diameter Measurements (inches)				
Position	A	B	C	D	Mean, D_m
1-inch upstream plate	2.0696	2.0694	2.0694	2.0696	2.0695
Within one D_m	2.0700	2.0676	2.0671	2.0655	N/A
% deviation from mean D_m	0.024%	0.092%	0.116%	0.193%	N/A

2.5.1.3.1.2 For All Upstream Meter Tube Individual Internal Diameter Measurements, Including Those Within One Meter Tube Diameter Upstream of the Orifice Plate

The percentage difference between the maximum measured individual internal diameter measurement and the minimum measured individual internal diameter measurement of all upstream meter tube individual internal diameter measurements, including those within the first meter tube diameter upstream of the orifice plate, shall not exceed 0.5% of D_m:

$$\frac{\text{Maximum diameter} - \text{Minimum diameter}}{D_m} \times 100 \le 0.5\% \tag{2.4}$$

An example of this situation is provided in Table 2-5.

Table 2-5—Example Meter Tube Internal Diameter Roundness Tolerances—All Upstream Meter Tube Individual Internal Diameter Measurements

	Meter Tube Internal Diameter Measurements (inches)				
Position	A	B	C	D	Mean, D_m
1-inch upstream plate	2.0696	2.0694	2.0694	2.0696	2.0695
Within one D_m	2.0700	2.0676	2.0671	2.0655	N/A
Upstream check measurement	2.0621	2.0620	2.0613	2.0601	N/A

Documents
Document Sharing Hub
Copyright American Petroleum Institute
Provided by IHS under license with API
No reproduction or networking permitted without license from IHS
Licensee=Shaw Group Inc/5948357001, User=Tagdiwala, Nihal
Not for Resale, 04/09/2008 00:40:51 MDT
Full document details: AGA Report 3-2 2006

The calculation to verify that the measurements meet the tolerance criterion is as follows:

$$\frac{2.0700 - 2.0655}{2.0695} \times 100 = 0.22\%$$

All upstream meter tube individual internal diameter measurements, including those within one meter tube diameter (D_m) upstream of the orifice plate are within 0.5% of D_m.

2.5.1.3.2 Internal Roundness Tolerance for the Downstream Section of Meter Tube

The absolute value of the percentage difference between the measured meter tube diameter (D_m) and any individual internal diameter on the downstream side shall not exceed 0.5% of D_m:

$$\left| \frac{(\text{Any downstream diameter}) - D_m}{D_m} \times 100 \right| \leq 0.5\% \tag{2.5}$$

2.5.1.3.3 General Meter Tube Restrictions

Abrupt changes of the inside meter tube surface (shoulders, offsets, ridges, welding seams, and the like) shall not exist in meter tubes, with the exception of those allowed in 2.5.1 and 2.5.5.

2.5.1.4 Orifice Plate Gasket or Sealing Device Recesses and Protrusions

The orifice plate gasket or sealing device tolerances and restrictions specified in 2.5.1.4.1 through 2.5.1.4.5 shall apply at locations immediately upstream and downstream of the orifice plate face.

2.5.1.4.1 Protrusions resulting from an orifice plate gasket or sealing device that extend into the pipe bore are not permitted.

2.5.1.4.2 A recess resulting from an orifice plate gasket or sealing device, of 0.25 inch or less in length, as measured parallel to the pipe axis, does not require recess depth restriction, diameter ratio (β_r) limitation, or additional uncertainty.

2.5.1.4.3 A recess resulting from an orifice plate gasket or sealing device, of more than 0.25 inch but less than or equal to 0.5 inch in axial length, does not require diameter ratio (β_r) limitation or additional uncertainty if the depth of the recess is within the limitations of 2.5.1.3 ($0.005D_m$).

2.5.1.4.4 All orifice plate sealing devices shall be of the same nominal inside pipe diameter (within the limits specified in 2.5.1.4.1 through 2.5.1.4.3) as the orifice plate holder in which they are used.

2.5.1.4.5 For recesses larger than those described in 2.5.1.4.2 and 2.5.1.4.3, additional uncertainty may be required.

2.5.2 ORIFICE FLANGES

Orifice flanges for orifice meter tube installations should be constructed and attached to the pipe so that all of the mechanical specifications in 2.5.1.1 and 2.5.1.4 are met.

Any distortion of the pipe resulting from welding the flange to the pipe shall be removed by machining or grinding to meet the limitations specified in 2.5.1.3.

2.5.3 ORIFICE FITTINGS

2.5.3.1 General

Orifice fittings represent a class of orifice holders that is widely used throughout the industry. With these devices, it is possible to reproduce the orifice coefficients defined by the equation in Part 1 within the same uncertainty limits as would be found for an orifice plate held between two flanges (the original test devices). To do this, these devices must be manufactured to the tolerances specified in this standard. With orifice fittings, however, some practical considerations should be recognized; some critical inspections that are unique to these devices should be performed. The following information is based on devices that were commonly known to exist at the time this standard was developed and may not cover innovations that have become commonly known since

AVA Documents
Document Sharing Hub
Copyright American Petroleum Institute
Provided by IHS under license with API
No reproduction or networking permitted without license from IHS
Licensee=Shaw Group Inc/5948357001, User=Tagdiwala, Nihal
Not for Resale, 04/09/2008 00:40:51 MDT
Full document details: AGA Report 3-2 2006

its publication. Such innovations may be deemed to be in accordance with this standard as long as they meet all tolerances contained herein.

2.5.3.2 Attachment to Pipe

When an upstream flanged orifice fitting is used, the mean inside diameter of the meter tube connected to the inlet side shall agree with the mean inside diameter of the fitting within the tolerance given in 2.5.1.3. When the fitting is installed, the inlet side should be connected to the upstream section of the meter tube first, and carefully centered; no sharp edges at this junction are allowed.

To prevent misalignment at this joint when a flanged connection has been used, two diametrically opposed bolt holes may be reamed and snug-fitting bolts installed, or dowel pins may be used. Other alignment methods may be used as long as the same result is obtained.

When the upstream section of the meter tube is attached to the orifice-fitting body by welding (preferred method), any distortion of the pipe resulting from the welding shall be removed by machining or grinding to meet the requirements of 2.5.1.3.

2.5.3.3 Inspection Considerations

In some instances, the inspection of an orifice fitting may not be as easy as the inspection of a conventional flanged orifice meter. This is true when the fitting in question is of the weld neck design and has already been connected to the meter tube. Unless the meter tube is of a large size, it may be difficult to make measurements in the vicinity of the orifice plate. To make this inspection easier, the fitting should have at least one flanged side (preferably the downstream side). The user should refer to the relevant pressure vessel and pipeline codes to determine whether this particular design may be used in a given system. All measurements of mechanical tolerances should be made after the fitting has been pressure-tested at the maximum required test pressure.

2.5.3.4 Bypass Checks

In orifice fittings, there is the possibility that some fluid may bypass the orifice plate. Tests shall be conducted after the meter run has been pressure-tested in accordance with the relevant code to ensure the following:

a. No differential pressure tap communication or leakage exists.
b. No holding or sealing device fluid bypass exists.

2.5.4 PRESSURE TAPS

2.5.4.1 Flange Taps

Meter tubes using flange taps shall have the center of the upstream pressure tap hole placed 1 inch from the upstream face of the orifice plate. The center of the downstream pressure tap hole shall be 1 inch from the downstream face of the orifice plate. Each tap hole shall be located at the 1-inch dimension within the tolerances shown in Figure 2-3. It is recommended that the maximum diameter ratio (β) of 0.75 allowable pressure tap hole location variation be used in the design of installations.

Orifice fittings may require different methods of confirming pressure tap hole location than orifice flanges.

Under no circumstances should there be any flow through or out of the flange tap or taps for purposes other than measuring static and/or differential pressure. This includes flows resulting from manufacturing defects that allow for tap communication or the use of the flange taps as a source of fluid for other instruments. For the latter, other taps located outside of the designated meter tube dimensions should be used.

The sharing of metering taps by multiple differential pressure devices may cause increased uncertainty and/or operational problems. If possible, such a practice should be avoided.

2.5.4.1.1 Orifice Fittings

When an orifice fitting is used, pressure tap hole measurements may be taken prior to final fabrication of the meter tube, especially when a fitting is to be welded to one end of the piping that will become an integral part of the completed meter tube. These measurements may be accomplished by using commercially available micrometers and gauges. Other technically valid techniques for verifying the pressure tap hole location are acceptable.

In orifice fittings, the orifice plate is held in place by a carrier mechanism that is intended to correctly position the orifice plate relative to the pressure tap holes. The plate/carrier combination used during pressure tap hole location testing should be of the

AVA Documents
Document Sharing Hub

Copyright American Petroleum Institute
Provided by IHS under license with API
No reproduction or networking permitted without license from IHS
Full document details: AGA Report 3-2 2006

Licensee=Shaw Group Inc/5948357001, User=Tagdiwala, Nihal
Not for Resale, 04/09/2008 00:40:51 MDT

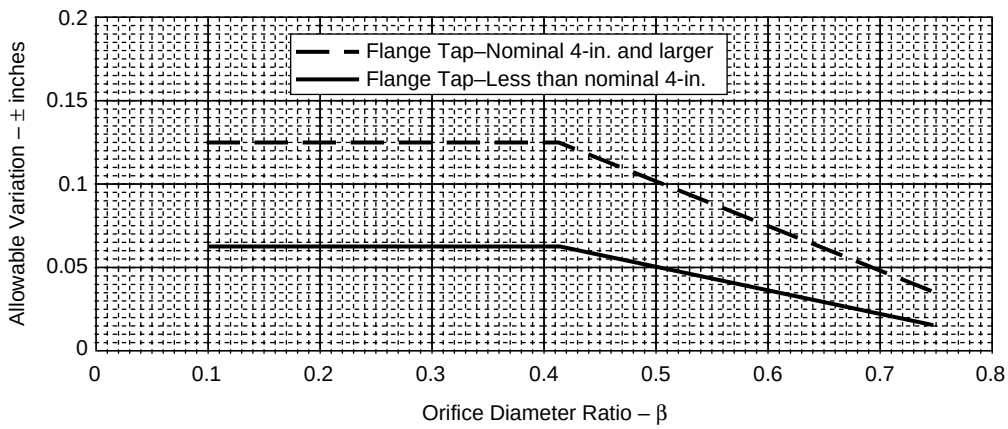

Figure 2-3—Allowable Variations in Pressure Tap Hole Location

same type (design) as will be employed in practice. If the internal mechanism of an orifice fitting is replaced, the inspection should be repeated.

For flange-tapped orifice fittings, the location of the flange tap relative to the faces of the orifice plate must be maintained. This precludes the use of either thicker or thinner plates than are specified by the original design, unless the thickness is within the maximum and minimum range shown in Table 2-3, and differential pressure tap hole tolerances and limits as specified in Figure 2.3 are satisfied, or the fitting has been redrilled. Likewise, the seals or other orifice holding devices should not affect the location of the plate relative to the taps. Seal/plate combinations should be checked to ensure that the tolerance on the location of the flange taps is not exceeded.

2.5.4.1.2 Orifice Flanges

When orifice flanges are used, the pressure tap hole placement may be determined by measuring from the face of the flange to the pressure tap hole center. Allowance must be made for the thickness and compression of gaskets, o-rings, or other plate-sealing mechanisms when the orifice plate is pressed between the two flanges.

2.5.4.2 Pressure Tap Drilling

Pressure tap holes shall be drilled radially to the meter tube; i.e., the centerline of the tap hole shall intersect and form a right angle with the axis of the meter tube.

2.5.4.3 Pressure Tap Diameter

The diameter of the pressure tap holes at the inner surface of the meter tube and along the drilled length of the holes shall be 3⁄8 (0.375) inch ± 1⁄64 (0.016) inch, providing for a maximum diameter of 0.391 inch and a minimum of 0.359 inch for pipe with a nominal diameter of 2 or 3 inches; and shall be 1⁄2 (0.5) inch ± 1⁄64 (0.016) inch, providing for a maximum diameter of 0.516 inch and a minimum of 0.484 inch for pipe with a nominal diameter of 4 inches or more.

The pressure tap holes in the orifice plate holder may be drilled out and prepared to receive the desired size of pressure-sensing line connection.

The diameter of the tap hole shall not be reduced within a length equal to 2.5 times the tap hole diameter, as measured from the inside surface of the meter tube. Reduction of the tap hole diameter while in service, due to the collection of liquids and/or particulate contamination, is unacceptable.

All pressure tap holes must be round to a tolerance of ± 0.004 inch throughout their length.

Similarly, the inside diameter of the gauge line should remain constant up to the differential pressure sensor and/or manifold.

To avoid any resonance in the gauge line, the length of the gauge line should be as short as possible or should have lengths (l) specified according to the highest frequency (f) of concern from one of the following formulas:

Documents
Document Sharing Hub
Copyright American Petroleum Institute
Provided by IHS under license with API
No reproduction or networking permitted without license from IHS
Licensee=Shaw Group Inc/5948357001, User=Tagdiwala, Nihal
Not for Resale, 04/09/2008 00:40:51 MDT
Full document details: AGA Report 3-2 2006