© COPYRIGHT 2019 AEROSPACE INDUSTRIES ASSOCIATION OF AMERICA, INC. ALL RIGHTS RESERVED

FED. SUPPLY CLASS

5355

AEROSPACE INDUSTRIES ASSOCIATION OF AMERICA, INC
1000 WILSON BLVD.
ARLINGTON, VA 22209

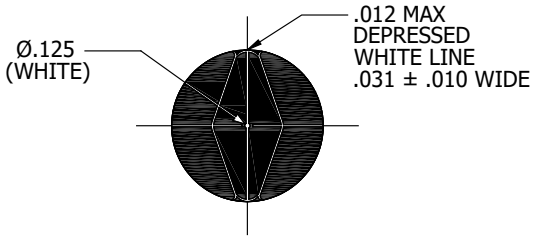

HEAD MARKING VIEW
(FOR NAS539-1A)

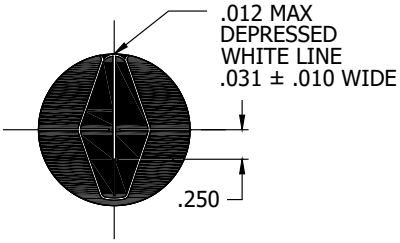

HEAD MARKING VIEW
(FOR NAS539-1B & NAS539-1C)

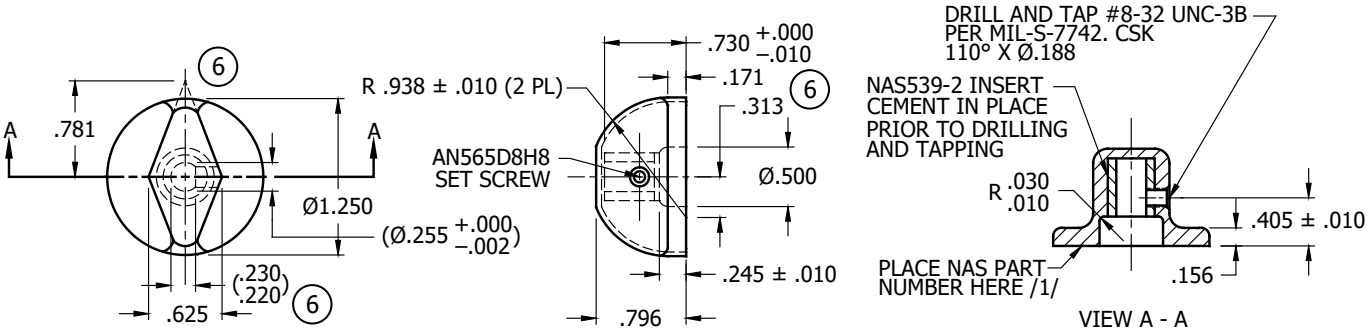

-1A KNOB ASSEMBLY, FUEL FLOW, FLATTED SHAFT

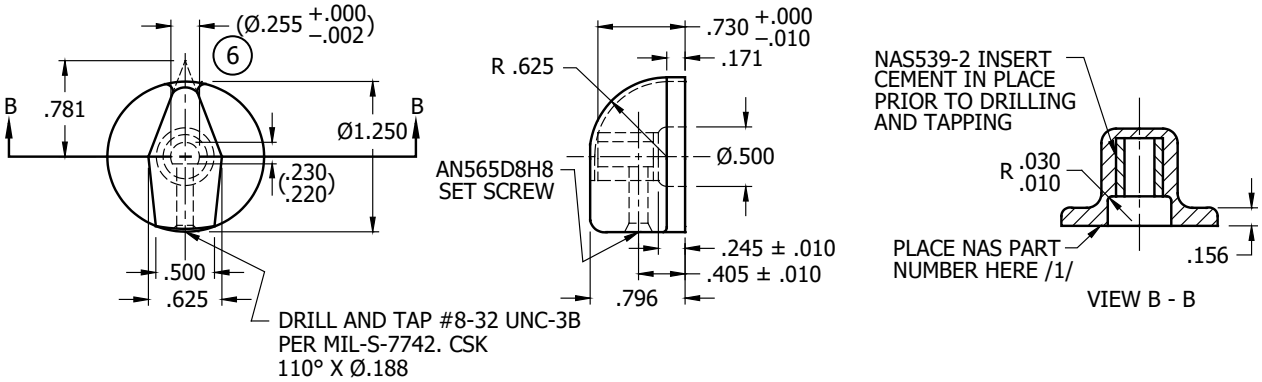

-1B KNOB ASSEMBLY, POINTER, FLATTED SHAFT

REVISION DATE: JUNE 28, 2019

ISSUE DATE: OCTOBER 1953

THIS DRAWING SUPERSEDES ALL ANTECEDENT STANDARD DRAWINGS FOR THE SAME PRODUCT AND SHALL BECOME EFFECTIVE NO LATER THAN SIX MONTHS FROM THE LAST REVISION DATE.

THIRD ANGLE PROJECTION	CUSTODIAN	REVISION
	NATIONAL AEROSPACE STANDARDS COMMITTEE	6
PROCUREMENT SPECIFICATION	TITLE	CLASSIFICATION PART STANDARD
NONE	**KNOB ASSEMBLY, TRANSILLUMINATED POINTER**	**NAS539**

SHEET 1 OF 3

FORM 19-01

USE OF OR RELIANCE UPON THIS DOCUMENT OR ANY NATIONAL AEROSPACE STANDARD IS ENTIRELY VOLUNTARY. AIA DOES NOT QUALIFY SUPPLIERS OR CERTIFY CONFORMANCE OF ITEMS PRODUCED UNDER NATIONAL AEROSPACE STANDARDS. AIA MAKES NO REPRESENTATION OR CLAIM RESPECTING (1) THE SUITABILITY OF ITEMS FOR ANY PARTICULAR APPLICATION OR (2) THE EXISTENCE OF OR APPLICABILITY THERETO OF PATENT OR TRADEMARKS RIGHTS.

Documents Document Sharing Hub

Full document details: AIA NAS539 2019

© COPYRIGHT 2019 AEROSPACE INDUSTRIES ASSOCIATION OF AMERICA, INC. ALL RIGHTS RESERVED

AEROSPACE INDUSTRIES ASSOCIATION OF AMERICA, INC
1000 WILSON BLVD.
ARLINGTON, VA 22209

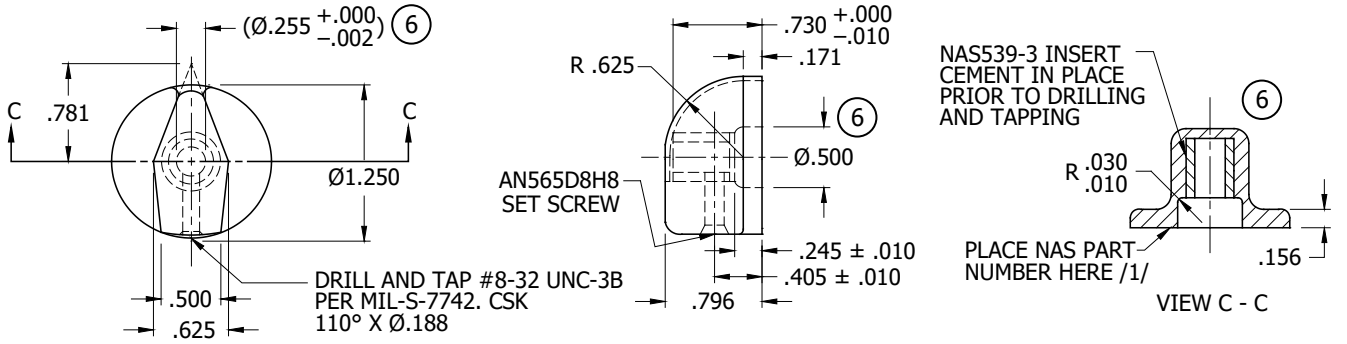

-1C KNOB ASSEMBLY, POINTER, ROUND SHAFT

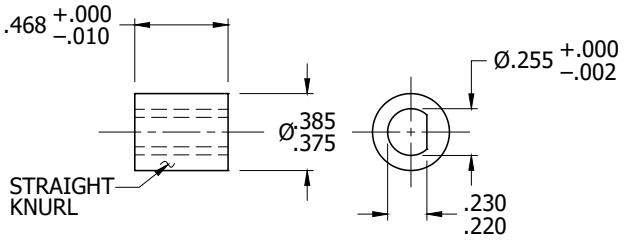

-2 INSERT

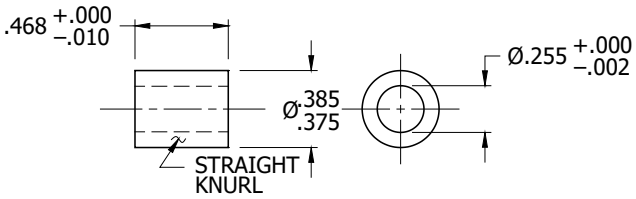

-3 INSERT

TABLE I – PART ASSEMBLY NUMBERS AND WEIGHTS

PART	NAS ASSEMBLY NUMBER	WEIGHT (LBS)
KNOB ASSEMBLY, FUEL FLOW (FLATTED SHAFT)	NAS539-1A	.026
KNOB ASSEMBLY, POINTER (FLATTED SHAFT)	NAS539-1B	.028
KNOB ASSEMBLY, POINTER (ROUND SHAFT)	NAS539-1C	.026
INSERT	NAS539-2	.009
INSERT	NAS539-3	.009

MATERIAL:

NAS539-1A, NAS539-1B & NAS539-1C: ~~TRANSPARENT PLASTIC MOLDING MATERIAL PER AMS3620, OR~~ CLEAR TRANSPARENT CAST POLYESTER.
NAS539-2 & NAS539-3: COMMERCIAL BRASS PER ASTM B36/B36M, ASTM B121/B121M, HALF HARD.

FINISH:

NAS539-1A, NAS539-1B & NAS539-1C: INSTRUMENT DULL BLACK OVER WHITE EXCEPT AS NOTED.
NAS539-2 & NAS539-3: ZINC PLATE PER ~~QQ-Z-325, TYPE I, CLASS 2~~ ASTM B633, TYPE I, SC 3.

THIS DRAWING SUPERSEDES ALL ANTECEDENT STANDARD DRAWINGS FOR THE SAME PRODUCT AND SHALL BECOME EFFECTIVE NO LATER THAN SIX MONTHS FROM THE LAST REVISION DATE.

FORM 19-01

USE OF OR RELIANCE UPON THIS DOCUMENT OR ANY NATIONAL AEROSPACE STANDARD IS ENTIRELY VOLUNTARY. AIA DOES NOT QUALIFY SUPPLIERS OR CERTIFY CONFORMANCE OF ITEMS PRODUCED UNDER NATIONAL AEROSPACE STANDARDS. AIA MAKES NO RESPONSIBILITY OR CLAIM RESPECTING (1) THE SUITABILITY OF ITEMS FOR ANY PARTICULAR APPLICATION OR (2) THE EXISTENCE OF OR APPLICABILITY THERETO OF PATENT OR TRADEMARKS RIGHTS.

Full document details: AIA NAS539 2019