AEROSPACE INDUSTRIES ASSOCIATION

NATIONAL AEROSPACE STANDARD

© COPYRIGHT 2011 AEROSPACE INDUSTRIES ASSOCIATION OF AMERICA, INC. ALL RIGHTS RESERVED

NATIONAL AEROSPACE STANDARDS

FED. SUPPLY CLASS
4730

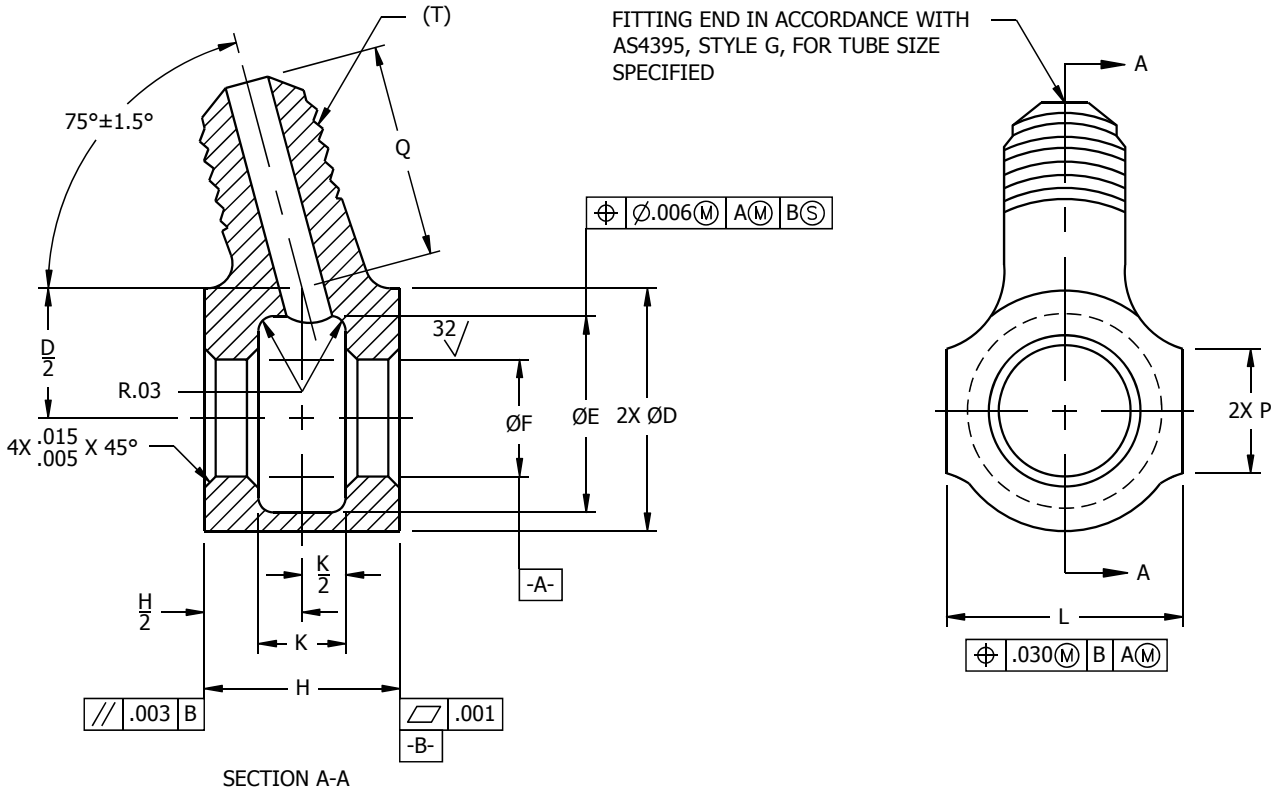

SECTION A-A

TABLE I – DIMENSIONS

BASIC PART NUMBER NAS553	TUBE OD	(T) THREAD	ØD ±.015	ØE ±.015	ØF +.002 −.000	H ±.005	K ±.015	L ±.030 ACROSS FLATS	P APPROX	Q ±.030
-4	.250	.4375-20 UNJF-3A	.813	.563	.437	.781	.375	.813	.438	.813
-5	.313	.5000-20 UNJF-3A	.813	.625	.500	.875	.500	.813	.438	.813
-6	.375	.5625-18 UNJF-3A	1.000	.750	.562	.968	.500	1.000	.500	.875
-8	.500	.7500-16 UNJF-3A	1.188	.938	.750	1.218	.750	1.188	.500	1.031
-10	.625	.8750-14 UNJF-3A	1.375	1.125	.875	1.375	.813	1.375	.625	1.188
-12	.750	1.0625-12 UNJ-3A	1.688	1.375	1.062	1.687	1.000	1.688	.625	1.313
-16	1.000	1.3125-12 UNJ-3A	2.063	1.688	1.312	2.125	1.500	2.063	.813	1.500

(4) COMPLETELY REVISED

THIRD ANGLE PROJECTION	CUSTODIAN NATIONAL AEROSPACE STANDARDS COMMITTEE	REVISION 4
PROCUREMENT SPECIFICATION AS4841	TITLE (4) **ELBOW, UNIVERSAL, 15°**	CLASSIFICATION PART STANDARD **NAS553** SHEET 1 OF 2

AEROSPACE INDUSTRIES ASSOCIATION OF AMERICA, INC
1000 WILSON BLVD.
ARLINGTON, VA 22209

THIS DRAWING SUPERSEDES ALL ANTECEDENT STANDARD DRAWINGS FOR THE SAME PRODUCT AND SHALL BECOME EFFECTIVE NO LATER THAN SIX MONTHS FROM THE LAST REVISION DATE.

REVISION DATE: AUGUST 26, 2011
ISSUE DATE: NOVEMBER 1964
FORM 09-01

Documents
Document Sharing Hub
USE OF OR RELIANCE UPON THIS DOCUMENT OR ANY NATIONAL AEROSPACE STANDARD IS ENTIRELY VOLUNTARY. AIA DOES NOT QUALIFY SUPPLIERS OR CERTIFY
Copyright Aerospace Industries Association of America Inc.
Provided by IHS under license with AIA/NAS ANCE OF ITEMS PRODUCED UNDER NATIONAL AEROSPACE STANDARDS Licensee= www.sepana.ir/5991803002, User=sam, albert E SUITABILITY OF
No reproduction or networking permitted without license from IHS AR APPLICATION OR (2) THE EXISTENCE OF OR APPLIC Not for Resale, 01/04/2016 22:33:54 MST TRADEMARKS RIGHTS.
Full document details: AIA NAS553 2011

© COPYRIGHT 2011 AEROSPACE INDUSTRIES ASSOCIATION OF AMERICA, INC. ALL RIGHTS RESERVED

AEROSPACE INDUSTRIES ASSOCIATION OF AMERICA, INC
1000 WILSON BLVD.
ARLINGTON, VA 22209

MATERIAL:

SEE PROCUREMENT SPECIFICATION, EXCEPT ALUMINUM ALLOY MATERIAL LIMITED TO 2014-T6 (UNS 92014) PER AMS-QQ-A-200/2, AMS-QQ-A-225/4, OR AMS-QQ-A-367; AND 2024-T4 (UNS A92024) PER AMS-QQ-A-200/3, AMS-QQ-A-225/6, OR AMS-QQ-A-250/4.

FINISH:

SEE PROCUREMENT SPECIFICATION.

EXAMPLE OF PART NUMBER:

NAS553-4 = STEEL ELBOW FOR .250 TUBE OD.
NAS553-4D = ALUMINUM ALLOY ELBOW FOR .250 TUBE OD.

NOTES:

(1) REMOVE ALL BURRS AND BREAK SHARP EDGES .005 - .010.

(2) DIMENSIONS IN INCHES.

(3) ALL THREADS AS8879 EXCEPT AS NOTED.

(4) DIMENSIONS APPLY AFTER FINISH UNLESS OTHERWISE SPECIFIED.

(5) INSTALL PER NAS550.

(6) DIMENSIONING AND TOLERANCING PER ANSI Y14.5M-1982.

(7) SURFACE ROUGHNESS: 125 MICROINCHES Ra PER ASME B46.1 EXCEPT AS NOTED. SURFACE TEXTURE SYMBOLS SHALL BE IN ACCORDANCE WITH ASME Y14.36M.

(8) TOLERANCES UNLESS OTHERWISE SPECIFIED: ±.015, ANGLES ±2 DEGREES.

(9) THIS STANDARD TAKES PRECEDENCE OVER DOCUMENTS REFERENCED HEREIN.

(10) UNLESS OTHERWISE SPECIFIED HEREIN, REFERENCED DOCUMENTS SHALL BE THE ISSUE IN EFFECT ON DATE OF MANUFACTURE. HOWEVER, EXISTING MATERIAL INVENTORY CERTIFIED TO A PREVIOUS REVISION OF THE APPLICABLE MATERIAL SPECIFICATION(S) IS ACCEPTABLE FOR USE UNTIL DEPLETION.

(11) UNLESS OTHERWISE SPECIFIED, PART INVENTORY MANUFACTURED TO PREVIOUS REVISIONS OF THE APPLICABLE DRAWING OR SPECIFICATION MAY BE PROCURED AND USED UNTIL STOCK IS DEPLETED.

THIS DRAWING SUPERSEDES ALL ANTECEDENT STANDARD DRAWINGS FOR THE SAME PRODUCT AND SHALL BECOME EFFECTIVE NO LATER THAN SIX MONTHS FROM THE LAST REVISION DATE.

4 COMPLETELY REVISED

FORM 09-01

USE OF OR RELIANCE UPON THIS DOCUMENT OR ANY NATIONAL AEROSPACE STANDARD IS ENTIRELY VOLUNTARY. AIA DOES NOT QUALIFY SUPPLIERS OR CERTIFY
ANCE OF ITEMS PRODUCED UNDER NATIONAL AEROSPACE STANDARDS E SUITABILITY OF
R APPLICATION OR (2) THE EXISTENCE OF OR APPLIC TRADEMARKS RIGHTS.

Documents
Document Sharing Hub

Copyright Aerospace Industries Association of America Inc.
Provided by IHS under license with AIA/NAS
No reproduction or networking permitted without license from IHS
Licensee= www.sepana.ir/5991803002, User=sam, albert
Not for Resale, 01/04/2016 22:33:54 MST
Full document details: AIA NAS553 2011