**ANSI/ASABE S639.2 FEB2019**
**Safety Standard for Large Row-Crop Flail Mowers**

**American Society of**
**Agricultural and Biological Engineers**

STANDARD

ASABE is a professional and technical organization, of members worldwide, who are dedicated to advancement of engineering applicable to agricultural, food, and biological systems. ASABE Standards are consensus documents developed and adopted by the American Society of Agricultural and Biological Engineers to meet standardization needs within the scope of the Society; principally agricultural field equipment, farmstead equipment, structures, soil and water resource management, turf and landscape equipment, forest engineering, food and process engineering, electric power applications, plant and animal environment, and waste management.

**NOTE:** ASABE Standards, Engineering Practices, and Data are informational and advisory only. Their use by anyone engaged in industry or trade is entirely voluntary. The ASABE assumes no responsibility for results attributable to the application of ASABE Standards, Engineering Practices, and Data. Conformity does not ensure compliance with applicable ordinances, laws and regulations. Prospective users are responsible for protecting themselves against liability for infringement of patents.

ASABE Standards, Engineering Practices, and Data initially approved prior to the society name change in July of 2005 are designated as “ASAE”, regardless of the revision approval date. Newly developed Standards, Engineering Practices and Data approved after July of 2005 are designated as “ASABE”.

Standards designated as “ANSI” are American National Standards as are all ISO adoptions published by ASABE. Adoption as an American National Standard requires verification by ANSI that the requirements for due process, consensus, and other criteria for approval have been met by ASABE.

Consensus is established when, in the judgment of the ANSI Board of Standards Review, substantial agreement has been reached by directly and materially affected interests. Substantial agreement means much more than a simple majority, but not necessarily unanimity. Consensus requires that all views and objections be considered, and that a concerted effort be made toward their resolution.

**CAUTION NOTICE**: ASABE and ANSI standards may be revised or withdrawn at any time. Additionally, procedures of ASABE require that action be taken periodically to reaffirm, revise, or withdraw each standard.

Copyright American Society of Agricultural and Biological Engineers. All rights reserved.

ASABE, 2950 Niles Road, St. Joseph, MI 49085-9659, USA, phone 269-429-0300, fax 269-429-3852, hq@asabe.org

Documents
Document Sharing Hub

Full document details: ANSI ASABE S639.2-2019

**ANSI/ASABE S639.2 FEB2019**
Revision approved February 2019 as an American National Standard

# Safety Standard for Large Row-Crop Flail Mowers

*Developed by ASABE Harvest committee. Approved by the Machinery Systems Technical Community of ASABE. Approved by ASABE and ANSI June 2016; revised September 2017, February 2019.*

**Keywords:** Flail, Mower, Row crop, Safety

## 1 Scope

This standard specifies the safety requirements and their verification for the design and construction of large row-crop flail mowers with a cutting width larger than 3 m and used exclusively in agricultural field applications and which have the rear part that can be opened for these particular field use operations. These machines may be equipped with adjustable material discharge gates or deflectors located on the rear of the mower. It describes methods for the elimination or reduction of hazards arising from the intended use and reasonably foreseeable misuse of these machines by one person (the operator) in the course of normal operation and service. In addition, it specifies the type of information on safe working practices to be provided by the manufacturer.

It is applicable only to mowers intended to work at ground level.

It is not applicable to flail mowers with less than 3 m in cutting width, and/or without the rear part that can be opened for particular field use operations, mowers with an articulated arm, pedestrian-controlled motor mowers, lawn mowers or machines specifically designed for highway and road maintenance.

## 2 Normative References

The following documents, in whole or in part, are normatively referenced in this document and are indispensable for its application. For dated references, only the edition cited applies. For undated references, the latest edition of the referenced document (including any amendments) applies.

ISO 536, Paper and board — Determination of grammage

ISO 789-1, Agricultural tractors — Test procedures — Part 1: Power tests for power take-off

ISO 1974, Paper — Determination of tearing resistance (Elmendorf method)

ISO 2758, Paper — Determination of bursting strength

ISO 3416, Textile floor coverings — Determination of thickness loss after prolonged, heavy static loading

ANSI/ASABE AD3600:2015, Tractors, machinery for agriculture and forestry, powered lawn and garden equipment — Operator's manuals — Content and format

ISO 4254-1:2013, Agricultural machinery — Safety — Part 1: General requirements

ISO 5718:2013, Harvesting equipment — Blades for agricultural rotary mowers — Requirements

ANSI/ASABE AD11684:1995, Tractors, machinery for agricultural and forestry, powered lawn and garden equipment – Safety signs and hazard pictorials — General principles

 Copyright American Society of Agricultural and Biological Engineers 

Documents
Document Sharing Hub

Full document details: ANSI ASABE S639.2-2019

ISO 12100:2010, Safety of machinery — General principles for design — Risk assessment and risk reduction

ISO 17103, Agricultural machinery -- Rotary disc mowers, rotary drum mowers and flail mowers -- Test methods and acceptance criteria for protective skirts

## 3 Definitions

The following definitions apply.

**3.1 cutting height flail mower:** distance from the ground to the active cutting edge of the cutting element when the cutting element is in the lowest position of rotation

**3.2 large row-crop flail mower:** mower with a cutting width larger than 3 m with a multiplicity of free-swinging cutting elements that rotate about a horizontal axis, which cuts the crop by impact and mulches it with the same working elements and gathers the crop in a row or distributes the crop in the field

**3.2.1 large windrowing flail mower:** large row-crop flail mower that cuts the crop by impact, mulches and then windrows the cut material in a row in the field

**3.2.2 large crop distributing flail mower:** large row-crop flail mower that cuts the crop by impact, mulches and then distributes the cut material over an area in the field wider than the width of the mower

**3.3 mulching:** operation intended to chop the crop and leave the material on the ground to naturally decompose

**3.4 protective skirt:** skirt used on the machine to provide protection from thrown objects

**3.5 Kraft paper:** paper produced from pure unbleached sulphate Kraft pulp with machine finished surface.

NOTE 1: It is mainly used for the manufacture of paper sacks and for lining and laminating.

NOTE 2: See clause 5.4.1.1 for specific details.

**3.6 test:** consists of two runs

**3.7 run:** a single pass through the thrown-object material

**3.8 impact:** a hole in the Kraft paper caused by a stone through which a cylindrical stick with a 6mm diameter semi-spherical end passes without noticeable effort on the hand of the operator

## 4 Requirements

### 4.1 General

Guards that are to be removed as a part of maintenance procedures, as described in the operator's manual, shall be fixed by systems that can be removed only with tools.

Where possible, these guards shall be incapable of remaining in place without their fixings.

The operator's manual to be provided with the machine shall comply with 6.1. The machine shall also be marked and carry safety signs according to 6.2.3.


Documents Document Sharing Hub
Full document details: ANSI ASABE S639.2-2019

## 4.2 Protection against inadvertent contact with the cutting elements

### 4.2.1 General

The mower shall be designed or guarded in such a way that inadvertent contact during normal operation with the cutting elements from the front, at the rear, the sides and the top is prevented.

The following requirements shall be fulfilled:

— the top protection shall be achieved by a rigid imperforate guard;

— at the sides, the protection shall be achieved by a rigid imperforate guard, located near the cutting elements and in such a way that the lower edge extends below the working element path by a minimum of 3 mm as defined in Figure 1 or meets the test requirements of the foot probe test (clause 5.2) and the thrown-object test (clause 5.3);

— on the front and at the rear, the protection shall be achieved by meeting the requirements of the of the foot probe test (clause 5.2) and the thrown-object test (clause 5.3).

Dimensions in millimetres

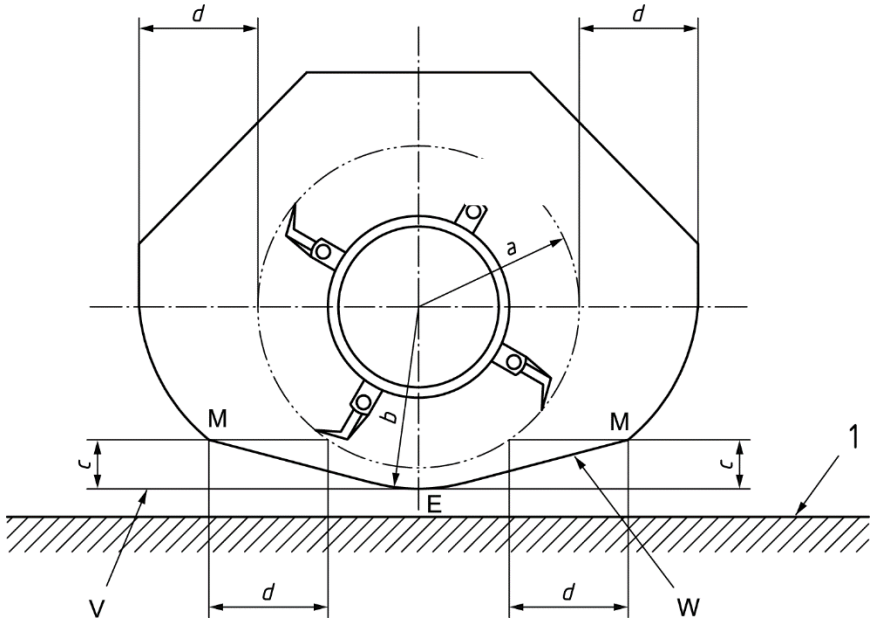


**Key**

1 ground
*a* cutting element path radius
*b* cutting element path radius +3 mm minimum
*c* distance between point M and V (max. 120 mm)
*d* horizontal safety distance of 200 mm minimum from cutting element path
E point on the circle with radius *b* on the vertical plane including the rotating axle
M mid-point intersection relative to *c* and *d*
V horizontal line passing through point E
W straight line passing through point M and tangential to a circle with radius *b*

**Figure 1 – Lateral location of the guard**

 Copyright American Society of Agricultural and Biological Engineers 

Documents
Document Sharing Hub
Full document details: ANSI ASABE S639.2-2019

#### 4.2.2 Protection against thrown objects that are not machine elements

The mower shall be fitted with protective devices to satisfy the acceptance criteria defined in 5.9, for thrown object tests specified in 5.3.

NOTE: This protective device may be, for example, a protective skirt, rigid imperforate guard, chains or rubber strips.

In the case where this device consists of a protective skirt, this protective skirt shall comply with the requirements of 5.10. In addition, the attachment(s) of the protective skirt shall meet the following requirements:

— if the protective skirt is clamped between two elements over its entire length, these elements shall not have sharp edges where they come into contact with the protective skirt;

— if the protective skirt is attached by being applied directly to an element, attachment devices (e.g. screws and rivets) shall be used with corresponding washers having a minimum diameter of four times the nominal diameter of the attaching devices. These washers shall not have any sharp edges. The distance between two attaching devices shall not exceed 250 mm;

— if the protective skirt is attached indirectly (e.g. by sliding over a tube) attachment elements shall not have any sharp edges.

#### 4.2.3 Protection during handling and transport

For machines with folding elements, the provisions of ISO 4254-1:2013, 4.9.2, apply.

In addition to the requirements of ISO 4254-1:2013 and in the case of powered lifting or swiveling, the control shall be of the hold-to-run type and the manual control shall be located outside the swiveling zone.

#### 4.2.4 Controls for adjustments

Adjustments shall be possible when the operator is in the operator's station, standing on the ground, or standing on a platform conforming to ISO 4254-1:2013.

If the adjustments can be carried out from the ground or from the platform:

— this shall be possible with the cutting elements stopped;

— the controls for adjustment shall be located on the top, or at the sides, front or rear of the mowing machine, at a maximum horizontal distance of 550 mm within the overall outer limits of the machine and, in addition, in case of mounted mowers, the operator shall not be required to stand between the lower link points to operate controls.

#### 4.2.5 Blades

The blades shall comply with the requirements of ISO 5718:2013,

— except for clause 4.1.

— except for clause 4.2.1. A flat specimen with the same cross-section, of the same blade lot and of the same treatment process as the blades it represents may be used for the bend test

#### 4.2.6 Overrunning clutch or freewheel device

If the mower is fitted with an overrunning clutch or a freewheel device, it shall be guarded as specified in 4.1.

If exposure is possible to elements that continue to rotate or move after the power is disengaged, there shall be evidence of rotation or an audible indication of rotation or a suitable safety sign. There shall be instruction in the


Documents Document Sharing Hub
Full document details: ANSI ASABE S639.2-2019

operator's manual stating the need to wait until all movement is stopped before servicing or swinging components into transport position.

#### 4.2.7 Implement hitch or carrier frame

When the implement hitch or carrier frame has a different lateral position for transport and working or a different vertical position, whose failure may lead to an uncontrolled change of direction, it shall be fitted with a mechanical or hydraulic locking device (e.g. a pin, a latch or a hydraulic valve), which requires an intentional action when changing from the transport position to the working position. When a hydraulic device is used, the implement hitch shall remain in position in case of a failure of the hydraulic circuit (e.g. check valve and lowering control valve).

## 5. Verification of the requirements

### 5.1 General

Verification of the requirements defined in clause 5 shall be made by means of inspection, calculation or testing. Dimensions, where given, shall be verified by measurements. Controls shall be verified by a functional test and positional measurements. Guards shall be verified by functional test and positional measurements.

### 5.2 Foot probe

#### 5.2.1 Foot probe test equipment

Foot probe test equipment shall be constructed in accordance with Figure 2.

Dimensions in millimetres

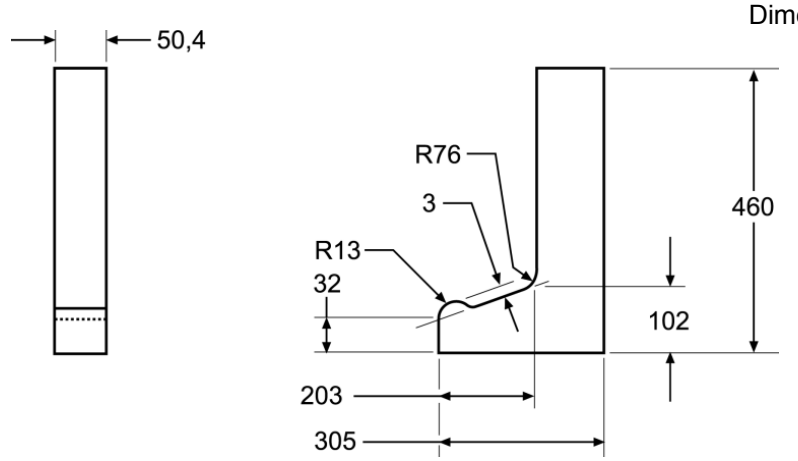


**Figure 2 – Foot probe test equipment**

#### 5.2.2 Test conditions

**5.2.2.1** The test shall be conducted under static conditions on a flat surface attached to a tractor.

**5.2.2.2** The cutting element shall be clamped to the cutting element holder simulating the maximum cutting tip diameter in the cutting plane.

**5.2.2.3** Components of the mowers or machine, or both, such as frames, etc., can be considered as part of the cutting element enclosure for the purpose of this test.

 Copyright American Society of Agricultural and Biological Engineers 

Documents
Document Sharing Hub
Full document details: ANSI ASABE S639.2-2019

### 5.2.3 Test procedure

The foot probe shall be introduced with the lower part horizontally to the mower and be held with the upper part in a vertical plane and rotated horizontally and vertically a maximum of 15 degrees to either side of the centerline while simultaneously being raised and lowered as shown in Figure 3b.

The probe shall be applied until a horizontal force of 110 N ±10 is reached, or until any portion of the cutting means enclosure lifts from its original position, or until contact is made with the cutting means path, whichever occurs first. If the cutting element path height is different for different cutting element speeds or cutting element options, the test shall be run at maximum cutting height.

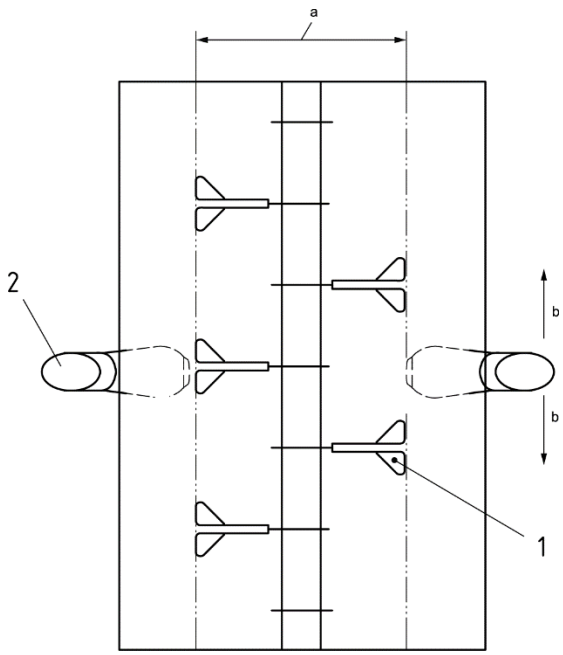


**a) Plan view**

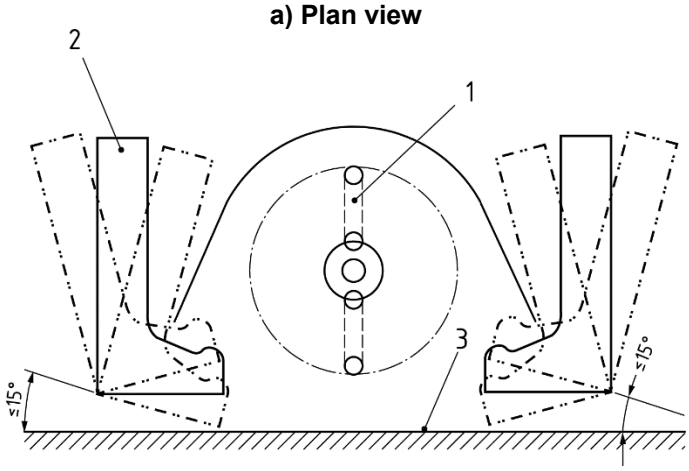


**b) Side view**

**Key**

a diameter of cutting element tip circle

b traverse periphery of flail housing, except where machine structure would keep person's foot or upright leg away

1 cutting element

2 foot probe

3 level ground

**Figure 3 – Foot probe test**



Documents Document Sharing Hub

Full document details: ANSI ASABE S639.2-2019

### 5.2.4 Test acceptance

The requirements that there is no contact between the probe and the cutting element or cutting element assemblies shall be verified by slow manual rotation of the cutting elements with all power off.

## 5.3 Thrown object test

### 5.3.1 Testing conditions

**5.3.1.1** Mower used for test

Tests shall be performed using the same large flail mower, and the same protective devices. If the large flail mower can be operated in different working positions (right side, center or left side of the tractor, see 4.2.7), the test shall be performed with the large flail mower in the rightmost and leftmost working positions behind the tractor as specified by the manufacturer in the operator's manual.

**5.3.1.2** Thrown-object guard adjustment

**5.3.1.2.1** If the row crop flail mower has any rear part(s) that can be opened for field use operations, i.e. equipped with adjustable material discharge gates or deflectors located on the rear of the mower, these parts may remain in the closed position for these thrown object tests.

**5.3.1.2.2** The rear discharge gates or deflectors shall be capable of being adjusted to a height no higher than the horizontal plane of the top of the rotary cutting elements or the lower edge of intended material discharge area from the flail mower if the discharge area of the cutting elements is guarded by machine components (see Figure 4). The rear discharge gates or deflectors of the mower shall be angled down at a minimum of 30 degree for the horizontal plane.

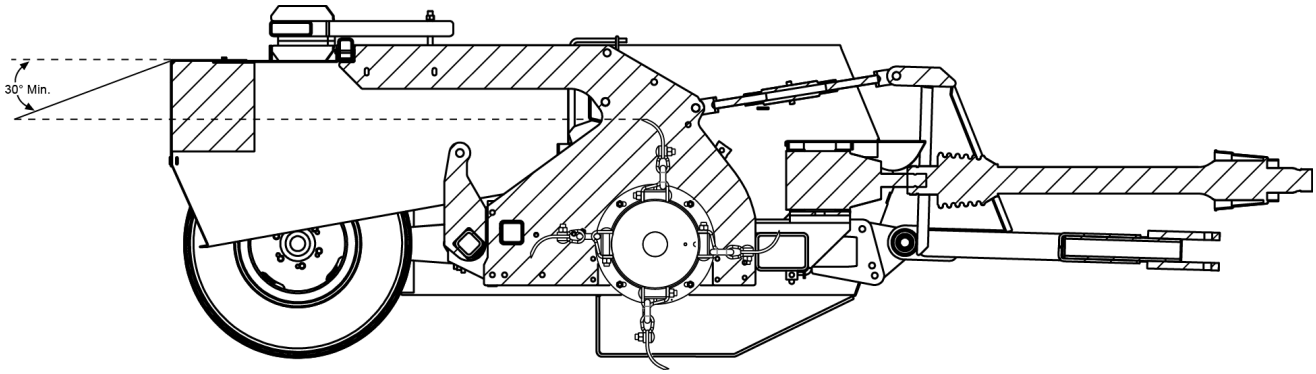


**Figure 4 – Discharge gate angle**

**5.3.1.3** Adjustable rear material discharge gates or deflectors

If the large flail mower has any rear part that can be opened for field use operations, i.e. equipped with adjustable material discharge gates or deflectors located on the rear of the mower, they may remain in the closed position for these thrown object tests.

**5.3.1.4** Cutting height

Cutting height shall be adjusted at 50 mm. If this is not possible due to the design of the large row-crop flail mower, cutting height shall be adjusted as near as possible to 50 mm.

 Copyright American Society of Agricultural and Biological Engineers 

Documents
Document Sharing Hub
Full document details: ANSI ASABE S639.2-2019