AMERICAN NATIONAL STANDARD

ANSI/ISA-60079-11 (12.02.01)-2014

Supersedes ANSI/ISA-60079-11 (12.02.01)-2013

Explosive Atmospheres – Part 11: Equipment protection by intrinsic safety "i" (Edition 6.2)

Approved 28 March 2014

Documents
Document Sharing Hub

Copyright International Society of Automation

Full document details: ANSI ISA 60079-11-2014

Commitment for Amendments

This standard is issued jointly by ISA and Underwriters Laboratories Incorporated (UL). Comments or proposals for revisions on any part of the standard may be submitted to ISA or UL at any time. Revisions to this standard will be made only after processing according to the standards development procedures of ISA and UL. ***ISA and UL will issue revisions to this standard by means of a new edition or revised or additional pages bearing their date of issue.***

ISBN: 978-0-876640-81-4
Copyright © 2014
By ISA

These materials are subject to copyright claims of IEC, ANSI, and ISA. All rights reserved. Not for resale. Printed in the United States of America. No part of this publication may be reproduced in any form, including an electronic retrieval system, without the prior written permission of ISA. All requests pertaining to this standard should be submitted to ISA.

Copyright © 2014
Underwriters Laboratories Incorporated

Revisions of this standard will be made by issuing revised or additional pages bearing their date of issue. A UL standard is current only if it incorporates the most recently adopted revisions, all of which are itemized on the transmittal notice that accompanies the latest set of revised requirements.

The most recent designation of ANSI/ISA-60079-11 and ANSI/UL 60079-11 as American National Standards occurred on 28 March 2014.

This ANSI/UL Standard for Safety, which consists of the sixth edition, is under continuous maintenance, whereby each revision is ANSI approved upon publication. Comments or proposals for revisions on any part of the standard may be submitted to UL at any time. Proposals should be submitted via a Proposal Request in UL's On-Line Collaborative Standards Development System (CSDS) at http://csds.ul.com.

Documents
Document Sharing Hub

Copyright International Society of Automation

Full document details: ANSI ISA 60079-11-2014

ISA
ANSI/ISA–60079-11
Edition 6.2

Underwriters Laboratories Inc.
ANSI/UL 60079-11
Sixth *Edition*

Explosive atmospheres – Part 11: Equipment protection by intrinsic safety "i"

Documents
Document Sharing Hub

Copyright International Society of Automation

Full document details: ANSI ISA 60079-11-2014

This page intentionally left blank.

Documents
Document Sharing Hub

Copyright International Society of Automation

Full document details: ANSI ISA 60079-11-2014

General Notes

This is the common ISA and UL standard for Explosive atmospheres - Part 11: Equipment protection by intrinsic safety “i”. It is edition 6.2 of ANSI/ISA-60079-11 (superseding ANSI/ISA-60079-11-2013) and edition 6 of ANSI/UL 60079-11.

ANSI/ISA-60079-11 and ANSI/UL 60079-11 contain identical requirements, with the publication date of. The presentation and format of the standards material may differ between the two published standards.

This common standard was prepared by ISA and Underwriters Laboratories Inc. (UL).

Although the intended primary application of this standard is stated in its scope, it is important to note that it remains the responsibility of the users of the standard to judge its suitability for their particular purpose.

Level of harmonization

This standard adopts the IEC text with deviations.

The requirements are presented in different formats. The ISA version of the standard illustrates the national differences from the IEC text through the use of legislative text (strike-out and underline). The UL version of the standard illustrates national differences immediately following the IEC text. National differences between the UL version and the ISA version shall be word for word except for editorial changes.

Interpretations

The interpretation by the SDO of an identical or equivalent standard shall be based on the literal text to determine compliance with the standard in accordance with the procedural rules of the SDO. If more than one interpretation of the literal text has been identified, a revision shall be proposed as soon as possible to each of the SDOs to more accurately reflect the intent.

UL Effective Date

The effective date for UL is the date of publication. However, the fifth edition of UL 60079-11 will also be effective until 1 September 2018.

A UL effective date is one established by Underwriters Laboratories Inc. and is not part of the ANSI approved standard.

Documents
Document Sharing Hub

Copyright International Society of Automation

Full document details: ANSI ISA 60079-11-2014

This page intentionally left blank.

Documents
Document Sharing Hub

Copyright International Society of Automation

Full document details: ANSI ISA 60079-11-2014

Preface (ISA)

This ISA standard is based on the 6th edition of IEC Publication 60079-11 including Corrigendum 1. It is the intention of the ISA12 Committee to develop an ANSI Standard that is harmonized with IEC 60079-11 to the fullest extent possible. This preface is included for informational purposes and is not part of ANSI/ISA-60079-11. The document is a modification of the IEC document and includes U.S. deviations encompassing both additions and deletions of information.

The entire text of IEC 60079-11:2011 is included in this document including Corrigendum 1. U.S. National Deviations are shown by strikeout through deleted text and underlining of added text. Tables, or portions of tables, that are to be deleted are shown as shaded; figures to be deleted are marked with the overlay "X." Some tables have been reformatted to allow for US standard paper sizes. There are ten annexes in this standard. Annexes A, B, D, F and G are normative and form part of the requirements of this standard. Annexes C, E, H, I and J are informative and are not considered part of this standard.

The significant changes with respect to the previous edition are listed below:

- Inclusion of non-edition specific references to ANSI/ISA-60079-0.
- The merging of the apparatus requirements for FISCO from ANSI/ISA-60079-27.
- The merging of the requirements for combustible dust atmospheres from ANSI/ISA-61241-11.
- Clarification of the requirements for accessories connected to intrinsically safe apparatus; such as chargers and data loggers.
- Addition of new test requirements for opto-isolators.
- Introduction of Annex H about ignition testing of semiconductor limiting power supply circuits.
- Clarification of the spacing requirements applicable to protective fuses.

The standards referenced within this document may contain provisions which, through reference in this text, constitute requirements of this document. At the time of publication, the editions indicated were valid. All standards are subject to revision, and parties to agreements based on this document are encouraged to investigate the possibility of applying the most recent editions of the standards indicated within this document. Members of IEC and ISO maintain registers of currently valid International Standards. ANSI maintains registers of currently valid U.S. National Standards.

This document has been prepared as part of the service of ISA toward a goal of uniformity in the field of instrumentation. To be of real value, this document should not be static but should be subject to periodic review. Toward this end, the Society welcomes all comments and criticisms and asks that they be addressed to the Secretary, Standards and Practices Board; ISA; 67 Alexander Drive; P. O. Box 12277; Research Triangle Park, NC 27709; Telephone (919) 549-8411; Fax (919) 549-8288; E-mail: standards@isa.org.

The ISA Standards and Practices Department is aware of the growing need for attention to the metric system of units in general, and the International System of Units (SI) in particular, in the preparation of instrumentation standards. The Department is further aware of the benefits to USA users of ISA standards of incorporating suitable references to the SI (and the metric system) in their business and professional dealings with other countries. Toward this end, this Department will endeavour to introduce SI-acceptable metric units in all new and revised standards, recommended practices, and technical reports to the greatest extent possible. IEEE/ASTM SI 10, *American National Standard for Metric Practice*, and future revisions, will be the reference guide for definitions, symbols, abbreviations, and conversion factors.

It is the policy of ISA to encourage and welcome the participation of all concerned individuals and interests in the development of ISA standards, recommended practices, and technical reports. Participation in the ISA standards-making process by an individual in no way constitutes endorsement by the employer of that

Documents
Document Sharing Hub

Copyright International Society of Automation

Full document details: ANSI ISA 60079-11-2014

individual, of ISA, or of any of the standards, recommended practices, and technical reports that ISA develops.

CAUTION — ISA DOES NOT TAKE ANY POSITION WITH RESPECT TO THE EXISTENCE OR VALIDITY OF ANY PATENT RIGHTS ASSERTED IN CONNECTION WITH THIS DOCUMENT, AND ISA DISCLAIMS LIABILITY FOR THE INFRINGEMENT OF ANY PATENT RESULTING FROM THE USE OF THIS DOCUMENT. USERS ARE ADVISED THAT DETERMINATION OF THE VALIDITY OF ANY PATENT RIGHTS, AND THE RISK OF INFRINGEMENT OF SUCH RIGHTS, IS ENTIRELY THEIR OWN RESPONSIBILITY.

PURSUANT TO ISA'S PATENT POLICY, ONE OR MORE PATENT HOLDERS OR PATENT APPLICANTS MAY HAVE DISCLOSED PATENTS THAT COULD BE INFRINGED BY USE OF THIS DOCUMENT AND EXECUTED A LETTER OF ASSURANCE COMMITTING TO THE GRANTING OF A LICENSE ON A WORLDWIDE, NON-DISCRIMINATORY BASIS, WITH A FAIR AND REASONABLE ROYALTY RATE AND FAIR AND REASONABLE TERMS AND CONDITIONS. FOR MORE INFORMATION ON SUCH DISCLOSURES AND LETTERS OF ASSURANCE, CONTACT ISA OR VISIT WWW.ISA.ORG/STANDARDSPATENTS.

OTHER PATENTS OR PATENT CLAIMS MAY EXIST FOR WHICH A DISCLOSURE OR LETTER OF ASSURANCE HAS NOT BEEN RECEIVED. ISA IS NOT RESPONSIBLE FOR IDENTIFYING PATENTS OR PATENT APPLICATIONS FOR WHICH A LICENSE MAY BE REQUIRED, FOR CONDUCTING INQUIRIES INTO THE LEGAL VALIDITY OR SCOPE OF PATENTS, OR DETERMINING WHETHER ANY LICENSING TERMS OR CONDITIONS PROVIDED IN CONNECTION WITH SUBMISSION OF A LETTER OF ASSURANCE, IF ANY, OR IN ANY LICENSING AGREEMENTS ARE REASONABLE OR NON-DISCRIMINATORY.

ISA REQUESTS THAT ANYONE REVIEWING THIS DOCUMENT WHO IS AWARE OF ANY PATENTS THAT MAY IMPACT IMPLEMENTATION OF THE DOCUMENT NOTIFY THE ISA STANDARDS AND PRACTICES DEPARTMENT OF THE PATENT AND ITS OWNER.

ADDITIONALLY, THE USE OF THIS DOCUMENT MAY INVOLVE HAZARDOUS MATERIALS, OPERATIONS OR EQUIPMENT. THE DOCUMENT CANNOT ANTICIPATE ALL POSSIBLE APPLICATIONS OR ADDRESS ALL POSSIBLE SAFETY ISSUES ASSOCIATED WITH USE IN HAZARDOUS CONDITIONS. THE USER OF THIS DOCUMENT MUST EXERCISE SOUND PROFESSIONAL JUDGMENT CONCERNING ITS USE AND APPLICABILITY UNDER THE USER'S PARTICULAR CIRCUMSTANCES. THE USER MUST ALSO CONSIDER THE APPLICABILITY OF ANY GOVERNMENTAL REGULATORY LIMITATIONS AND ESTABLISHED SAFETY AND HEALTH PRACTICES BEFORE IMPLEMENTING THIS DOCUMENT.

THE USER OF THIS DOCUMENT SHOULD BE AWARE THAT THIS DOCUMENT MAY BE IMPACTED BY ELECTRONIC SECURITY ISSUES. THE COMMITTEE HAS NOT YET ADDRESSED THE POTENTIAL ISSUES IN THIS VERSION.

The following people served as members of ISA12.2:

NAME	COMPANY
T. Adam, Chair	FM Approvals
M. Coppler*, Managing Director	Det Norske Veritas Certification Inc.
N. Abbatiello	Speer Equipment Inc.
R. Allen	Honeywell Inc.
S. Arnold	Ametek Drexelbrook
R. Brownlee	Pepperl & Fuchs

Documents
Document Sharing Hub
Copyright International Society of Automation
Full document details: ANSI ISA 60079-11-2014

S. Czaniecki	Endress + Hauser Canada
A. Engler*	Det Norske Veritas DNV
G. Garcha	GE Power & Water
J. Genre	Industrial Scientific Corp.
G. Kozinski	GE Infrastructure Sensing
R. Masek	CSA Group
J. McCormick	Siemens Process Analytics
J. Miller	Detector Electronics Corp.
S. Nguyen*	Siemens Milltronics Ltd.
A. Page	Consultant
R. Parks	Intertek
T. Patel	Littelfuse, Inc.
B. Saxinger	BW Technologies by Honeywell
B. Schaefer	UL LLC
T. Schnaare	Rosemount Inc.
J. Thomas	Schlumberger
L. Vlagea	General Monitors
T. Woods	GE Oil & Gas

_____
* One vote per company

The following people served as members of ISA12:

NAME	COMPANY
T. Schnaare, Chair	Rosemount Inc.
W. Lawrence, Vice Chair	FM Approvals LLC
M. Coppler, Managing Director	Det Norske Veritas Certification Inc.
R. Allen	Honeywell Inc.
D. Ankele	UL LLC
K. Boegli	Phoenix Contact
D. Burns	Shell P&T – Innovation / R&D
C. Casso	Nabors Industries
M. Dona	Santos Ltd.
T. Dubaniewicz	NIOSH
D. El Tawy	Solar Turbines, Inc.
W. Fiske	Intertek
G. Garcha	GE Power & Water
R. Holub	The DuPont Company Inc.
P. Kovscek	Industrial Scientific Corporation
J. Kuczka	Killark
E. Leubner	Eaton's Crouse-Hinds Business
N. Ludlam	FM Approvals Ltd.
E. Massey	Baldor Electric Company
J. Miller	Detector Electronics Corporation
A. Page	Consultant
R. Seitz	Artech Engineering
R. Sierra	USCG
M. Spencer	Columbia Gas Transmission
R. Wigg	E-x Solutions International Pty. Ltd.

Documents
Document Sharing Hub
Copyright International Society of Automation
Full document details: ANSI ISA 60079-11-2014

This document was approved for publication by the ISA Standards and Practices Board on 28 February 2014.

NAME	COMPANY
E. Cosman, Vice President	The Dow Chemical Company
D. Bartusiak	ExxonMobil Chemical Company
P. Brett	Honeywell Inc.
J. Campbell	Consultant
M. Coppler	Det Norske Veritas Certification Inc.
B. Dumortier	Schneider Electric
D. Dunn	Consultant
J. Federlein	Federlein & Assoc. Inc.
J. Gilsinn	Kenexis Consulting
E. Icayan	Atkins
J. Jamison	Spectra Energy Ltd.
K. P. Lindner	Endress + Hauser Process Solutions AG
V. Maggioli	Feltronics Corp.
T. McAvinew	Instrumentation and Control Engineering, LLC
V. Mezzano	Fluor Corp.
C. Monchinski	Automated Control Concepts Inc.
R. Reimer	Rockwell Automation
S. Russell	Valero Energy Corp.
N. Sands	DuPont
H. Sasajima	Azbil Corp.
T. Schnaare	Rosemount Inc.
J. Tatera	Tatera & Associates Inc.
I. Verhappen	Industrial Automation Networks Inc.
W. Weidman	WCW Consulting
J. Weiss	Applied Control Solutions LLC
M. Wilkins	Yokogawa IA Global Marketing USMK
D. Zetterberg	Chevron Energy Technology Co.

Documents
Document Sharing Hub

Copyright International Society of Automation

Full document details: ANSI ISA 60079-11-2014

National Differences

GENERAL

National Differences from the text of International Electrotechnical Commission (IEC) Publication 60079-11, Explosive Atmospheres – Part 11: Equipment Protection by Intrinsic Safety ″i″ copyright 2011, are indicated by notations (differences) and are presented in bold text.

In the ISA publication of this standard, National Differences are presented using legislative text (strike-out and underline). The national difference type is identified in an informative annex.

There are five types of National Differences as noted below. The difference type is noted on the first line of the National Difference in the standard. The standard may not include all types of these National Differences.

The UL printed standard includes the national difference types within the body of the text. The ISA printed standard includes the national difference types in an annex at the back of the standard.

D1 – These are National Differences which are based on **basic safety principles and requirements**, elimination of which would compromise safety for consumers and users of products.

D2 – These are national differences from IEC requirements based on existing **safety practices**. These requirements reflect national safety practices, where empirical substantiation (for the IEC or national requirement) is not available or the text has not been included in the IEC standard.

DC – These are National Differences based on the **component standards** and will not be deleted until a particular component standard is harmonized with the IEC component standard.

DE – These are National Differences based on **editorial comments or corrections**.

DR – These are National Differences based on the **national regulatory requirements**.

Each national difference contains a description of what the national difference entails. Typically one of the following words is used to explain how the text of the national difference is to be applied to the base IEC text:

Addition / Add - An addition entails adding a complete new numbered clause, subclause, table, figure, or annex. Addition is not meant to include adding select words to the base IEC text.

Deletion / Delete - A deletion entails complete deletion of an entire numbered clause, subclause, table, figure, or annex without any replacement text.

Modification / Modify - A modification is an altering of the existing base IEC text such as the addition, replacement or deletion of certain words or the replacement of an entire clause, subclause, table, figure, or annex of the base IEC text.

Documents
Document Sharing Hub

Copyright International Society of Automation

Full document details: ANSI ISA 60079-11-2014

This page intentionally left blank.

Documents
Document Sharing Hub

Copyright International Society of Automation

Full document details: ANSI ISA 60079-11-2014

CONTENTS

1 Scope 17
2 ~~Normative~~ references 23
3 Terms and definitions 24
4 Grouping and classification of intrinsically safe apparatus and associated apparatus 30
5 Levels of protection and ignition compliance requirements of electrical apparatus 31
5.1 General 31
5.2 Level of protection "ia" 31
5.3 Level of protection "ib" 32
5.4 Level of protection "ic" 32
5.5 Spark ignition compliance 32
5.6 Thermal ignition compliance 33
5.7 Simple apparatus 36
6 Apparatus construction 37
6.1 Enclosures 37
6.2 Facilities for connection of external circuits 39
6.3 Separation distances 44
6.4 Protection against polarity reversal 55
6.5 Earth conductors, connections and terminals 55
6.6 Encapsulation 56
7 Components on which intrinsic safety depends 58
7.1 Rating of components 58
7.2 Connectors for internal connections, plug-in cards and components 58
7.3 Fuses 59
7.4 Primary and secondary cells and batteries 60
7.5 Semiconductors 63
7.6 Failure of components, connections and separations 64
7.7 Piezo-electric devices 66
7.8 Electrochemical cells for the detection of gases 66
8 Infallible components, infallible assemblies of components and infallible connections on which intrinsic safety depends 66
8.1 Level of Protection “ic” 66
8.2 Mains transformers 66
8.3 Transformers other than mains transformers 68
8.4 Infallible windings 69
8.5 Current-limiting resistors 69
8.6 Capacitors 70
8.7 Shunt safety assemblies 71
8.8 Wiring, printed circuit board tracks, and connections 72
8.9 Galvanically separating components 73
9 Supplementary requirements for specific apparatus 74
9.1 Diode safety barriers 74
9.2 FISCO apparatus 75

Documents
Document Sharing Hub

Copyright International Society of Automation

Full document details: ANSI ISA 60079-11-2014

9.3 Handlights and caplights ... 75
10 Type verifications and type tests ... 75
10.1 Spark ignition test ... 75
10.2 Temperature tests ... 79
10.3 Dielectric strength tests ... 80
10.4 Determination of parameters of loosely specified components ... 80
10.5 Tests for cells and batteries ... 81
10.6 Mechanical tests ... 83
10.7 Tests for intrinsically safe apparatus containing piezoelectric devices ... 83
10.8 Type tests for diode safety barriers and safety shunts ... 84
10.9 Cable pull test ... 84
10.10 Transformer tests ... 85
10.11 Optical isolators tests ... 85
10.12 Current carrying capacity of infallible printed circuit board connections ... 87
11 Routine verifications and tests ... 88
11.1 Routine tests for diode safety barriers ... 88
11.2 Routine tests for infallible transformers ... 88
12 Marking ... 89
12.1 General ... 89
12.2 Marking of connection facilities ... 90
12.3 Warning markings ... 90
12.4 Examples of marking ... 91
13 Documentation ... 92
Annex A (normative) Assessment of intrinsically safe circuits ... 95
Annex B (normative) Spark test apparatus for intrinsically safe circuits ... 117
Annex C (informative) Measurement of creepage distances, clearances and separation distances through casting compound and through solid insulation ... 125
Annex D (normative) Encapsulation ... 129
Annex E (informative) Transient energy test ... 137
Annex F (normative) Alternative separation distances for assembled printed circuit boards and separation of components ... 141
Annex G (normative) Fieldbus intrinsically safe concept (FISCO) – Apparatus requirements ... 145
Annex H (informative) Ignition testing of semiconductor limiting power supply circuits ... 151
Annex I (informative) Explanatory guide for the application of "ic" ... 163
Annex J (informative) National Differences Types noted in ANSI/ISA-60079-11 United States National Differences for IEC 60079-11 ... 173

Figure 1 – Separation of intrinsically safe and non-intrinsically safe terminals ... 42
Figure 2 – Example of separation of conducting parts ... 47
Figure 3 – Determination of creepage distances ... 51
Figure 4 – Creepage distances and clearances on printed circuit boards ... 53
Figure 5 – Examples of independent and non-independent connecting elements ... 56

Documents
Document Sharing Hub
Copyright International Society of Automation
Full document details: ANSI ISA 60079-11-2014

Figure A.2 – Group I capacitive circuits 99
Figure A.3 – Group II capacitive circuits 100
Figure A.5 – Group I inductive circuits 102
Figure A.6 – Group IIC inductive circuits 103
Figure A.7 – Simple inductive circuit 104
Figure A.8 – Simple capacitive circuit 104
Figure A.9 – Equivalent capacitance 116
Figure B.1 – Spark test apparatus for intrinsically safe circuits 121
Figure B.2 – Cadmium contact disc 122
Figure B.3 – Wire holder 122
Figure B.4 – Example of a practical design of spark test apparatus 123
Figure B.5 – Arrangement for fusing tungsten wires 124
Figure C.1 – Measurement of clearance 125
Figure C.2 – Measurement of composite distances 126
Figure C.3 – Measurement of creepage 127
Figure C.4 – Measurement of composite creepage 127
Figure D.1 – Examples of encapsulated assemblies conforming to 6.3.5 and 6.6 131
Figure D.2 – Applications of encapsulation using casting compound without an enclosure ... 133
Figure D.3 – Examples of assemblies using moulding conforming to 6.6 134
Figure E.1 – Example of test circuit 138
Figure E.2 – Example of output waveform 139
Figure G.1 – Typical system 150
Figure H.1 – Safety factor vs ignition probability 161

Table 1 – Applicability of specific clauses of IEC 60079-0 18
Table 2 – Temperature classification of copper wiring (in a maximum ambient temperature of 40 °C) 34
Table 3 – Temperature classification of tracks on printed circuit boards (in a maximum ambient temperature of 40 °C) 35
Table 4 – Maximum permitted power dissipation within a component immersed in dust 36
Table 5 – Clearances, creepage distances and separations 46
Table 6 – Minimum foil thickness or minimum wire diameter of the screen in relation to the rated current of the fuse 67
Table 7 – Compositions of explosive test mixtures adequate for 1,0 safety factor 76
Table 8 – Compositions of explosive test mixtures adequate for 1,5 safety factor 77
Table 10 – Routine test voltages for infallible transformers 89
Table 11 – Text of warning markings 90
Table A.1 – Permitted short-circuit current corresponding to the voltage and the Equipment Group 105
Table A.2 – Permitted capacitance corresponding to the voltage and the Equipment Group . 110

Documents
Document Sharing Hub
Copyright International Society of Automation
Full document details: ANSI ISA 60079-11-2014

Table A.3 – Permitted reduction of effective capacitance when protected by a series resistance 116

Table F.1 – Clearances, creepage distances and separations for Level of Protection ”ia” and “ib” when ingress protected, and special conditions of material and installation are fulfilled 143

Table F.2 – Clearances, creepage distances and separations for Level of Protection ”ic” when ingress is protected by an enclosure or by special conditions of installation 144

Table G.1 – Assessment of maximum output current for use with ‘ia’ and ‘ib’ FISCO rectangular supplies 146

Table G.2 – Assessment of maximum output current for use with ‘ic’ FISCO rectangular supplies 146

Table H.1 – Sequence of tests 154

Table H.2 – Safety factor provided by several explosive test mixtures that may be used for the tests in Table H.1 156

Table H.3 – Example of a Group I circuit with characteristics described by Curve II of Figure H.1 – This passes the test sequence of Table H.1 157

Table H.4 – Example of a Group I circuit with characteristics described by Curve III of Figure H.1 – This does not pass the test sequence of Table H.1 159

Documents
Document Sharing Hub

Copyright International Society of Automation

Full document details: ANSI ISA 60079-11-2014

EXPLOSIVE ATMOSPHERES –

Part 11: Equipment protection by intrinsic safety "i"

1 Scope

This standard ~~part of IEC 60079~~ specifies the construction and testing of intrinsically safe apparatus intended for use in an explosive atmosphere and for associated apparatus, which is intended for connection to intrinsically safe circuits which enter such atmospheres.

This type of protection is applicable to electrical equipment in which the electrical circuits themselves are incapable of causing an explosion in the surrounding explosive atmospheres.

This standard is also applicable to electrical equipment or parts of electrical equipment located outside the explosive atmosphere or protected by another Type of Protection listed in ANSI/ISA-60079-0 ~~IEC 60079-0~~, where the intrinsic safety of the electrical circuits in the explosive atmosphere may depend upon the design and construction of such electrical equipment or parts of such electrical equipment. The electrical circuits exposed to the explosive atmosphere are evaluated for use in such an atmosphere by applying this standard.

The requirements for intrinsically safe systems are provided in ISA-60079-25 ~~IEC 60079-25~~.

This standard supplements and modifies the general requirements of ANSI/ISA-60079-0 ~~IEC 60079-0~~, except as indicated in Table 1. Where a requirement of this standard conflicts with a requirement of ANSI/ISA-60079-0 ~~IEC 60079-0~~, the requirements of this standard shall take precedence.

If requirements in this standard are applicable to both intrinsically safe apparatus and associated apparatus the term “apparatus” is used throughout the standard.

This standard is for electrical equipment only; therefore the term “equipment” used in the standard always means “electrical equipment”.

If associated apparatus is placed in the explosive atmosphere, it shall be protected by an appropriate Type of Protection listed in ANSI/ISA-60079-0 ~~IEC 60079-0~~, and then the requirements of that method of protection together with the relevant parts of ANSI/ISA-60079-0 ~~IEC 60079-0~~, also apply to the associated apparatus.

Documents
Document Sharing Hub

Copyright International Society of Automation

Full document details: ANSI ISA 60079-11-2014

Table 1 – Applicability of specific clauses of ANSI/ISA-60079-0 ~~IEC 60079-0~~,

Clause or subclause of ANSI/ISA-60079-0 ~~IEC 60079-0~~,			ANSI/ISA-60079-0 ~~IEC 60079-0~~, clause application to ~~IEC 60079-11~~ ANSI/ISA-60079-11		
			Intrinsically safe apparatus		Associated apparatus
Ed. 5.0 ~~(2007)~~ (informative)	Ed. 6.0 ~~(2011)~~ (informative)	Clause / Subclause title (normative)	Group I and Group II	Group III	
1	1	Scope	Applies	Applies	Applies
2	2	Normative references	Applies	Applies	Applies
3	3	Terms and definitions	Applies	Applies	Applies
4	4	Equipment grouping	Applies	Applies	Applies
4.1	4.1	Group I	Applies	Excluded	Applies
4.2	4.2	Group II	Applies	Excluded	Applies
4.3	4.3	Group III	Excluded	Applies	Applies
4.4	4.4	Equipment for a particular explosive atmosphere	Applies	Applies	Applies
5.1	5.1	Environmental influences	Applies	Applies	Applies
5.1.1	5.1.1	Ambient temperature	Applies	Applies	Applies
5.1.2	5.1.2	External source of heating or cooling	Applies	Applies	Applies
5.2	5.2	Service temperature	Applies	Applies	Applies
5.3.1	5.3.1	Determination of maximum surface temperature	Applies	Applies	Excluded
5.3.2.1	5.3.2.1	Group I electrical equipment	Applies	Excluded	Excluded
5.3.2.2	5.3.2.2	Group II electrical equipment	Applies	Excluded	Excluded
5.3.2.3	5.3.2.3	Group III electrical equipment	Excluded	Applies	Excluded
5.3.3	5.3.3	Small component temperature for Group I or Group II electrical equipment	Applies	Excluded	Excluded
6.1	6.1	General	Applies	Applies	Applies
6.2	6.2	Mechanical strength of equipment	Excluded except when 6.1.2.3a) is applied	Excluded except when 6.1.3 a) is applied.	Excluded except when 6.1.2.3a) is applied
6.3	6.3	Opening times	Excluded	Excluded	Excluded
6.4	6.4	Circulating currents in enclosures (e.g. of large electrical machines)	Excluded	Excluded	Excluded
6.5	6.5	Gasket retention	Excluded except when 6.1.2.3a)is applied	Excluded except when 6.1.3 a) is applied.	Excluded except when 6.1.2.3a) is applied

Documents
Document Sharing Hub
Copyright International Society of Automation
Full document details: ANSI ISA 60079-11-2014

Clause or subclause of ANSI/ISA-60079-0 ~~IEC 60079-0~~,			ANSI/ISA-60079-0 ~~IEC 60079-0~~, clause application to ~~IEC 60079-11~~ ANSI/ISA-60079-11		
			Intrinsically safe apparatus		Associated apparatus
Ed. 5.0 ~~(2007)~~ (informative)	**Ed. 6.0 ~~(2011)~~ (informative)**	**Clause / Subclause title (normative)**	**Group I and Group II**	**Group III**	
6.6	6.6	Electromagnetic and ultrasonic radiating equipment	Applies	Applies	Excluded
7.1.1	7.1.1	Applicability	Excluded except when 6.1.2.3a) is applied	Excluded except when 6.1.3 a) is applied.	Excluded except when 6.1.2.3a) is applied
7.1.2	7.1.2.1	Specification of materials	Excluded except when 6.1.2.3a) is applied	Excluded except when 6.1.3 a) is applied.	Excluded except when 6.1.2.3a) is applied
7.1.3	7.1.2.2	Plastic materials	Excluded except when 6.1.2.3a) is applied	Excluded except when 6.1.3 a) is applied.	Excluded except when 6.1.2.3a) is applied
7.1.4	7.1.2.3	Elastomers	Excluded except when 6.1.2.3a) is applied	Excluded except when 6.1.3 a) is applied.	Excluded except when 6.1.2.3a) is applied
7.2	7.2	Thermal endurance	Excluded except when 6.1.2.3a) is applied	Excluded except when 6.1.3 a) is applied.	Excluded except when 6.1.2.3a) is applied
7.3	7.3	Resistance to light	Excluded except when 6.1.2.3a) is applied	Excluded except when 6.1.3 a) is applied.	Excluded except when 6.1.2.3a) is applied
7.4	7.4	Electrostatic charges on external non-metallic materials	Applies	Applies	Excluded
NR	7.5	Accessible metal parts	Applies	Applies	Excluded
7.5	NR	Threaded holes	Excluded except when 6.1.2.3a) is applied	Excluded except when 6.1.3 a) is applied.	Excluded except when 6.1.2.3a) is applied
8.1	8.1	Material composition	Applies	Applies	Excluded
8.1.1	8.2	Group I	Applies	Excluded	Excluded
8.1.2	8.3	Group II	Applies	Excluded	Excluded
8.1.3	8.4	Group III	Excluded	Applies	Excluded
8.2	NR	Threaded holes	Excluded except when 6.1.2.3a) is applied	Excluded except when 6.1.3 a) is applied.	Excluded except when 6.1.2.3a) is applied
9	9	Fasteners	Excluded	Excluded	Excluded
10	10	Interlocking devices	Excluded	Excluded	Excluded
11	11	Bushings	Excluded	Excluded	Excluded
12	12	Materials used for cementing	Excluded except when 6.1.2.3a) is applied	Excluded except when 6.1.3 a) is applied.	Excluded except when 6.1.2.3a) is applied
13	13	Ex Components	Applies	Applies	Applies
14	14	Connection facilities and termination compartments	Excluded	Excluded	Excluded

Documents
Document Sharing Hub

Copyright International Society of Automation

Full document details: ANSI ISA 60079-11-2014

Clause or subclause of ANSI/ISA-60079-0 ~~IEC 60079-0~~,			ANSI/ISA-60079-0 ~~IEC 60079-0~~, clause application to ~~IEC 60079-11~~ ANSI/ISA-60079-11		
			Intrinsically safe apparatus		Associated apparatus
Ed. 5.0 ~~(2007)~~ (informative)	**Ed. 6.0 ~~(2011)~~ (informative)**	**Clause / Subclause title (normative)**	**Group I and Group II**	**Group III**	
15	15	Connection facilities for earthing or bonding conductors	Excluded	Excluded	Excluded
16	16	Entries into enclosures	Excluded except when 6.1.2.3a) is applied	Excluded except when 6.1.3 a) is applied.	Excluded except when 6.1.2.3a) is applied
17	17	Supplementary requirements for rotating machines	Excluded	Excluded	Excluded
18	18	Supplementary requirements for switchgear	Excluded	Excluded	Excluded
19	19	Supplementary requirements for fuses	Excluded	Excluded	Excluded
20	20	Supplementary requirements for plugs, socket outlets and connectors	Excluded	Excluded	Excluded
21	21	Supplementary requirements for luminaires	Excluded	Excluded	Excluded
22	22	Supplementary requirements for caplights and handlights	Modified	Modified	Excluded
23.1	23.1	General	Applies	Applies	Applies
23.2	23.2	Batteries	Excluded	Excluded	Excluded
23.3	23.3	Cell types	Applies	Applies	Applies
23.4	23.4	Cells in a battery	Applies	Applies	Applies
23.5	23.5	Ratings of batteries	Applies	Applies	Applies
23.6	23.6	Interchangeability	Applies	Applies	Applies
23.7	23.7	Charging of primary batteries	Applies	Applies	Applies
23.8	23.8	Leakage	Applies	Applies	Applies
23.9	23.9	Connections	Applies	Applies	Applies
23.10	23.10	Orientation	Applies	Applies	Applies
23.11	23.11	Replacement of cells or batteries	Applies	Applies	Applies
23.12	23.12	Replaceable battery pack	Applies	Applies	Applies
24	24	Documentation	Applies	Applies	Applies
25	25	Compliance of prototype or sample with documents	Applies	Applies	Applies
26.1	26.1	General	Applies	Applies	Applies
26.2	26.2	Test configuration	Applies	Applies	Applies

Documents
Document Sharing Hub

Copyright International Society of Automation

Full document details: ANSI ISA 60079-11-2014

Clause or subclause of ANSI/ISA-60079-0 ~~IEC 60079-0~~,			ANSI/ISA-60079-0 ~~IEC 60079-0~~, clause application to ~~IEC 60079-11~~ ANSI/ISA-60079-11		
			Intrinsically safe apparatus		Associated apparatus
Ed. 5.0 ~~(2007)~~ (informative)	**Ed. 6.0 ~~(2011)~~ (informative)**	**Clause / Subclause title (normative)**	**Group I and Group II**	**Group III**	
26.3	26.3	Tests in explosive test mixtures	Applies	Applies	Applies
26.4.1	26.4.1	Order of tests	Excluded except when 6.1.2.3a) is applied	Excluded except when 6.1.3 a) is applied.	Excluded except when 6.1.2.3a) is applied
26.4.1.1	26.4.1.1	Metallic enclosures, metallic parts of enclosures and glass parts of enclosures	Excluded except when 6.1.2.3a) is applied	Excluded except when 6.1.3 a) is applied.	Excluded except when 6.1.2.3a) is applied
26.4.1.2	26.4.1.2	Non-metallic enclosures or non-metallic parts of enclosures	Excluded except when 6.1.2.3a) is applied	Excluded except when 6.1.3 a) is applied.	Excluded except when 6.1.2.3a) is applied
26.4.1.2.1	26.4.1.2.1	Group I electrical equipment	Excluded except when 6.1.2.3a) is applied	Excluded	Excluded except when 6.1.2.3a) is applied
26.4.1.2.2	26.4.1.2.2	Group II and Group III electrical equipment	Excluded except when 6.1.2.3a) is applied	Excluded except when 6.1.3 a) is applied.	Excluded except when 6.1.2.3a) is applied
26.4.2	26.4.2	Resistance to impact	Excluded except when 6.1.2.3a) is applied	Excluded except when 6.1.3 a) is applied.	Excluded except when 6.1.2.3a) is applied
26.4.3	26.4.3	Drop test	Applies	Applies	Excluded except when 6.1.2.3a) is applied
26.4.4	26.4.4	Acceptance criteria	~~Excluded except when 6.1.2.3a) is applied~~ Applies	~~Excluded except when 6.1.3 a) is applied.~~ Applies	Excluded except when 6.1.2.3a) is applied
26.4.5	26.4.5	Degree of protection (IP) by enclosures	Applies	Applies	Applies
26.5.1.1	26.5.1.1	General	Applies	Applies	Excluded
26.5.1.2	26.5.1.2	Service temperature	Modified	Modified	Modified
26.5.1.3	26.5.1.3	Maximum surface temperature	Modified	Modified	Modified
26.5.2	26.5.2	Thermal shock test	Excluded except when 6.1.2.3a) is applied	Excluded except when 6.1.3 a) is applied.	Excluded except when 6.1.2.3a) is applied
26.5.3	26.5.3	Small component ignition test (Group I and Group II)	Applies	Excluded	Excluded
26.6	26.6	Torque test for bushings	Excluded	Excluded	Excluded
26.7	26.7	Non-metallic enclosures or non-metallic parts of enclosures	Excluded except when 6.1.2.3a) is applied	Excluded except when 6.1.3 a) is applied.	Excluded except when 6.1.2.3a) is applied
26.8	26.8	Thermal endurance to heat	Excluded except when 6.1.2.3a) is applied	Excluded except when 6.1.3 a) is applied.	Excluded except when 6.1.2.3a) is applied

Documents
Document Sharing Hub

Copyright International Society of Automation

Full document details: ANSI ISA 60079-11-2014

Clause or subclause of ANSI/ISA-60079-0 ~~IEC 60079-0~~,			ANSI/ISA-60079-0 ~~IEC 60079-0~~, clause application to ~~IEC 60079-11~~ ANSI/ISA-60079-11		
			Intrinsically safe apparatus		Associated apparatus
Ed. 5.0 ~~(2007)~~ (informative)	**Ed. 6.0 ~~(2011)~~ (informative)**	**Clause / Subclause title (normative)**	**Group I and Group II**	**Group III**	
26.9	26.9	Thermal endurance to cold	Excluded except when 6.1.2.3a) is applied	Excluded except when 6.1.3 a) is applied.	Excluded except when 6.1.2.3a) is applied
26.10	26.10	Resistance to light	Excluded except when 6.1.2.3a) is applied	Excluded except when 6.1.3 a) is applied.	Excluded except when 6.1.2.3a) is applied
26.11	26.11	Resistance to chemical agents for Group I electrical equipment	Excluded except when 6.1.2.3a) is applied	Excluded	Excluded
26.12	26.12	Earth continuity	Excluded	Excluded	Excluded
26.13	26.13	Surface resistance test of parts of enclosures of non-metallic materials	Applies	Applies	Excluded
26.15	26.14	Measurement of capacitance	Applies	Applies	Excluded
NR	26.15	Verification of ratings of ventilating fans	Excluded	Excluded	Excluded
NR	26.16	Alternative qualification of elastomeric sealing O-rings	Excluded except when 6.1.2.3a) is applied	Excluded except when 6.1.3 a) is applied.	Excluded except when 6.1.2.3a) is applied
27	27	Routine tests	Applies	Applies	Applies
28	28	Manufacturer's responsibility	Applies	Applies	Applies
29	29	Marking	Applies	Applies	Applies
30	30	Instructions	Applies	Applies	Applies
Annex A (Normative)	Annex A (Normative)	Supplementary requirements for cable glands	Excluded	Excluded	Excluded
Annex B (Normative)	Annex B (Normative)	Requirements for Ex Components	Applies	Applies	Applies
Annex C (Informative)	Annex C (Informative)	Example of rig for resistance to impact test	Applies	Applies	Excluded except when 6.1.2.3a) is applied
Annex D (Informative)	NR	Alternative risk assessment method encompassing "equipment protection levels" for Ex equipment	Applies	Applies	Applies
Annex E (Informative)	Annex D (Informative)	Motors supplied by converters	Excluded	Excluded	Excluded
NR	Annex E (Informative)	Temperature rise testing of electric machines	Excluded	Excluded	Excluded

Documents
Document Sharing Hub
Copyright International Society of Automation
Full document details: ANSI ISA 60079-11-2014

Clause or subclause of ANSI/ISA-60079-0 ~~IEC 60079-0~~,			ANSI/ISA-60079-0 ~~IEC 60079-0~~, clause application to ~~IEC 60079-11~~ ANSI/ISA-60079-11		
			Intrinsically safe apparatus		Associated apparatus
Ed. 5.0 ~~(2007)~~ (informative)	**Ed. 6.0 ~~(2011)~~ (informative)**	**Clause / Subclause title (normative)**	**Group I and Group II**	**Group III**	
NR	Annex F (Informative)	Guideline flowchart for tests of non-metallic enclosures or non-metallic parts of enclosures (26.4)	Excluded except when 6.1.2.3a) is applied	Excluded except when 6.1.3 a) is applied.	Excluded except when 6.1.2.3a) is applied

Applies – This requirement of ANSI/ISA-60079-0 ~~IEC 60079-0~~, is applied without change.

Excluded – This requirement of ANSI/ISA-60079-0 ~~IEC 60079-0~~, does not apply.

Excluded except – This requirement of ANSI/ISA-60079-0 ~~IEC 60079-0~~, does not apply except when the conditions stated are met.

Modified – This requirement of ANSI/ISA-60079-0 ~~IEC 60079-0~~, is modified as detailed in this standard.

NR – No requirements.

NOTE 1 The clause numbers in the above table are shown for information only. The applicable requirements of ANSI/ISA-60079-0 ~~IEC 60079-0~~, are identified by the clause title which is normative. This table was written against the specific requirements of ANSI/ISA-60079-0 ~~IEC 60079-0~~, ed. 6.0. The clause numbers for the previous edition are shown for information only. This is to enable the General requirements ANSI/ISA-60079-0 ~~IEC 60079-0~~, ed. 5.0, to be used where necessary with this part of ~~IEC~~ ISA-60079. Where there were no requirements, indicated by NR, or there is a conflict between requirements, the later edition requirements take precedence.

NOTE 2 In the US, the authority having jurisdiction for underground mines is the Mine Safety and Health Administration (MSHA) of the federal government. Additional regulations beyond those detailed here will also apply.

2 ~~Normative~~ ~~r~~References

The following referenced documents are indispensable for the application of this document. For dated references, only the edition cited applies. For undated references, the latest edition of the referenced document (including any amendments) applies.

~~IEC 60079-0, *Explosive atmospheres – Part 0: Equipment – General requirements*~~

ANSI/ISA-60079-0 (12.00.01), Electrical Apparatus for Use in Class I, Zones 0, 1 & 2 Hazardous (Classified) Locations: General Requirements

~~IEC 60079-7, *Explosive atmospheres – Part 7: Equipment protection by increased safety "e"*~~

ANSI/ISA-60079-7 (12.16.01) Electrical Apparatus for Use in Class I, Zone 1 Hazardous (Classified) Locations: Type of Protection - Increased Safety "e"

~~IEC 60079-25, *Explosive atmospheres – Part 25: Intrinsically safe electrical systems*~~

ANSI/ISA-60079-25, *Explosive atmospheres – Part 25: Intrinsically safe electrical systems*

IEC 60085, *Electrical insulation – Thermal evaluation and designation*

Documents
Document Sharing Hub
Copyright International Society of Automation
Full document details: ANSI ISA 60079-11-2014

IEC 60112, *Method for the determination of the proof and the comparative tracking indices of solid insulating materials*

UL746A, *Polymeric Materials B Short Term Property Evaluations, Fifth edition, (Edition Date November 1, 2000)*

IEC 60127 (all parts), *Miniature fuses*

IEC 60317-3, *Specifications for particular types of winding wires – Part 3: Polyester enamelled round copper wire, class 155*

IEC 60317-7, *Specifications for particular types of winding wires – Part 7: Polyimide enamelled round copper wire, class 220*

IEC 60317-8, *Specifications for particular types of winding wires – Part 8: Polyesterimide enamelled round copper winding wire, class 180*

IEC 60317-13, *Specifications for particular types of winding wires – Part 13: Polyester or polyesterimide overcoated with polyamide-imide enamelled round copper wire, class 200*

ANSI/IEC 60529, *Degrees of protection provided by enclosures (IP Code)*

IEC 60664-1:2007, *Insulation coordination for equipment within low-voltage systems – Part 1: Principles, requirements and tests*

IEC 60664-3:2003, *Insulation coordination for equipment within low-voltage systems – Part 3: Use of coating, potting or moulding for protection against pollution*

IEC 61158-2, *Industrial communication networks – Fieldbus specifications – Part 2: Physical layer specification and service definition*

~~IEC 62013-1, *Caplights for use in mines susceptible to firedamp – Part 1: General requirements – Construction and testing in relation to the risk of explosion*~~

IEC 60079-35-1, *Explosive atmospheres Part 35-1: Caplights for use in mines susceptible to firedamp — General requirements — Construction and testing in relation to the risk of explosion*

ANSI/UL 840, Insulation Coordination Including Clearances and Creepage Distances for Electrical Equipment

ANSI/UL 248 (all parts) ~~1~~, *Low-Voltage Fuses* ~~*— Part 1: General Requirements*~~

3 Terms and definitions

For the purposes of this document, the terms and definitions given in ANSI/ISA-60079-0 ~~IEC 60079-0~~, and the following apply.

Copyright International Society of Automation

Documents
Document Sharing Hub

Full document details: ANSI ISA 60079-11-2014

3.1
general

3.1.1
intrinsic safety "i"
type of protection based on the restriction of electrical energy within equipment and of interconnecting wiring exposed to the explosive atmosphere to a level below that which can cause ignition by either sparking or heating effects

3.1.2
associated apparatus
electrical equipment which contains both intrinsically safe circuits and non-intrinsically safe circuits and is constructed so that the non-intrinsically safe circuits cannot adversely affect the intrinsically safe circuits

NOTE Associated apparatus may be either:

a) electrical equipment which has another type of protection listed in ANSI/ISA-60079-0 ~~IEC 60079-0~~ for use in the appropriate explosive atmosphere, or

b) electrical equipment not so protected and which, therefore, is not normally used within an explosive atmosphere, for example a recorder which is not itself in an explosive atmosphere, but is connected to a thermocouple situated within an explosive atmosphere where only the recorder input circuit is intrinsically safe.

3.1.3
intrinsically safe apparatus
electrical equipment in which all the circuits are intrinsically safe circuits

3.1.4
intrinsically safe circuit
circuit in which any spark or any thermal effect produced in the conditions specified in this standard, which include normal operation and specified fault conditions, is not capable of causing ignition of a given explosive atmosphere

3.1.5
simple apparatus
electrical component or combination of components of simple construction with well-defined electrical parameters and which is compatible with the intrinsic safety of the circuit in which it is used

3.2
coating
insulating material such as varnish or dry film laid on the surface of the assembly

NOTE Coating and base material of a printed board form an insulating system that may have properties similar to solid insulation.

[Definition 3.5 of IEC 60664-3]

3.3
conformal coating
electrical insulating material applied as a coating to loaded printed circuit boards to produce a thin layer conforming to the surface in order to provide a protective barrier against deleterious effects from environmental conditions

[Definition 2.1 of IEC 61086-1]

Documents
Document Sharing Hub

Copyright International Society of Automation

Full document details: ANSI ISA 60079-11-2014

3.4
control drawing
drawing or other document that is prepared by the manufacturer for the intrinsically safe or associated apparatus, detailing the electrical parameters to allow for interconnections to other circuits or apparatus

3.5
diode safety barrier
assemblies incorporating shunt diodes or diode chains (including Zener diodes) protected by fuses or resistors or a combination of these, manufactured as an individual apparatus rather than as part of a larger apparatus

3.6
entity concept
method used to determine acceptable combinations of intrinsically safe apparatus and associated apparatus through the use of intrinsically safe parameters assigned to connection facilities

3.7
faults

3.7.1
countable fault
fault which occurs in parts of electrical apparatus conforming to the constructional requirements of ANSI/ISA-60079-11 ~~IEC 60079-11~~

3.7.2
fault
any defect of any component, separation, insulation or connection between components, not defined as infallible by ANSI/ISA-60079-11 ~~IEC 60079-11~~, upon which the intrinsic safety of a circuit depends

3.7.3
non-countable fault
fault which occurs in parts of electrical apparatus not conforming to the constructional requirements of ANSI/ISA-60079-11 ~~IEC 60079-11~~

3.8
fuse rating
I_n
current rating of a fuse as specified in IEC 60127 series, the ANSI/UL 248 series ~~-1~~ or in the manufacturer's specification

3.9
FISCO
abbreviation of Fieldbus Intrinsically Safe Concept

3.10
infallibility

3.10.1
infallible component
infallible assembly of components
component or assembly of components that is considered as not subject to certain fault modes as specified in ANSI/ISA-60079-11 ~~IEC 60079-11~~

Documents
Document Sharing Hub
Copyright International Society of Automation
Full document details: ANSI ISA 60079-11-2014

NOTE The probability of such fault modes occurring in service or storage is considered to be so low that they are not to be taken into account.

3.10.2
infallible connection
connections, including joints and interconnecting wiring and printed circuit board tracks, that are not considered according to ANSI/ISA-60079-11 ~~IEC 60079-11~~ as becoming open-circuited in service or storage

NOTE The probability of such fault modes occurring in service or storage is considered to be so low that they are not to be taken into account.

3.10.3
infallible separation
infallible insulation
separation or insulation between electrically conductive parts that is considered as not subject to short circuits as specified in ANSI/ISA-60079-11 ~~IEC 60079-11~~

NOTE The probability of such fault modes occurring in service or storage is considered to be so low that they are not to be taken into account.

3.11
internal wiring
wiring and electrical connections that are made within the apparatus by its manufacturer

NOTE Within a rack or panel, interconnections between separate pieces of apparatus made in accordance with detailed instructions from the manufacturer are considered to be internal wiring.

3.12
live maintenance
maintenance activities carried out while the associated apparatus, intrinsically safe apparatus and circuits are energized

3.13
electrical parameters

3.13.1
maximum input voltage
U_i
maximum voltage (peak a.c. or d.c.) that can be applied to the connection facilities of apparatus without invalidating the type of protection

3.13.2
maximum input current
I_i
maximum current (peak a.c. or d.c.) that can be applied to the connection facilities of apparatus without invalidating the type of protection

3.13.3
maximum input power
P_i
maximum power that can be applied to the connection facilities of apparatus without invalidating the type of protection

Documents
Document Sharing Hub
Copyright International Society of Automation
Full document details: ANSI ISA 60079-11-2014

3.13.4
maximum internal capacitance
C_i
maximum equivalent internal capacitance of the apparatus which is considered as appearing across the connection facilities

3.13.5
maximum internal inductance
L_i
maximum equivalent internal inductance of the apparatus which is considered as appearing at the connection facilities

3.13.6
maximum internal inductance to resistance ratio
L_i/R_i
maximum value of ratio of inductance to resistance which is considered as appearing at the external connection facilities of the electrical apparatus

3.13.7
maximum output voltage
U_o
maximum voltage (peak a.c. or d.c.) that can appear at the connection facilities of the apparatus at any applied voltage up to the maximum voltage

3.13.8
maximum output current
I_o
maximum current (peak a.c. or d.c.) in apparatus that can be taken from the connection facilities of the apparatus

3.13.9
maximum output power
P_o
maximum electrical power that can be taken from the apparatus

3.13.10
maximum external capacitance
C_o
maximum capacitance that can be connected to the connection facilities of the apparatus without invalidating the type of protection

3.13.11
maximum external inductance
L_o
maximum value of inductance that can be connected to the connection facilities of the apparatus without invalidating the type of protection

3.13.12
maximum external inductance to resistance ratio
L_o/R_o
maximum value of ratio of inductance to resistance that can be connected to the external connection facilities of the electrical apparatus without invalidating intrinsic safety

Documents
Document Sharing Hub
Copyright International Society of Automation
Full document details: ANSI ISA 60079-11-2014

3.13.13
maximum r.m.s. a.c. or d.c. voltage
***U*m**
maximum voltage that can be applied to the non intrinsically safe connection facilities of associated apparatus without invalidating the type of protection

NOTE 1 This additionally applies to the maximum voltage that can be applied to non-intrinsically safe connection facilities of intrinsically safe apparatus (for example, charging connections on battery operated apparatus, where charging is only done in the non-hazardous area).

NOTE 2 The value of Um may be different at different sets of connection facilities, and may be different for a.c. and d.c. voltages.

3.14
overvoltage category
numeral defining a transient overvoltage condition

[Definition 1.3.10 of IEC 60664-1]

NOTE Overvoltage categories I, II, III and IV are used, see 2.2.2.1 of IEC 60664-1.

3.15
pollution degree
numeral characterizing the expected pollution of the micro-environment

[Definition 1.3.13 of IEC 60664-1]

NOTE Pollution degrees 1, 2, 3 and 4 are used.

3.16
protective extra-low voltage
PELV
extra-low voltage system which is not electrically separated from earth but which otherwise satisfies the requirements for SELV

NOTE A 50 V centre-tapped earth system is a PELV system.

3.17
rated insulation voltage
r.m.s. withstand voltage value assigned by the manufacturer to the equipment or to a part of it, characterizing the specified (long-term) withstand capability of its insulation

[Definition 1.3.9.1 of IEC 60664-1]

NOTE The rated insulation voltage is not necessarily equal to the rated voltage of equipment which is primarily related to functional performance.

3.18
recurring peak voltage
maximum peak value of periodic excursions of the voltage waveform resulting from distortions of an a.c. voltage or from a.c. components superimposed on a d.c. voltage

NOTE Random overvoltages, for example due to occasional switching, are not considered as recurring peak voltages.

Documents
Document Sharing Hub

Copyright International Society of Automation

Full document details: ANSI ISA 60079-11-2014

3.19
safety extra-low voltage
SELV
extra-low voltage system (i.e. normally not exceeding 50 V a.c. or 120 V ripple-free d.c.) electrically separated from earth and from other systems in such a way that a single fault cannot give rise to an electric shock

NOTE A 50 V earth free system is a SELV system.

3.20
encapsulation
encapsulate
process of applying a compound to enclose or placing in or as if in a capsule

3.21
casting
process of pouring a liquid compound at normal ambient pressure into a cast

3.22
moulding
process of placing an object in a tool with a shaping cavity and with plastic material being introduced around the inserted component with pressure applied to either partially or totally encapsulate the inserted component

NOTE This process may also be referred to as injection moulding, over-moulding or insert moulding.

3.23
galvanic isolation
arrangement within an apparatus which permits the transfer of signal or power between two circuits without any direct electrical connection between the two

NOTE Galvanic isolation frequently utilizes either magnetic (transformer or relay) or optocoupled elements.

4 Grouping and classification of intrinsically safe apparatus and associated apparatus

Intrinsically safe and associated apparatus which has a type of protection listed in ANSI/ISA-60079-0 ~~IEC 60079-0~~ for use in the appropriate explosive atmosphere, shall be grouped in accordance with equipment grouping requirements of ANSI/ISA-60079-0 ~~IEC 60079-0~~and shall have a maximum surface temperature or temperature class assigned in accordance with the temperature requirements of ANSI/ISA-60079-0 ~~IEC 60079-0~~.

Associated apparatus which has ~~no such~~ a type of protection listed in ANSI/ISA-60079-0 but not suitable to be located in the explosive atmosphere shall only be grouped in accordance with the equipment grouping requirements of ANSI/ISA-60079-0 ~~IEC 60079-0~~.

Documents
Document Sharing Hub
Copyright International Society of Automation
Full document details: ANSI ISA 60079-11-2014

5 Levels of protection and ignition compliance requirements of electrical apparatus

5.1 General

Intrinsically safe apparatus and intrinsically safe parts of associated apparatus shall be placed in Levels of Protection "ia", "ib" or “ic”.

The requirements of this standard shall apply to all levels of protection unless otherwise stated. In the determination of level of protection “ia", "ib" or “ic”, failure of components and connections shall be considered in accordance with 7.6. Failure of separations between conductive parts shall be considered in accordance with 6.3. The determination shall include opening, shorting and earthing of the external intrinsically safe connection facilities in accordance with 6.2.

The intrinsically safe parameters for the intrinsically safe apparatus and associated apparatus shall be determined taking into account the requirements for spark ignition compliance of 5.5 and thermal ignition compliance of 5.6.

For circuits of associated apparatus which are connected to safety extra low-voltage circuits (SELV) or protective extra low-voltage circuits (PELV) circuits, U_m shall only be applied as a ‘common mode’ voltage, with the nominal operating voltage applied for the differential mode signal between the circuit conductors. (Typical examples are RS-232, RS-485 or 4-20 mA circuits). ~~The certificate number for~~ Associated apparatus relying on SELV or PELV circuits ~~shall include the "X" suffix in accordance with the marking requirements of IEC 60079-0 and the specific conditions of use listed on the certificate~~ shall detail ~~the~~ any special precautions necessary for installation.

Where live maintenance procedures are specified by the manufacturer in the documentation provided, the effects of this live maintenance shall not invalidate intrinsic safety and this shall be considered during the testing and assessment.

NOTE 1 Apparatus may be specified with more than one level of protection, and may have different parameters for each level of protection.

NOTE 2 For the application of U_m, U_i in the following clauses, any voltage up to the maximum voltage may be applied for the assessment.

5.2 Level of protection "ia"

With U_m and U_i applied, the intrinsically safe circuits in electrical apparatus of level of protection "ia" shall not be capable of causing ignition in each of the following circumstances:

a) in normal operation and with the application of those non-countable faults which give the most onerous condition;

b) in normal operation and with the application of one countable fault plus those non-countable faults which give the most onerous condition;

c) in normal operation and with the application of two countable faults plus those non-countable faults which give the most onerous condition.

The non-countable faults applied may differ in each of the above circumstances.

In testing or assessing the circuits for spark ignition, the following safety factors shall be applied in accordance with 10.1.4.2:

– for both a) and b) 1,5

Documents
Document Sharing Hub

Copyright International Society of Automation

Full document details: ANSI ISA 60079-11-2014

– for c) 1,0

The safety factor applied to voltage or current for determination of surface temperature classification shall be 1,0 in all cases.

If only one countable fault can occur, the requirements of a) and b) shall be considered to give a level of protection of "ia" if the test requirements for "ia" can then be satisfied. If no countable faults can occur the requirements of a) shall be considered to give a level of protection of "ia" if the test requirements for "ia" can then be satisfied.

5.3 Level of protection "ib"

With U_m and U_i applied, the intrinsically safe circuits in electrical apparatus of level of protection "ib" shall not be capable of causing ignition in each of the following circumstances:

a) in normal operation and with the application of those non-countable faults which give the most onerous condition;

b) in normal operation and with the application of one countable fault plus the application of those non-countable faults which give the most onerous condition.

The non-countable faults applied may differ in each of the above circumstances.

In testing or assessing the circuits for spark ignition, a safety factor of 1,5 shall be applied in accordance with 10.1.4.2. The safety factor applied to the voltage or current for the determination of surface temperature classification shall be 1,0 in all cases.

If no countable fault can occur the requirements of a) shall be considered to give a level of protection of "ib" if the test requirements for "ib" can be satisfied.

5.4 Level of protection "ic"

With U_m and U_i applied, the intrinsically safe circuits in electrical apparatus of level of protection "ic" shall not be capable of causing ignition in normal operation and under the conditions specified in this standard.

In testing or assessing the circuits for spark ignition, a safety factor of 1,0 shall be applied in accordance with 10.1.4.2. The safety factor applied to the voltage or current for the determination of surface temperature classification shall be 1,0.

NOTE The concept of countable faults does not apply to this level of protection. Infallible components and assemblies, as in Clause 8, are not applicable. For level of protection “ic”, the term ‘infallible’ should be read as ‘meeting the requirements of 7.1’.

5.5 Spark ignition compliance

The circuit shall be assessed and/or tested for the successful limitation of the spark energy that may be capable of causing ignition of the explosive atmosphere, at each point where an interruption or interconnection may occur, in accordance with 10.1.

For Group III, the spark ignition tests to the requirements of Group IIB shall be applied to circuits exposed to dust.

Documents
Document Sharing Hub

Copyright International Society of Automation

Full document details: ANSI ISA 60079-11-2014

5.6 Thermal ignition compliance

5.6.1 General

All surfaces of components, enclosures, wiring and the tracks on printed circuit boards which may come in contact with explosive atmospheres shall be assessed and/or tested for the maximum temperature. The maximum temperature allowable after the application of faults, as provided in 5.2, 5.3 and 5.4, shall be in accordance with the temperature requirements of ANSI/ISA-60079-0 ~~IEC 60079-0~~. Tests, when required, are specified in 10.2.

NOTE 1 The requirements of this clause are not applicable to associated apparatus protected by another type of protection listed in ~~IEC 60079-0~~ ANSI/ISA-60079-0 or located outside the hazardous area.

NOTE 2 Care should be taken in the selection of materials to be used adjacent to components that could exhibit excessive temperatures such as cells, batteries, or components that could dissipate power greater than 1,3 W, under the fault conditions defined in Clause 5, to prevent the secondary ignition of the explosive atmosphere by for example, heating or burning of the printed circuit boards, coatings or component packaging.

5.6.2 Temperature for small components for Group I and Group II

Requirements for temperatures of small components used in Group I or Group II equipment are provided in the small component temperature for Group I or Group II electrical equipment requirements of ANSI/ISA-60079-0 ~~IEC 60079-0~~ and the test requirements are provided in the small component ignition test of ANSI/ISA-60079-0 ~~IEC 60079-0~~.

The 5 K and 10 K margin of safety required by the maximum surface temperature requirements of ANSI/ISA-60079-0 ~~IEC 60079-0~~ does not apply to the maximum surface temperature values, 200 °C, 275 °C and 950 °C shown in the table for the assessment of temperature classification according to component size at 40 °C ambient temperature in ANSI/ISA-60079-0 ~~IEC 60079-0~~.

NOTE Where a catalytic or other chemical reaction can result specialist advice should be sought.

5.6.3 Wiring within intrinsically safe apparatus for Group I and Group II

The maximum permissible current corresponding to the maximum wire temperature due to self-heating shall either be taken from Table 2 for copper wires, or can be calculated from the following equation for metals in general.

$$I = I_f \left[\frac{t(1+aT)}{T(1+at)} \right]^{1/2}$$

where

- a is the temperature coefficient of resistance of the wire material (0,004 284 K^{-1} for copper, 0,004 201 K^{-1} for gold);
- I is the maximum permissible current r.m.s., in amperes;
- I_f is the current at which the wire melts at the maximum specified ambient temperature, in amperes;
- T is the melting temperature of the wire material in degrees Celsius (1 083 °C for copper, 1 064 °C for gold);

Copyright International Society of Automation

Documents
Document Sharing Hub

Full document details: ANSI ISA 60079-11-2014

t is the threshold temperature, in degrees Celsius, of the applicable temperature class. The value of *t* is the wire temperature due to self-heating and ambient temperature.

Example: fine copper wire (Temperature class =T4)

a = 0,004 284 K^{-1}

I_f = 1,6 A (determined experimentally or specified by the wire manufacturer)

T = 1 083 °C

t for T4 (small component, $t \leq 275$ °C)

Applying the equation

I = 1,3 A (This is the maximum normal or fault current which may be allowed to flow to prevent the wire temperature from exceeding 275 °C.)

Table 2 – Temperature classification of copper wiring (in a maximum ambient temperature of 40 °C)

Diameter (see Note 4) mm	**Cross-sectional area** (see Note 4) mm^2	**Maximum permissible current for temperature classification** A		
		T1 to T4 and Group I	**T5**	**T6**
0,035	0,000 962	0,53	0,48	0,43
0,05	0,001 96	1,04	0,93	0,84
0,1	0,007 85	2,1	1,9	1,7
0,2	0,031 4	3,7	3,3	3,0
0,35	0,096 2	6,4	5,6	5,0
0,5	0,196	7,7	6,9	6,7

NOTE 1 The value given for maximum permissible current, in amperes, is the r.m.s. a.c. or d.c. value.

NOTE 2 For stranded conductors, the cross-sectional area is taken as the total area of all strands of the conductor.

NOTE 3 The table also applies to flexible flat conductors, such as in ribbon cable, but not to printed circuit conductors for which see 5.6.4.

NOTE 4 Diameter and cross-sectional area are the nominal dimensions specified by the wire manufacturer.

NOTE 5 Where the maximum power does not exceed 1,3 W the wiring can be assigned a temperature classification of T4 and is acceptable for Group I. For Group I where dust is excluded, a maximum power of 3,3 W is permitted for ambient temperatures of up to 40 °C. Refer to ~~IEC 60079-0~~ ANSI/ISA-60079-0, Table 3a) and 3b) where derating is required for ambient temperatures greater than 40 °C.

5.6.4 Tracks on printed circuit boards for Group I and Group II

The temperature classification of tracks of printed circuit boards shall be determined using available data or by actual measurement.

Where the tracks are made of copper, the temperature classification may be determined using Table 3.

Documents
Document Sharing Hub
Copyright International Society of Automation
Full document details: ANSI ISA 60079-11-2014

For example, on printed circuit boards of at least 0,5 mm thickness, having a conducting track of at least 33 μm thickness on one or both sides, by applying factors given in Table 3, a temperature classification of T4 or Group I shall be given to the printed tracks if they have a minimum width of 0,3 mm and the continuous current in the tracks does not exceed 0,444 A. Similarly, for minimum track widths of 0,5 mm, 1,0 mm and 2,0 mm, T4 shall be given for corresponding maximum currents of 0,648 A, 1,092 A and 1,833 A respectively.

Track lengths of 10 mm or less shall be disregarded for temperature classification purposes.

Where temperature classification of a track is to be experimentally determined, the maximum continuous current shall be used.

Manufacturing tolerances shall not reduce the values stated in this clause by more than 10 % or 1 mm, whichever is the smaller.

In the absence of testing, where the maximum power does not exceed 1,3 W, the tracks are suitable for a temperature classification of T4 or Group I.

In the absence of testing, where dust is excluded and the maximum power does not exceed 3,3 W, the tracks are suitable for Group I.

Refer to the assessment of temperature classification for component surface areas ≥ 20 mm^2 table in ANSI/ISA-60079-0 ~~IEC 60079-0~~. Variation in maximum power dissipation with ambient temperature in ANSI/ISA-60079-0 ~~IEC 60079-0~~ where a derating is required for ambient temperatures greater than 40 °C.

Table 3 – Temperature classification of tracks on printed circuit boards (in a maximum ambient temperature of 40 °C)

Minimum track width	Maximum permissible current for temperature classification		
	T1 to T4 and Group I	T5	T6
mm	A	A	A
0,075	0,8	0,6	0,5
0,1	1,0	0,8	0,7
0,125	1,2	1,0	0,8
0,15	1,4	1,1	1,0
0,2	1,8	1,4	1,2
0,3	2,4	1,9	1,7
0,4	3,0	2,4	2,1
0,5	3,5	2,8	2,5
0,7	4,6	3,5	3,2
1,0	5,9	4,8	4,1
1,5	8,0	6,4	5,6
2,0	9,9	7,9	6,9
2,5	11,6	9,3	8,1
3,0	13,3	10,7	9,3
4,0	16,4	13,2	11,4
5,0	19,3	15,5	13,5
6,0	22,0	17,7	15,4
NOTE The value given for maximum permissible current, in amperes, is the r.m.s. a.c. or d.c. value.			

Documents
Document Sharing Hub

Copyright International Society of Automation

Full document details: ANSI ISA 60079-11-2014

Minimum track width	Maximum permissible current for temperature classification		
	T1 to T4 and Group I	T5	T6
mm	A	A	A

This table applies to printed boards 1,6 mm or thicker with a single layer of copper of 33 μm thickness

For boards with a thickness between 0,5 mm and 1,6 mm, divide the maximum current specified by 1,2.

For boards with conducting tracks on both sides, divide the maximum current specified by 1,5.

For multilayer boards, for the track layer under consideration, divide the maximum current specified by 2.

For 18 μm copper thickness, divide the maximum current by 1,5.

For 70 μm copper thickness, multiply the maximum current by 1,3.

For tracks passing under components dissipating 0,25 W or more either normally or under fault conditions, divide the maximum current specified by 1,5.

At terminations of components dissipating 0,25 W or more either normally or under fault conditions, and for 1,00 mm along the conductor, either multiply the track width by 3 or divide the maximum current specified by 2. Additionally, if the track goes under the component, apply the factor specified for tracks passing under components dissipating 0.25W or more.

For ambient temperature up to 60 °C, divide the maximum current by 1,2.

For ambient temperature up to 80 °C, divide the maximum current by 1,3.

5.6.5 Intrinsically safe apparatus and component temperature for Group III

For determination of maximum surface temperature for intrinsically safe apparatus of Group III, refer to ANSI/ISA-60079-0 ~~IEC 60079-0~~, temperature measurement. In particular the measurement shall be made using the specified values of U_i and I_i for the intrinsically safe apparatus without a 10 % safety factor. The temperature shall be that of the surface of the intrinsically safe apparatus that is in contact with the dust. For example, for intrinsically safe apparatus protected by enclosure of at least IP5X, the surface temperature of the enclosure shall be measured.

Alternatively intrinsically safe apparatus shall be considered suitable for total immersion, or an uncontrolled dust layer thickness, if the matched power dissipation in any component is in accordance with Table 4, and the continuous short-circuit current is less than 250 mA. The intrinsically safe apparatus shall be marked T135 °C.

Table 4 – Maximum permitted power dissipation within a component immersed in dust

Maximum ambient temperature	°C	40	70	100
Permitted power	mW	750	650	550

5.7 Simple apparatus

The following shall be considered to be simple apparatus:

a) passive components, for example switches, junction boxes, resistors and simple semiconductor devices;

Documents
Document Sharing Hub
Copyright International Society of Automation
Full document details: ANSI ISA 60079-11-2014

b) sources of stored energy consisting of single components in simple circuits with well-defined parameters, for example capacitors or inductors, whose values shall be considered when determining the overall safety of the system;

c) sources of generated energy, for example thermocouples and photocells, which do not generate more than 1,5 V, 100 mA and 25 mW.

Simple apparatus shall conform to all relevant requirements of this standard with the exception of Clause 12. The manufacturer or intrinsically safe system designer shall demonstrate compliance with this clause, including material data sheets and test reports, if applicable.

The following aspects shall always be considered:

- simple apparatus shall not achieve safety by the inclusion of voltage and/or current-limiting and/or suppression devices;
- simple apparatus shall not contain any means of increasing the available voltage or current, for example DC-DC converters;
- where it is necessary that the simple apparatus maintains the integrity of the isolation from earth of the intrinsically safe circuit, it shall be capable of withstanding the test voltage to earth in accordance with 6.3.13. Its terminals shall conform to 6.2.1;
- non-metallic enclosures and enclosures containing light metals when located in the explosive atmosphere shall conform to the electrostatic charges on external non-metallic materials requirements and metallic enclosures and parts of enclosures requirements of ANSI/ISA-60079-0~~IEC 60079-0~~;
- when simple apparatus is located in the explosive atmosphere, the maximum surface temperature shall be assessed. When used in an intrinsically safe circuit within their normal rating and at a maximum ambient temperature of 40 °C, switches, plugs, sockets and terminals will have a maximum surface temperature of less than 85 °C, so they can be allocated a T6 temperature classification for Group II applications and are also suitable for Group I and Group III applications. For other types of simple apparatus the maximum temperature shall be assessed in accordance with 5.6 of this standard.

Where simple apparatus forms part of an apparatus containing other electrical circuits, the whole shall be assessed according to the requirements of this standard.

NOTE 1 Sensors which utilize catalytic reaction or other electro-chemical mechanisms are not normally simple apparatus. Specialist advice on their application should be sought.

NOTE 2 It is not a requirement of this standard that the conformity of the manufacturer's specification of the simple apparatus needs to be verified.

6 Apparatus construction

NOTE The requirements given in this clause apply, unless otherwise stated in the relevant subclauses, only to those features of intrinsically safe apparatus and associated apparatus which contribute to this type of protection.

For example, the requirements for encapsulation with casting compound apply only if encapsulating is required to satisfy 6.3.5 or 6.6.

6.1 Enclosures

6.1.1 General

Where intrinsic safety can be impaired by ingress of moisture or dust or by access to conducting parts, for example if the circuits contain infallible creepage distances, an enclosure is necessary.

Documents
Document Sharing Hub
Copyright International Society of Automation
Full document details: ANSI ISA 60079-11-2014

The degree of protection required will vary according to the intended use; for example, a degree of protection of IP54 in accordance with IEC 60529 may be required for Group I apparatus.

The "enclosure" need not be physically the same for protection against contact with live parts and the ingress of solid foreign bodies and liquids.

The designation of the surfaces which form the boundaries of the enclosure shall be the responsibility of the manufacturer and shall be recorded in the definitive documentation (see Clause 13)

6.1.2 Enclosures for Group I or Group II apparatus

6.1.2.1 General

Intrinsically safe and associated apparatus which rely on the spacings in Table 5 or Annex F shall be provided with an enclosure meeting the requirements of 6.1.2.2 or 6.1.2.3 as applicable.

6.1.2.2 Apparatus complying with Table 5

Apparatus meeting the separation requirements of Table 5 shall be provided with an enclosure meeting the requirements of IP20 in accordance with IEC 60529 or greater according to the intended use and environmental conditions.

The enclosure does not need to be subjected to the tests for enclosures in ANSI/ISA-60079-0 ~~IEC 60079-0~~; however for portable apparatus, the drop test of ANSI/ISA-60079-0 ~~IEC 60079-0~~ still applies.

6.1.2.3 Apparatus complying with Annex F

Apparatus meeting the separation requirements of Tables F.1 or F.2 shall be provided with protection to achieve pollution degree 2. This can be achieved by one of the following:

a) an enclosure meeting the requirements of IP54 or greater according to the intended use and environmental conditions in accordance with IEC 60529. For such enclosures the clauses of ANSI/ISA-60079-0~~IEC 60079-0~~ identified in Table 1 additionally apply.

b) an enclosure meeting the requirements of IP20 or greater according to the intended use and environmental conditions in accordance with IEC 60529 provided that separations are obtained by using coating type 1 or type 2 or casting compound or through solid insulation. The enclosure does not need to be subjected to the tests for enclosures in ANSI/ISA-60079-0 ~~IEC 60079-0~~; however for portable apparatus, the drop test of ANSI/ISA-60079-0~~IEC 60079-0~~ still applies.

c) an enclosure meeting the requirements of IP20 and by restricted installation, provided that the restricted installation requirements shall be specified in the documentation ~~as Specific Conditions of Use and the certificate number shall include the "X" suffix in accordance with the marking requirements of IEC 60079-0 and the Specific Conditions of Use listed on the certificate shall detail the installation requirements~~.

6.1.3 Enclosures for Group III apparatus

Where the intrinsic safety of intrinsically safe apparatus can be impaired by ingress of dust or by access to conducting parts, for example if the circuits contain infallible creepage distances, an enclosure is necessary by one of the following:

Documents
Document Sharing Hub
Copyright International Society of Automation
Full document details: ANSI ISA 60079-11-2014

a) Where separation is accomplished by meeting the requirements for clearance or creepage distances of Table 5 or Annex F, the enclosure shall provide a degree of protection of at least IP5X, according to IEC 60529. For such enclosures the 6.1.2.3 a) shall additionally apply.

b) Where separation is accomplished by meeting the requirements for distances under coating, casting compound or separation distances through solid insulation of Table 5 or Annex F, the enclosure shall provide a degree of protection of at least IP2X, according to IEC 60529. The enclosure does not need to be subjected to the tests for enclosures in ANSI/ISA-60079-0~~IEC 60079-0~~; however for portable apparatus, the drop test of ANSI/ISA-60079-0~~IEC 60079-0~~ still applies.

Enclosures for Group III associated apparatus shall meet the requirements of 6.1.2.

6.2 Facilities for connection of external circuits

6.2.1 Terminals

In addition to satisfying the requirements of 6.3, terminals for intrinsically safe circuits shall be separated from terminals for non-intrinsically safe circuits by one or more of the methods given in a) or b).

These methods of separation shall also be applied where intrinsic safety can be impaired by external wiring which, if disconnected from the terminal, can come into contact with conductors or components.

NOTE 1 Terminals for connection of external circuits to intrinsically safe apparatus and associated apparatus should be so arranged that components will not be damaged when making the connections.

a) When separation is accomplished by distance then the clearance between bare conducting parts of terminals shall be at least 50 mm.

NOTE 2 Care should be exercised in the layout of terminals and in the wiring method used so that contact between circuits is unlikely if a wire becomes dislodged.

b) When separation is accomplished by locating terminals for intrinsically safe and non-intrinsically safe circuits in separate enclosures or by use of either an insulating partition or an earthed metal partition between terminals with a common cover, the following applies:

1) partitions used to separate terminals shall extend to within 1,5 mm of the enclosure walls, or alternatively shall provide a minimum distance of 50 mm between the bare conducting parts of terminals when measured in any direction around the partition;

2) metal partitions shall be earthed and shall have sufficient strength and rigidity to ensure that they are not likely to be damaged during field wiring. Such partitions shall be at least 0,45 mm thick or shall conform to 10.6.3 if of lesser thickness. In addition, metal partitions shall have sufficient current-carrying capacity to prevent burn-through or loss of earth connection under fault conditions;

3) non-metallic insulating partitions shall have an appropriate CTI, sufficient thickness and shall be so supported that they cannot readily be deformed in a manner that would defeat their purpose. Such partitions shall be at least 0,9 mm thick, or shall conform to 10.6.3 if of lesser thickness.

The clearances and creepage distances between the bare conducting parts of terminals of separate intrinsically safe circuits and to earthed or potential-free conducting parts shall be equal to or exceed the values given in Table 5.

Where separate intrinsically safe circuits are being considered, the clearance distance between bare conducting parts of external connection facilities shall meet the following:

Documents
Document Sharing Hub
Copyright International Society of Automation
Full document details: ANSI ISA 60079-11-2014

– at least 6 mm between the separate intrinsically safe circuits;
– at least 3 mm from earthed parts, if connection to earth has not been considered in the safety analysis.

See Figure 1 when measuring distances around solid insulating walls or partitions. Any possible movement of metallic parts that are not rigidly fixed shall be taken into account.

Documents
Document Sharing Hub
Copyright International Society of Automation
Full document details: ANSI ISA 60079-11-2014

Dimensions in millimetres

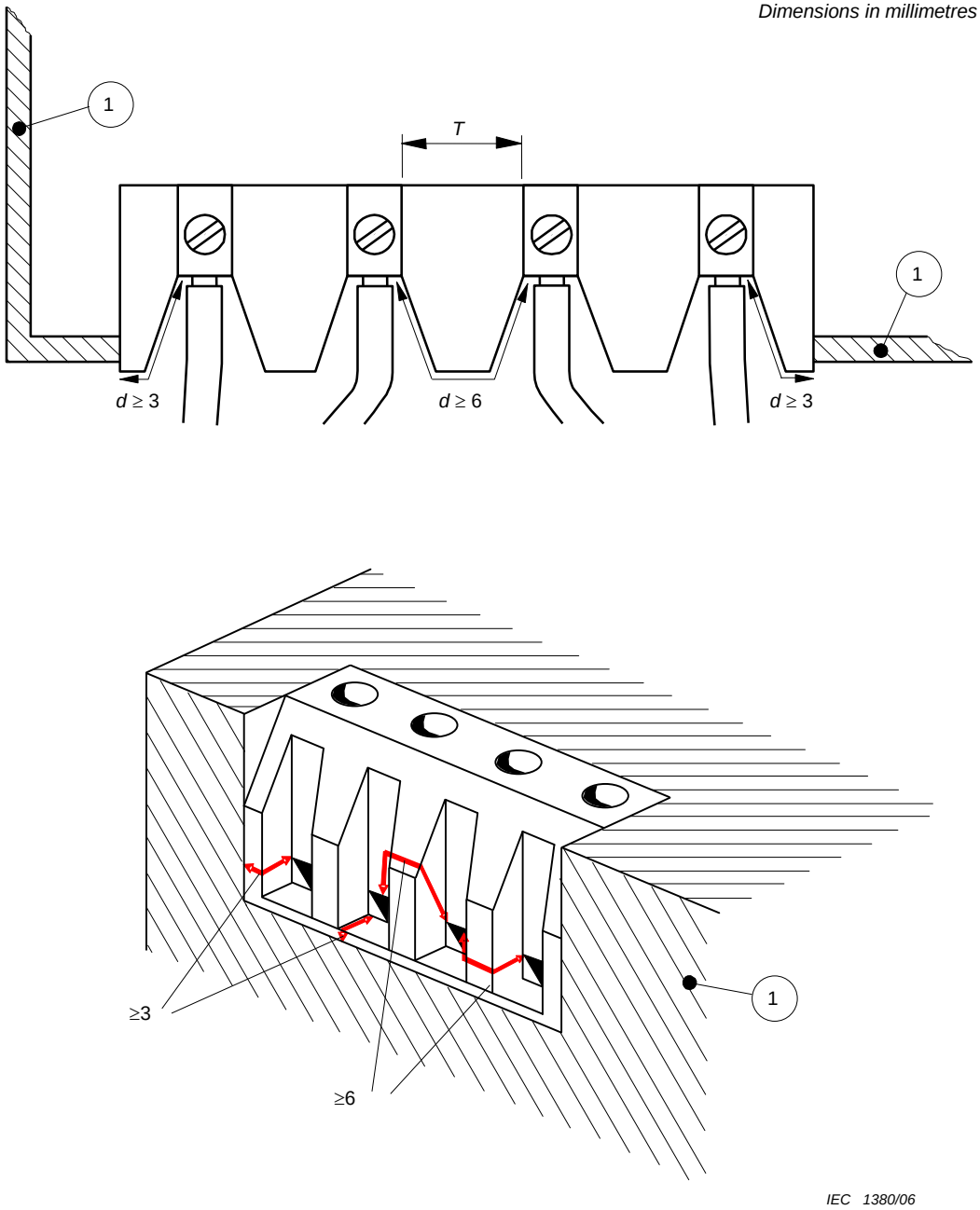

Key

1 Conductive cover

T Distances in accordance with 6.3

d Clearance distance at external connection facilities of terminals in accordance with 6.2.1

NOTE The dimensions shown are the creepage and clearance distances around the insulation as indicated above, not the thickness of the insulation.

Figure 1a – Distance requirements for terminals carrying separate intrinsically safe circuits

Copyright International Society of Automation

Documents
Document Sharing Hub

Full document details: ANSI ISA 60079-11-2014

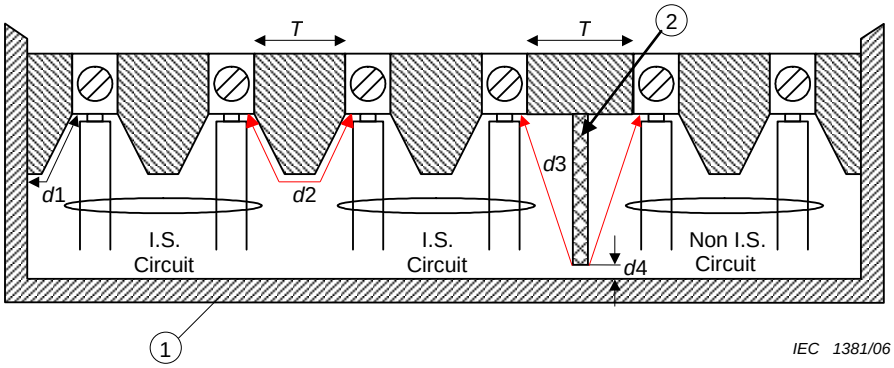

Key

1 Cover: non-conductive, or conductive and earthed

2 Partition in accordance with 6.2.1b); in this example, it shall be homogeneous with the base or cemented to it.

T Distances in accordance with 6.3

*d*1 ≥ 3 mm; when cover is conductive and earthed

*d*2 ≥ 6 mm

*d*3 ≥ 50 mm or *d*4 ≤ 1,5 mm

NOTE The dimensions shown are the clearance distances around the insulation, as indicated above, not the thickness of the insulation.

Figure 1b – Example of separation of intrinsically safe and non-intrinsically safe terminals through use of a partition

Figure 1 – Separation of intrinsically safe and non-intrinsically safe terminals

6.2.2 Plugs and sockets

Plugs and sockets used for connection of external intrinsically safe circuits shall be separate from and non-interchangeable with those for non-intrinsically safe circuits.

Where intrinsically safe or associated apparatus is fitted with more than one plug and socket for external connections and interchange could adversely affect the type of protection, such plugs and sockets shall either be arranged, for example by keying, so that interchange is not possible, or mating plugs and sockets shall be identified, for example by marking or colour coding, to make interchanging obvious.

Where a plug or a socket is not prefabricated with its wires, the connecting facilities shall conform to 6.2.1. If, however, the connections require the use of a special tool, for example by crimping, such that there is no possibility of a strand of wire becoming free, then the connection facilities need only conform to Table 5.

Where a connector carries earthed circuits and the type of protection depends on the earth connection then the connector shall be constructed in accordance with 6.5.

Documents
Document Sharing Hub
Copyright International Society of Automation
Full document details: ANSI ISA 60079-11-2014

6.2.3 Determination of maximum external inductance to resistance ratio (L_O/R_O) for resistance limited power source

The maximum external inductance to resistance ratio (L_O/R_O) which may be connected to a resistance limited power source shall be calculated using the following formula. This formula takes account of a 1,5 factor of safety on current and shall not be used where C_S for the output terminals of the apparatus exceeds 1 % of C_O.

$$\frac{L_O}{R_O} = \frac{8eR_S + (64e^2R_S{}^2 - 72U_O{}^2 eL_S)^{1/2}}{4{,}5U_O{}^2} \quad \text{H/}\Omega$$

where

e is the minimum spark-test apparatus ignition energy in joules, and is for

- Group I apparatus: 525 μJ
- Group IIA apparatus: 320 μJ
- Group IIB apparatus: 160 μJ
- Group IIC apparatus: 40 μJ

R_S is the minimum output resistance of the power source, in ohms;

U_O is the maximum open circuit voltage, in volts;

L_S is the maximum inductance present at the power source terminals, in henries.

C_S is the maximum capacitance present at the power source terminals, in farads

If $L_s = 0$

then
$$\frac{L_O}{R_O} = \frac{32eR_S}{9U_O{}^2} \quad \text{H/}\Omega$$

Where a safety factor of 1 is required, this value for L_O/R_O shall be multiplied by 2,25.

NOTE 1 The normal application of the L_O/R_O ratio is for distributed parameters, for example cables. Its use for lumped values for inductance and resistance requires special consideration.

NOTE 2 L_O/R_O may be determined experimentally for non-linear power sources by testing the circuit with several discrete values of L_O and R_O using the spark tests in 10.1. The values of R_O used should range from practically a short circuit (maximum I_O) to practically open circuit (I_O nearly zero) and a trend established that ensures that the L_O/R_O will not result in failure of the spark test.

6.2.4 Permanently connected cable

Apparatus which is constructed with an integral cable for external connections shall be subjected to the pull test in 10.9 on the cable if breakage of the terminations inside the apparatus could result in intrinsic safety being invalidated, for example where there is more than one intrinsically safe circuit in the cable and breakage could lead to an unsafe interconnection.

6.2.5 Requirements for connections and accessories for IS apparatus when located in the non-hazardous area

Intrinsically safe apparatus may be provided with connection facilities that are restricted to use in a non-hazardous area e.g. data downloading and battery charging connections. Such facilities

Documents
Document Sharing Hub
Copyright International Society of Automation
Full document details: ANSI ISA 60079-11-2014

shall be provided with protection to ensure the ratings of the safety components within the intrinsically safe equipment comply with 7.1. The use of a fuse protected shunt Zener assembly complying with 7.3 and 7.5.2 shall be considered sufficient protection for voltage limitation.

Where these connections are provided for the connection of battery charger see also 7.4.9.

Protection circuitry and components may reside either in the intrinsically safe apparatus or the non-hazardous area equipment. If any part of the protection circuit is located in the non-hazardous area accessory, it shall be assessed in accordance with this standard and the non-hazardous area accessory shall be stated in the documentation.

The maximum voltage U_m that can be applied to these non-hazardous area connections shall be stated in the documentation, and marked on the intrinsically safe apparatus. The U_m at the connection facilities shall be assumed to be the normal mains supply voltage e.g. 250 V a.c. unless marked otherwise.

NOTE 1 If U_m is less than 250 V a.c., this should not be derived from unassessed equipment.

NOTE 2 These requirements do not apply to the use of connections by the manufacturer during production, test, repair or overhaul.

Additionally, the circuit of the intrinsically safe apparatus shall be provided with means to prevent the delivery of ignition-capable energy to these safe area connections when in the hazardous area.

~~NOTE These requirements do not apply to the use of connections by the manufacturer during production, test, repair or overhaul.~~

6.3 Separation distances

6.3.1 General

Requirements for separation distances are given in 6.3.2 to 6.3.14. An alternative method for the dimensioning of separation distances is given in Annex F.

6.3.2 Separation of conductive parts

Separation of conductive parts between

– intrinsically safe and non-intrinsically safe circuits, or
– different intrinsically safe circuits, or
– a circuit and earthed or isolated metal parts,

shall conform to the following if the type of protection depends on the separation.

Separation distances shall be measured or assessed taking into account any possible movement of the conductors or conductive parts. Manufacturing tolerances shall not reduce the distances by more than 10 % or 1 mm, whichever is the smaller.

Separation distances that comply with the values of Table 5 or Annex F under the conditions of 6.1.2.2, 6.1.2.3 or 6.1.3 shall not be subject to a fault.

The fault mode of failure of segregation shall only be a short-circuit.

Documents
Document Sharing Hub
Copyright International Society of Automation
Full document details: ANSI ISA 60079-11-2014

Separation requirements shall not apply where earthed metal, for example tracks of a printed circuit board or a partition, separates an intrinsically safe circuit from other circuits, provided that breakdown to earth does not adversely affect the type of protection and that the earthed conductive part can carry the maximum current that would flow under fault conditions. Creepage distance requirements shall not apply where earthed printed circuit board tracks separate conductive tracks requiring separation, but clearance requirements shall still be applied. Clearance requirements shall not apply where an earthed metallic partition of sufficient height does not allow a discharge between components requiring separation.

NOTE 1 For example, the type of protection does depend on the separation to earthed or isolated metallic parts if a current-limiting resistor can be bypassed by short-circuits between the circuit and the earthed or isolated metallic part.

An earthed metal partition shall have strength and rigidity so that it is unlikely to be damaged and shall be of sufficient thickness and of sufficient current-carrying capacity to prevent burn-through or loss of earth under fault conditions. A partition either shall be at least 0,45 mm thick and attached to a rigid, earthed metal portion of the device, or shall conform to 10.6.3 if of lesser thickness.

Where a non-metallic insulating partition having a thickness and appropriate CTI in accordance with Table 5 is placed between the conductive parts, the clearances, creepage distances and other separation distances shall be measured around the partition provided that either the partition has a thickness of at least 0,9 mm, or conforms to 10.6.3 if of lesser thickness.

NOTE 2 Methods of assessment are given in Annex C.

6.3.2.1 Distances according to Table 5

For Levels of Protection “ia” and “ib”, smaller separation distances, which are less than the values specified in Table 5 but greater than or equal to one-third of that value, shall be considered as subject to countable short-circuit faults if this impairs intrinsic safety.

For Levels of Protection “ia” and “ib”, if separation distances are less than one-third of the values specified in Table 5, they shall be considered as subject to non-countable short-circuit faults if this impairs intrinsic safety.

For Level of Protection “ic”, if separation distances are less than the values specified in Table 5, they shall be considered as short-circuits if this impairs intrinsic safety.

6.3.2.2 Distances according to Annex F

For Levels of Protection “ia” and “ib”, if separation distances are less than the values specified in Annex F, they shall be considered to fault as provided in F.3.1 if this impairs intrinsic safety.

For Level of Protection “ic”, if separation distances are less than the values specified in Annex F, they shall be considered as short-circuits if this impairs intrinsic safety.

Documents
Document Sharing Hub

Copyright International Society of Automation

Full document details: ANSI ISA 60079-11-2014

Table 5 – Clearances, creepage distances and separations

1	2		3		4		5		6		7	
Voltage (peak value) V	**Clearance** mm		**Separation distance through casting compound** mm		**Separation distance through solid insulation** mm		**Creepage distance** mm		**Distance under coating** mm		**Comparative tracking index (CTI)[a)]**	
Level of protection	**ia, ib**	**ic**	**ia, ib**	**ic**	**ia, ib**	**ic**	**ia, ib**	**ic**	**ia, ib**	**ic**	**ia**	**ib, ic**
10	1,5	0,4	0,5	0,2	0,5	0,2	1,5	1,0	0,5	0,3	-	-
30	2,0	0,8	0,7	0,2	0,5	0,2	2,0	1,3	0,7	0,3	100	100
60	3,0	0,8	1,0	0,3	0,5	0,3	3,0	1,9	1,0	0,6	100	100
90	4,0	0,8	1,3	0,3	0,7	0,3	4,0	2,1	1,3	0,6	100	100
190	5,0	1,5	1,7	0,6	0,8	0,6	8,0	2,5	2,6	1,1	175	175
375	6,0	2,5	2,0	0,6	1,0	0,6	10,0	4,0	3,3	1,7	175	175
550	7,0	4,0	2,4	0,8	1,2	0,8	15,0	6,3	5,0	2,4	275	175
750	8,0	5,0	2,7	0,9	1,4	0,9	18,0	10,0	6,0	2,9	275	175
1 000	10,0	7,0	3,3	1,1	1,7	1,1	25,0	12,5	8,3	4,0	275	175
1 300	14,0	8,0	4,6	1,7	2,3	1,7	36,0	13,0	12,0	5,8	275	175
1 575	16,0	10,0	5,3		2,7		49,0	15,0	16,3		275	175
3,3 k		18,0	9,0		4,5			32,0				
4,7 k		22,0	12,0		6,0			50,0				
9,5 k		45,0	20,0		10,0			100,0				
15,6 k		70,0	33,0		16,5			150,0				

a) Evidence of compliance with the CTI requirements of insulating materials shall be provided by the manufacturer. At voltages up to 10 V, the CTI of insulating materials is not required to be specified.

Copyright International Society of Automation

Documents
Document Sharing Hub

Full document details: ANSI ISA 60079-11-2014

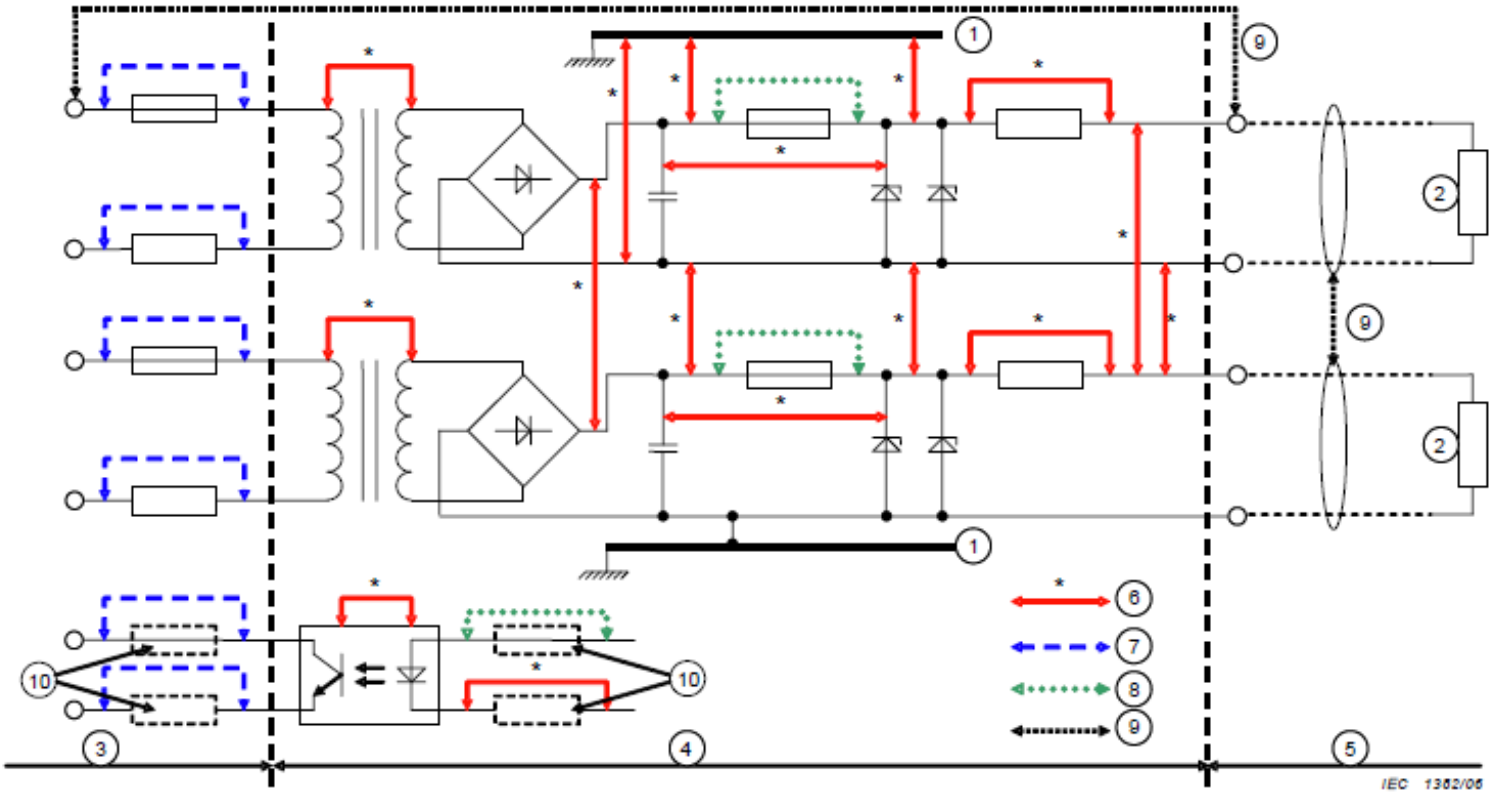

Key

1) Chassis
2) Load
3) Non-intrinsically safe circuit defined by U_m
4) Part of intrinsically safe circuit not itself intrinsically safe
5) Intrinsically safe circuit
6) Dimensions to which Table 5 or Annex F are applicable
7) Dimensions to which general industrial standards are applicable
8) Dimensions to 7.3
9) Dimensions to 6.2.1 for output terminals between separate Intrinsically safe circuits and between Intrinsically safe to non intrinsically safe circuits
10) Protective components as applicable in accordance with 8.9

Figure 2 – Example of separation of conducting parts

Copyright International Society of Automation

Documents
Document Sharing Hub

Full document details: ANSI ISA 60079-11-2014

6.3.3 Voltage between conductive parts

The voltage which is taken into account when using Table 5 or Annex F shall be the voltage between any two conductive parts for which the separation has an effect on the type of protection of the circuit under consideration, that is for example (see Figure 2) the voltage between an intrinsically safe circuit and

– part of the same circuit which is not intrinsically safe, or
– non-intrinsically safe circuits, or
– other intrinsically safe circuits.

The value of voltage to be considered shall be either of the following, as applicable.

a) For circuits which are galvanically separated within the apparatus, the value of voltage to be considered between the circuits, shall be the highest voltage that can appear across the separation when the two circuits are connected together at any one point, derived from
   – the rated voltages of the circuits, or
   – the maximum voltages specified by the manufacturer which may safely be supplied to the circuits, or
   – any voltages generated within the same apparatus.

   Where one of the voltages is less than 20 % of the other, it shall be ignored. Mains supply voltages shall be taken without the addition of standard mains tolerances. For such sinusoidal voltages, peak voltage shall be considered to be the following:

   $\sqrt{2} \times$ r.m.s. value of the rated voltage.

b) Between parts of a circuit: the maximum peak value of the voltage that can occur in either part of that circuit. This may be the sum of the voltages of different sources connected to that circuit. One of the voltages may be ignored if it is less than 20 % of the other.

In all cases voltages which arise during the fault conditions of Clause 5 shall, where applicable, be used to derive the maximum.

Any external voltage shall be assumed to have the value U_m or U_i declared for the connection facilities through which it enters. Transient voltages such as might exist before a protective device, for example a fuse, that opens the circuit shall not be considered when evaluating the creepage distance, but shall be considered when evaluating clearances.

6.3.4 Clearance

Insulating partitions that do not meet the requirements of 6.3.2 shall be ignored, other insulating parts shall conform to column 4 of Table 5.

For voltages higher than 1 575 V peak, an interposing insulating partition or earthed metal partition shall be used. In either case, the partition shall conform to 6.3.2.

6.3.5 Separation distances through casting compound

Casting compound shall meet the requirements of 6.6. For those parts that require encapsulation, the minimum separation distance between encapsulated conductive parts and components, and the free surface of the casting compound shall be at least half the values shown in column 3 of Table 5, with a minimum of 1 mm. When the casting compound is in direct contact with and adheres to an enclosure of solid insulation material conforming to column 4 of Table 5, no other separation is required (see Figure D.1).

Documents
Document Sharing Hub
Copyright International Society of Automation
Full document details: ANSI ISA 60079-11-2014

The insulation of the encapsulated circuit shall conform to 6.3.13.

The failure of a component which is encapsulated or hermetically sealed, for example a semiconductor, which is used in accordance with 7.1 and in which internal clearances and distances through encapsulant are not defined, is to be considered as a single countable fault.

NOTE Further guidance is given in Annex D.

6.3.6 Separation distances through solid insulation

Solid insulation is insulation which is extruded or moulded but not poured. It shall have a dielectric strength that conforms to 6.3.13 when the separation distance is in accordance with Table 5 or Annex F. The maximum current in the insulated wiring shall not exceed the rating specified by the manufacturer of the wire.

NOTE 1 If the insulator is fabricated from two or more pieces of electrical insulating material which are solidly bonded together, then the composite may be considered as solid.

NOTE 2 For the purpose of this standard, solid insulation is considered to be prefabricated, for example sheet or sleeving or elastomeric insulation on wiring.

NOTE 3 Varnish and similar coatings are not considered to be solid insulation.

NOTE 4 Separation between adjacent tracks on intermediate layers of printed circuit boards should be considered as separation distances through solid insulation.

6.3.7 Composite separations

Where separations complying with Table 5 are composite, for example through a combination of air and insulation, the total separation shall be calculated on the basis of referring all separations to one column of Table 5. For example at 60 V:

clearance (column 2) = 6 × separation through solid insulation (column 4);

clearance (column 2) = 3 × separation through casting compound (column 3);

equivalent clearance = actual clearance + (3 × any additional separation through encapsulant) + (6 × any additional separation through solid insulation).

For Levels of Protection “ia” and “ib”, for the separation to be infallible, the above result shall be not less than the clearance value specified in Table 5.

Any clearance or separation which is below one-third of the relevant value specified in Table 5 shall be ignored for the purpose of calculation.

For Level of Protection “ic”, the above results shall not be less than the clearance value specified in Table 5.

6.3.8 Creepage distance

For the creepage distances specified in column 5 of Table 5, the insulating material shall conform to column 7 of Table 5 or Annex F where applicable, which specify the minimum comparative tracking index (CTI) measured in accordance with IEC 60112. The method of measuring or assessing these distances shall be in accordance with Figure 3.

Documents
Document Sharing Hub

Copyright International Society of Automation

Full document details: ANSI ISA 60079-11-2014

Where a joint is cemented, the cement shall have insulation properties equivalent to those of the adjacent material.

Where the creepage distance is made up from the addition of shorter distances, for example where a conductive part is interposed, distances of less than one-third the relevant value in column 5 of Table 5 shall not be taken into account. For voltages higher than 1 575 V peak, an interposing insulating partition or earthed metallic partition shall be used. In either case, the partition shall conform to 6.3.2.

Documents
Document Sharing Hub

Copyright International Society of Automation

Full document details: ANSI ISA 60079-11-2014