Specification for Valves

API SPECIFICATION 6D
TWENTY-FIFTH EDITION, NOVEMBER 2021

API MONOGRAM PROGRAM EFFECTIVE DATE: NOVEMBER 2022

ERRATA 1, DECEMBER 2021
ERRATA 2, APRIL 2022
ERRATA 3, OCTOBER 2023
ADDENDUM 1, APRIL 2023
(API MONOGRAM PROGRAM EFFECTIVE DATE: OCTOBER 2023)
ADDENDUM 2, SEPTEMBER 2024
(API MONOGRAM PROGRAM EFFECTIVE DATE: MARCH 5, 2025)

American Petroleum Institute

Documents
Document Sharing Hub

Full document details: API Spec 6D-2021 (2024)

Special Notes

API publications necessarily address problems of a general nature. With respect to particular circumstances, local, state, and federal laws and regulations should be reviewed. The use of API publications is voluntary. In some cases, third parties or authorities having jurisdiction may choose to incorporate API standards by reference and may mandate compliance.

Neither API nor any of API's employees, subcontractors, consultants, committees, or other assignees make any warranty or representation, either express or implied, with respect to the accuracy, completeness, or usefulness of the information contained herein, or assume any liability or responsibility for any use, or the results of such use, of any information or process disclosed in this publication. Neither API nor any of API's employees, subcontractors, consultants, or other assignees represent that use of this publication would not infringe upon privately owned rights.

API publications may be used by anyone desiring to do so. Every effort has been made by the Institute to assure the accuracy and reliability of the data contained in them; however, the Institute makes no representation, warranty, or guarantee in connection with this publication and hereby expressly disclaims any liability or responsibility for loss or damage resulting from its use or for the violation of any authorities having jurisdiction with which this publication may conflict.

API publications are published to facilitate the broad availability of proven, sound engineering and operating practices. These publications are not intended to obviate the need for applying sound engineering judgment regarding when and where these publications should be utilized. The formulation and publication of API publications is not intended in any way to inhibit anyone from using any other practices.

Any manufacturer marking equipment or materials in conformance with the marking requirements of an API standard is solely responsible for complying with all the applicable requirements of that standard. API does not represent, warrant, or guarantee that such products do in fact conform to the applicable API standard.

Users of this specification should not rely exclusively on the information contained in this document. Sound business, scientific, engineering, and safety judgment should be used in employing the information contained herein.

All rights reserved. No part of this work may be reproduced, translated, stored in a retrieval system, or transmitted by any means, electronic, mechanical, photocopying, recording, or otherwise, without prior written permission from the publisher. Contact the Publisher, API Publishing Services, 200 Massachusetts Avenue, NW, Suite 1100, Washington, DC 20001.

Copyright © 2021 American Petroleum Institute

Documents
Document Sharing Hub

Full document details: API Spec 6D-2021 (2024)

Foreword

Nothing contained in any API publication is to be construed as granting any right, by implication or otherwise, for the manufacture, sale, or use of any method, apparatus, or product covered by letters patent. Neither should anything contained in the publication be construed as insuring anyone against liability for infringement of letters patent.

The verbal forms used to express the provisions in this document are as follows.

Shall: As used in a standard, “shall” denotes a minimum requirement in order to conform to the standard.

Should: As used in a standard, “should” denotes a recommendation or that which is advised but not required in order to conform to the standard.

May: As used in a standard, “may” denotes a course of action permissible within the limits of a standard.

Can: As used in a standard, “can” denotes a statement of possibility or capability.

This document was produced under API standardization procedures that ensure appropriate notification and participation in the developmental process and is designated as an API standard. Questions concerning the interpretation of the content of this publication or comments and questions concerning the procedures under which this publication was developed should be directed in writing to the Director of Standards, American Petroleum Institute, 200 Massachusetts Avenue, Suite 1100, Washington, DC 20001. Requests for permission to reproduce or translate all or any part of the material published herein should also be addressed to the director.

Generally, API standards are reviewed and revised, reaffirmed, or withdrawn at least every five years. A one-time extension of up to two years may be added to this review cycle. Status of the publication can be ascertained from the API Standards Department, telephone (202) 682-8000. A catalog of API publications and materials is published annually by API, 200 Massachusetts Avenue, Suite 1100, Washington, DC 20001.

Suggested revisions are invited and should be submitted to the Standards Department, API, 200 Massachusetts Avenue, Suite 1100, Washington, DC 20001, standards@api.org.

Documents
Document Sharing Hub

Full document details: API Spec 6D-2021 (2024)

Documents
Document Sharing Hub

Full document details: API Spec 6D-2021 (2024)

Contents

Page

1 Scope 1

2 Normative References 1

3 Terms, Definitions, Acronyms, Abbreviations, Symbols, and Units 4
3.1 Terms and Definitions 4
3.2 Acronyms and Abbreviations 10
3.3 Symbols and Units 12

4 Application, Configuration, and Performance 13
4.1 Valve Types 13
4.2 Conformance and General Performance Requirements 14
4.3 Pressure and Temperature Rating 14
4.4 Valve Bore 15
4.5 Manufacturing Processes 18

5 Design 19
5.1 General 19
5.2 Dimensions 20
5.3 Drive Train 23
5.4 Operations 24
5.5 Cavity Relief 26
5.6 Body Penetrations 27
5.7 Stem Retention 28
5.8 Antistatic 28
5.9 Lifting 28
5.10 Design Process 28

6 Materials 29
6.1 Metallic Requirements 29
6.2 Nonmetallic Requirements 29
6.3 Composition Limits 30
6.4 Tensile Test Requirements 30
6.5 Impact Test 31
6.6 Sour Service 32
6.7 Body Penetrations 32
6.8 Production Heat-treating Equipment 32

7 Welding 34
7.1 General 34
7.2 Outsourced Welding 34
7.3 Consumables 34
7.4 Qualification 34
7.5 Weld Overlay 34
7.6 Impact Testing 35
7.7 Hardness Testing 37
7.8 Visual Inspection—Welds to Pressure-containing Parts 37
7.9 Visual Inspection—Pressure-containing and Pipe Pup Welds 37
7.10 NDE of Welds Joining Pipe Pups to the Valve 37
7.11 Manufacturing Repair 38

8 Bolting 39
8.1 Pressure-boundary Bolting 39
8.2 Other Bolting 39

9 Quality Control 39
9.1 Measuring and Test Equipment Control 39
9.2 Pressure-measuring Device 40
9.3 Welding Inspectors 40

AVA Documents
Document Sharing Hub

Full document details: API Spec 6D-2021 (2024)

9.4 Visual Inspection 40
9.5 Storage for Nonmetallic Seals 41
9.6 Valve Assembly 41

10 Factory Acceptance Testing 42
10.1 Pressure Testing—General 42
10.2 Stem Backseat Test 43
10.3 Hydrostatic Shell Test 44
10.4 Hydrostatic Seat Test 45
10.5 Hydrostatic Test—Cavity Relief Valve 46

11 Coating/Painting 47

12 Marking 47
12.1 General 47
12.2 Valve Size Marking 49
12.3 Nameplate 49
12.4 Supplemental Requirements 51

13 Draining, Protection, and Preparation for Transport 51
13.1 Draining 51
13.2 Protection 51
13.3 Preparation for Transport 52

14 Documentation 52
14.1 Minimum Documentation and Retention 52
14.2 Documentation Provided with the Valve 52

Annex A (informative) Repair or Remanufacture of Valves 54

Annex B (informative) Examples of Valve Configurations 70

Annex C (normative) Valve End-to-end and Face-to-face Dimensions 87

Annex D (informative) Guidance for Travel Stops by Valve Type 111

Annex E (informative) Isolation Valve Features 112

Annex F (informative) Design Validation 115

Annex G (normative) External Coating for End Connectors 126

Annex H (normative) Heat-treat Equipment Qualification 129

Annex I (normative) Quality Specification Level (QSL) and Supplemental Testing 132

Annex J (informative) Requirements for Extended Hydrostatic Shell Test Duration and Records Retention for Valves in Jurisdictional Pipeline Systems 143

Annex K (normative) Purchaser-specified Customization—Permissible Deviations to Specified Design and Manufacturing Requirements 145

Annex L (informative) Specified Customization—Supplemental Options to Specified Design and Manufacturing Requirements 148

Annex M (informative) Valves in Hydrogen (H_2) Gas Service 160

Figures

1 Typical Flange Dimension 21

2 Bolt-hole Misalignment of Flange Across Valve 22

3 Charpy V-notch Weld Metal Specimen Location 36

4 Charpy V-notch Heat-affected Zone Specimen Location 36

5 Typical Identification Plate for a Valve with One Seat Unidirectional and One Seat Bidirectional 51

AVA Documents
Document Sharing Hub

Full document details: API Spec 6D-2021 (2024)

B.1 Axial Valve 71
B.2 Ball Valve (Floating) 72
B.3 Ball Valve (Side-entry Trunnion Mounted) 73
B.4 Ball Valve (Top-entry Trunnion Mounted) 74
B.5 Ball Valve (Welded-body Trunnion Mounted) 75
B.6 Check Valve (Axial Flow) 76
B.7 Check Valve (Full-opening Swing) 77
B.8 Check Valve (Long Pattern, Single-plate Wafer-type) 78
B.9 Check Valve (Long Pattern, Typical Dual-plate Wafer-type) 79
B.10 Check Valve (Piston) 80
B.11 Check Valve (Reduced-opening Swing) 81
B.12 Check Valve (Short Pattern, Single-plate Wafer-type) 82
B.13 Gate Valve (Expanding-gate/Rising-stem) 83
B.14 Gate Valve (Slab-gate/Through-conduit Rising-stem) 84
B.15 Plug Valve 85
B.16 Rising Stem Ball Valve 86
E.1 Block and Bleed—Type A 113
E.2 Block and Bleed—Type B 113
E.3 Double Block and Bleed—Type A 113
E.4 Double Block and Bleed—Type B 114
E.5 Double Isolation and Bleed—Type A 114
E.6 Double Isolation and Bleed—Type B 114
F.1 Test Procedure for Pressure Temperature Cycle 124
G.1 Raised Face 126
G.2 Ring Type Joint or Raised-face Ring Type Joint 127
G.3 Weld End 127
G.4 Pipe Pup Weld Ends 128
H.1 Thermocouple Locations—Rectangular Furnace (Working Zone) 129
H.2 Thermocouple Locations—Cylindrical Furnace (Working Zone) 130
L.1 Pressure Balance Hole for Ball Valve (Typical) 157
L.2 Pressure Balance Hole for Gate Valve (Typical) 157

Tables

1 Minimum Bore for Full-opening Valves 17
2 Process Control Requirements 18
3 Sizes for Drain 27
4 Minimum V-notch Impact Requirements for Material other than Duplex and Super Duplex Stainless Steel (Full-size Specimen) 31
5 Minimum V-notch Impact Requirements for Duplex and Super Duplex Stainless Steel (Full-size Specimen) 31
6 Adjustment Factors for Subsize Impact Specimens 32

AVA Documents
Document Sharing Hub

7 Heat Treatment Thermal Uniformity Survey (TUS) Requirements 33
8 Minimum Duration of Stem Backseat Tests 43
9 Minimum Duration of Hydrostatic Shell Tests 44
10 Minimum Duration of Hydrostatic Seat Tests 45
11 Valve Marking on Body 48
12 Additional Marking 49
13 Valve Marking on Nameplate 50
A.1 Initial Inspection 56
A.2 Items for Photographic Inspection 56
A.3 Disassembly of Ball Valve with Seat Leakage 58
A.4 Requirements for Evaluation of Components 60
A.5 Requirements for Replacement Parts of Non-OEM Parts 65
A.6 Nameplate Marking Requirements 68
C.1 Axial Valves—Face-to-face (A) and End-to-end (B and C) Dimensions 88
C.2 Ball Valves—Side-Entry and Top-Entry, Face-to-face (A), and End-to-end (B and C) Dimensions 91
C.3 Check Valves and Axial Check Valves (Full Opening and Reduced Types)—Face-to-face (A) and End-to-end (B and C) Dimensions 96
C.4 Check Valves (Single- and Dual-plate, Long- and Short-pattern, Wafer-type, and Double Flanged)—Face-to-face Dimensions 101
C.5 Gate Valves—Face-to-face (A) and End-to-end (B and C) Dimensions 103
C.6 Plug Valves—Face-to-face (A) and End-to-end (B and C) Dimensions 106
D.1 Valve Travel Stops 111
E.1 Isolation Valve Types 112
F.1 Design Validation for Valves 121
F.2 Minimum Percentage of Pressure During Opening Phase 122
I.1 NDE Requirements 133
I.2 Extent, Method, and Acceptance Criteria of NDE/Item Examination Code 134
I.3 Production Materials Requirements 135
I.4 Testing Sequence for Quality Specification Levels 136
I.5 Minimum Duration of Gas Shell Tests 140
I.6 Documentation Requirements for Each QSL 142
L.1 Stabilization Period Duration 154
L.2 Minimum Duration of Gas Shell Tests 155
M.1 Summary of Specification Level Requirements for Hydrogen 161
M.2 Fugitive Emission Test Acceptance Criteria—Helium Gas 170
M.3 Fugitive Emission Test Acceptance Criteria—Forming Gas 170

Documents
Document Sharing Hub

Full document details: API Spec 6D-2021 (2024)

Introduction

Changes from the 24th to the 25th Edition

This specification is the result of updating the requirements from API Specification 6D, 24th Edition, including Addendum 1 and Addendum 2. The revision of API 6D, 25th Edition, was developed based on input from the API 6D Task Group technical experts globally. The technical revisions have been made to accommodate the needs of industry and address many interpretations to move this specification to a higher level of service to the petroleum and natural gas industry. Highlights of some of the significant changes between the 24th edition and 25th edition, include:

— changing the title of the specification;

— reorganizing the specification requirements in an order more aligned with the manufacturing process;

— the addition of axial valves to the types of valves covered by this specification;

— the removal of Class 400 as a standard pressure class;

— requiring conformance to API 6DX for valves supplied with actuators;

— identifying allowable adjustments for subsize impact specimens;

— identifying minimum heat treatment requirements;

— identifying minimum bolting requirements;

— revising marking requirements;

— providing updated design validation guidance;

— addition of requirements for repair and remanufacture of valves from API 6DR in new Annex A;

— collecting all purchaser-specified requirements into annexes (Annex K and Annex L);

— combining QSL requirements from the 24th edition (Annexes I, J, and H into one annex [Annex I]);

— adding guidance through-out the document reference to API 20 series specifications and standards.

Units of Measurement

In this standard, data are expressed in both U.S. customary (USC) and metric (SI) units.

Rounding

Except as otherwise required by this specification, to determine conformance with the specified requirements, observed or calculated values are rounded to the nearest unit in the last right-hand place of figures used in expressing the limiting value, in conformance with the rounding method of ASTM E29 or ISO 80000-1, Annex B, Rule A.

Documents
Document Sharing Hub

Full document details: API Spec 6D-2021 (2024)

Specification for Valves

1 Scope

This specification defines the requirements for the design, manufacturing, materials, welding, quality control, assembly, testing, marking, documentation, and process controls of axial, ball, check, gate, and plug valves for application in the petroleum and natural gas industries, and hydrogen gas service.

This specification applies to ASME Class 150, 300, 600, 900, 1500, and 2500.

NOTE ASME Class 400 has been removed from this specification.

API 6DR for repair and remanufacture of valves has been withdrawn and has been replaced by Annex A.

Annexes A, B, D, E, F, J, L, and M are informative and contain optional requirements used in this specification.

Annexes C, G, H, I, and K are normative and are mandatory in the use of this specification.

Information marked "NOTE" are not requirements but are provided for guidance in understanding or clarifying the associated requirement.

2 Normative References

The following referenced documents are indispensable for the application of this document. For dated references, only the edition cited applies. For undated references, the latest edition of the referenced document (including any amendments) applies, except that new editions may be used on issue and shall become mandatory upon the effective date specified by the publisher or 6 months from the date of the revision (where no effective date is specified).

AMPP (formerly NACE)[1]

NACE MR0175/ISO15156 (all parts), *Petroleum and natural gas industries—Materials for use in H_2S-containing environments in oil and gas production*

API

API Standard 6ACRA, *Age-hardened Nickel-based Alloys for Oil and Gas Drilling and Production Equipment*

API Standard 6DX, *Standard for Actuators and Mounting Kits for Valves*

API Specification 6FA, *Specification for Fire Test for Valves*

API Specification 20A, *Carbon Steel, Alloy Steel, Stainless Steel, and Nickel Base Alloy Castings for Use in the Petroleum and Natural Gas Industry*, 2nd Edition

API Specification 20B, *Open Die Shaped Forgings for Use in the Petroleum and Natural Gas Industry*, 1st Edition

API Specification 20C, *Closed Die Forgings for Use in the Petroleum and Natural Gas Industry*, 3rd Edition

[1] Association for Material Protection and Performance (formerly NACE International), 1440 South Creek Drive, Houston, Texas 77084-4906, www.nace.org.

AVA Documents
Document Sharing Hub

Full document details: API Spec 6D-2021 (2024)

API Specification 20E, *Alloy and Carbon steel bolting for Use in the Petroleum and Natural Gas Industries, 2nd Edition*

API Specification 20F, *Corrosion-resistant Bolting for use in the Petroleum and Natural Gas Industries*, 2nd Edition

API Standard 607, *Fire Test for Quarter-turn Valves and Valves Equipped with Nonmetallic Seats*

API Standard 624, *Type Testing of Rising Stem Valves Equipped with Graphite Packing for Fugitive Emissions*

API Standard 641, *Type Testing of Quarter-turn Valves for Fugitive Emissions*

ASME[2]

ASME B1.1, *Unified Inch Screw Threads (UN and UNR Thread Form)*

ASME B1.20.1, *Pipe Threads, General Purpose (Inch)*

ASME B16.5, *Pipe Flanges and Flanged Fitting*: NPS 1/2 through 24

ASME B16.10, *Face-to-Face and End-to-End Dimensions of Valves*

ASME B16.25, *Buttwelding Ends*

ASME B16.34, *Valves—Flanged, Threaded, and Welding End*

ASME B16.47, *Large Diameter Steel Flanges: NPS 26 through NPS 60 Metric/Inch Standard*

ASME B18.2.2, *Nuts for General Applications: Machine Screw Nuts, Hex, Square, Hex Flange, and Coupling Nuts (Inch Series)*

ASME B31.4, *Pipeline Transportation Systems for Liquid Hydrocarbons and Other Liquids,*

ASME B31.8, *Gas Transmission and Distribution Piping Systems*

ASME Boiler and Pressure Vessel Code (BPVC), Section II: *Materials, Part D: Properties*

ASME Boiler and Pressure Vessel Code (BPVC), Section V: *Nondestructive Examination*

ASME Boiler and Pressure Vessel Code (BPVC), Section VIII: *Rules for Construction of Pressure Vessels; Division 1: Rules for Construction of Pressure Vessels*

ASME Boiler and Pressure Vessel Code (BPVC), Section VIII: *Rules for Construction of Pressure Vessels; Division 2: Alternative Rules*

ASME Boiler and Pressure Vessel Code (BPVC), Section IX: *Welding and Brazing Qualifications*

ASNT[3]

ASNT SNT-TC-1A, *Personnel Qualification and Certification in Non-Destructive Testing*

---

[2] ASME International, 2 Park Avenue, New York, New York 10016-5990, www.asme.org.
[3] American Society for Nondestructive Testing, 1711 Arlingate Lane, P.O. Box 28518, Columbus, Ohio 43228, www.asnt.org.

AVA Documents
Document Sharing Hub
Full document details: API Spec 6D-2021 (2024)

ASTM[4]

ASTM A320/A320M, *Standard Specification for Alloy-Steel and Stainless Steel Bolting Materials for Low-Temperature Service*

ASTM A370/A370M, *Standard Test Methods and Definitions for Mechanical Testing of Steel Products*

ASTM A488/A488M, *Standard Practice for Steel Castings, Welding, Qualifications of Procedures and Personnel*

ASTM A578A/A578M, *Standard Specification for Straight-Beam Ultrasonic Examination of Rolled Steel Plates for Special Applications*

ASTM A609/A609M, *Standard Practice for Castings, Carbon, Low-Alloy, and Martensitic Stainless Steel, Ultrasonic Examination Thereof*

ASTM A962/A962M, *Standard Specification for Common Requirements for Steel Fasteners or Fastener Materials, or Both, Intended for Use at Any Temperature from Cryogenic to the Creep Range*

ASTM E10, *Standard Test Method for Brinell Hardness of Metallic Materials*

ASTM E18, *Standard Test Methods for Rockwell Hardness of Metallic Materials*

ASTM E110, *Standard Test Method for Rockwell and Brinell Hardness of Metallic Materials by Portable Hardness Testers*

ISO[5]

ISO 148-1, *Metallic materials—Charpy pendulum impact test—Part 1: Test method*

ISO 228-1, *Pipe threads where pressure-tight joints are not made on the threads—Part 1: Dimensions, tolerances and designation*

ISO 3601-2, *Fluid power systems—O-rings—Part 2: Housing dimensions for general applications*

ISO 3601-3, *Fluid power systems—O-rings—Part 3: Quality acceptance criteria*

ISO 5208, *Industrial valves—Pressure testing of valves*

ISO 9606-1, *Approval testing of welders—Fusion welding—Part 1: Steels*

ISO 9712, *Non-destructive testing—Qualification and certification of personnel*

ISO 10497, *Testing of valves— Fire type-testing requirements*

ISO 14732, *Welding personnel — Qualification testing of welding operators and weld setters for mechanized and automatic welding of metallic materials*

ISO TR 15608, *Welding—Guidelines for a metallic materials grouping system*

ISO 15609 (all parts), *Specification and qualification of welding procedures for metallic materials—Welding procedure specification*

---

[4] ASTM International, 100 Barr Harbor Drive, West Conshohocken, Pennsylvania 19428, www.astm.org.
[5] International Organization for Standardization, 1, ch. de la Voie-Creuse, Case postale 56, CH-1211 Geneva 20, Switzerland, www.iso.org.

Documents
Document Sharing Hub
Full document details: API Spec 6D-2021 (2024)

ISO 15614-1, *Specification and qualification of welding procedures for metallic materials—Welding procedure test—Part 1: Arc and gas welding of steels and arc welding of nickel and nickel alloys*

ISO 15614-7, *Specification and qualification of welding procedures for metallic materials—Welding procedure test—Part 7: Overlay welding*

ISO 15848-1, *Industrial valves—Measurement, test and qualification procedures for fugitive emissions—Part 1: Classification system and qualification procedures for type testing of valves*

ISO 15848-2, *Industrial valves—Measurement, test and qualification procedures for fugitive emissions—Part 2: Production acceptance test of valves*

ISO 23936-1, *Petroleum, petrochemical and natural gas industries—Non-metallic materials in contact with media related to oil and gas production—Part 1: Thermoplastics*

ISO 23936-2, *Petroleum, petrochemical and natural gas industries—Non-metallic materials in contact with media related to oil and gas production—Part 2: Elastomers*

MSS[6]

MSS SP-25, *Standard Marking System for Valves, Fittings, Flanges, and Unions*

MSS SP-44, *Steel Pipeline Flanges*

MSS SP-55, *Quality Standard for Steel Castings for Valves, Flanges and Fittings and Other Piping Components—Visual Method for Evaluation of Surface Irregularities*

SAE[7]

SAE AMS-H-6875, *Heat Treatment of Steel Raw Materials*

SAE AMS2750, *Pyrometry*

3 Terms, Definitions, Acronyms, Abbreviations, Symbols, and Units

3.1 Terms and Definitions

For the purposes of this document, the following definitions apply.

3.1.1
assembly
An association of multiple parts/components into a finished product, including, at a minimum, installation of all pressure-containing and pressure-controlling parts.

3.1.2
bidirectional seat
A valve seat designed to seal against a pressure source in either direction.

3.1.3
bidirectional valve
A valve designed for blocking the flow from either the upstream or the downstream direction.

[6] Manufacturers Standardization Society of the Valve and Fittings Industry, Inc., 127 Park Street, NE, Vienna, Virginia 22180- 4602, www.mss-hq.com.
[7] SAE Headquarters, 400 Commonwealth Drive, Warrendale, PA 15096

Documents
Document Sharing Hub
Full document details: API Spec 6D-2021 (2024)

3.1.4
bleed (*verb*)
To drain or vent.

3.1.5
block and bleed valve
BB
A valve with at least one seating surface that, in the closed position, provides a seal against pressure from one end of the valve with the other end depressurized.

3.1.6
block valve
An axial, check, ball, gate, or plug valve that blocks flow when in the closed position.

NOTE Valves may be either single-seated or double-seated or either bidirectional or unidirectional.

3.1.7
breakaway thrust
breakaway torque
The maximum thrust or torque required to operate a valve at maximum pressure differential.

3.1.8
by agreement
A contractual requirement between the manufacturer and the purchaser needed for a given action to be completed.

3.1.9
casting (*noun*)
An object at or near finished shape obtained by solidification of a fluid substance in a mold.

NOTE Objects made by hot isostatic pressing are not castings.

3.1.10
closure member
Part of a valve, such as a ball, clapper, disc, gate, piston, or plug, positioned in the flow stream to permit or prevent flow.

NOTE Earlier editions of API 6D referred to the closure member as an “obturator.”

3.1.11
corrosion-resistant
corrosion-resistant alloy
An alloy (or material) intended to be resistant to general and localized corrosion and/or environmental cracking in environments that are corrosive to carbon and low-alloy steels

3.1.12
date of manufacture
The month and year of completion of factory acceptance testing.

3.1.13
design review and verification
The process of examining the result of design and development output to determine conformity with specified requirements.

NOTE Design verification activities can include one or more of the following (this is not an all-inclusive list):

a) confirming the accuracy of design results through the performance of alternative calculations;

Documents
Document Sharing Hub
Full document details: API Spec 6D-2021 (2024)

b) review of design output documents independent of activities of design and development;

c) comparing new designs to similar proven designs.

3.1.14
design validation
The process of proving a design by testing to demonstrate conformity of the product to design requirements.

NOTE Design validation can include one or more of the following (this is not an all-inclusive list):

a) prototype tests;

b) functional and/or operational tests of production products;

c) tests specified by industry standards and/or regulatory requirements;

d) field performance tests and reviews.

3.1.15
double block and bleed valve
DBB
A valve with two or more seating surfaces that, in the closed position, provides a seal against pressure from both ends of the valve with a means of venting/bleeding the cavity between the seating surfaces.

3.1.16
double isolation and bleed valve
DIB
A valve with two or more seating surfaces, each of which, in the closed position, provide a seal against pressure from a single source, with a means of venting/bleeding the cavity between the seating surfaces.

NOTE This feature can be provided in one direction or in both directions.

3.1.17
drive train
All parts of a valve drive from the operator to and including the closure member connection that transmit or react to loads.

3.1.18
flow coefficient
C_v
The volumetric flow rate of U.S. gallons of water per minute at a temperature of 60 °F (15.6 °C) passing through a valve and resulting in a pressure loss of 1 psi (0.0069 MPa; 0.069 bar).

3.1.19
hand-wheel
A part used to manually operate a valve requiring turning and consisting of a rim connected to a hub.

3.1.20
locking device
A part or an arrangement of parts for securing a valve in the open or closed position.

3.1.21
manufacturer
An organization, facility, or individual that satisfies the requirements of this specification.

NOTE See 4.5.1 for activities that may be outsourced.

Documents
Document Sharing Hub
Full document details: API Spec 6D-2021 (2024)

3.1.22
maximum allowable working pressure
MAWP
The maximum pressure at which the valve is designed to operate, at a corresponding temperature, as defined by ASME B16.34.

NOTE Pressure–temperature ratings are the maximum allowable working pressure for the corresponding temperature.

3.1.23
maximum allowable stem torque/thrust
MAST
The maximum torque/thrust that can be applied to the valve drive train without damage, as defined by the valve manufacturer.

3.1.24
maximum pressure differential
MPD
The maximum difference between the upstream and downstream pressure across the closure member at which the closure member may be operated.

3.1.25
nominal [diameter] size
DN
A numerical designation of size (in millimeters) that is common to components in piping systems.

3.1.26
nominal pipe size
NPS
A numerical designation of size (in inches) that is common to components in piping systems.

3.1.27
operator
An individual device or assembly for opening and closing a valve that may be controlled manually or under separate power (electric, hydraulic, or gas-driven).

NOTE 1 A manual operator can be a wrench (lever) or hand-wheel with or without a gearbox.

NOTE 2 A powered operator can include an actuator, a gearbox, and/or direct drive device.

3.1.28
outsourced
A function, activity, or process that is performed by an external supplier on behalf of the manufacturer.

3.1.29
packing gland
Components that are used to compress/retain the stem packing.

3.1.30
pipe pup
transition piece
A piece of pipe or forged material that is welded to the finished valve body.

3.1.31
position indicator
A device that shows the position of the valve closure member.

Documents
Document Sharing Hub
Full document details: API Spec 6D-2021 (2024)

3.1.32
pressure balance hole
pressure equalization hole
An opening in the closure member that provides pressure balance between the valve bore and valve cavity only when in the open position.

NOTE The hole does not provide relief of cavity overpressure in the closed position.

3.1.33
pressure-boundary bolting
A threaded fastener used to assemble pressure-containing parts.

EXAMPLE Pressure boundary bolting can include studs, nuts, bolts, and cap screws.

3.1.34
pressure class
A numerical designation as defined in ASME B16.34 that also defines the pressure and temperature rating for the end connector material of the valve.

NOTE The ASME rating class (pressure rating designation) is composed of the word "Class," followed by a dimensionless number (the designation for pressure-temperature ratings); for example: Class 150, Class 300, etc.

3.1.35
pressure-containing parts
Parts such as those identified in 5.1.2 whose failure to function as intended results in a release of contained fluid into the environment.

NOTE Pressure-containing parts do not include bolting (see Section 8).

3.1.36
pressure-controlling parts
Parts such as those identified in 5.1.3 that are intended to allow or prevent the flow of fluids.

3.1.37
purchaser
An organization, facility, or individual that buys equipment from the manufacturer.

3.1.38
remanufacturer
An organization, facility, or individual performing disassembly, reassembly, and testing of a valve with or without replacement of parts that includes machining, welding, heat-treating, and/or other manufacturing operations, but without replacement of the body, performed in conformance with this specification.

3.1.39
repairer
An organization, facility, or individual performing disassembly, reassembly, and testing of a valve with or without replacement of parts that does not include machining, welding, and heat-treating, other manufacturing operations, or replacement of bodies performed in conformance with this specification.

NOTE Repair processes can include buffing, polishing, deburring, and other minimal removal processes.

3.1.40
sealing surface
The contact surface of dynamic or static seals within the valve shell, excluding end connector sealing surfaces that mate with other equipment.

EXAMPLE Sealing surface examples include the stem, seat, cover/bonnet seals, and backseat.

Documents
Document Sharing Hub
Full document details: API Spec 6D-2021 (2024)

3.1.41
seating surfaces
Contact surfaces of the closure member and seat that affect valve sealing.

NOTE The seat may be integral to the valve body.

3.1.42
self-relieving seat
A valve seat designed to relieve pressure from the valve cavity.

NOTE Depending upon valve type, the pressure may be relieved to the pressure source or the low-pressure side.

3.1.43
shaft
A part that supports the closure member on a check valve and that may or may not pass through the pressure-boundary.

3.1.44
shell test
A test of the assembled pressure-containing parts.

3.1.45
stem
A part that, when present, drives the closure member and passes through the pressure-boundary.

3.1.46
stem extension assembly
A non-pressure-containing assembly consisting of the stem extension and the stem extension housing.

3.1.47
temperature, maximum allowable
The upper limit for a valve based on continuous operating service conditions.

NOTE 1 The maximum operating temperature may be limited by pressure.

NOTE 2 Pressure-temperature ratings are the maximum allowable working pressure for the corresponding temperature.

3.1.48
temperature, minimum allowable
The lower limit for a valve based on continuous operating service conditions.

NOTE The minimum operating temperature may be limited by pressure.

3.1.49
through-conduit valve
A valve with an unobstructed and continuous cylindrical opening.

3.1.50
unidirectional seat
A valve seat designed to seal the pressure source in one direction only.

3.1.51
unidirectional valve
A valve designed for blocking the flow in one direction only.

Documents
Document Sharing Hub
Full document details: API Spec 6D-2021 (2024)

3.1.52
unless otherwise agreed
A provision to permit modification of a requirement of this specification, only where the requirement includes this term and only when the manufacturer and purchaser are in agreement regarding the modification.

3.1.53
upstream
The side of the valve closer to the source of pressure.

NOTE Downstream is the opposite side of the seat-to-closure member.

3.1.54
visible leakage
Leakage of test fluid observed by any visual method during a pressure test.

3.2 Acronyms and Abbreviations

For the purposes of this document, the following acronyms and abbreviations apply.

ACCP	ASNT Central Certification Program
AMPP	Association for Material Protection and Performance
API	American Petroleum Institute
ASNT	American Society for Nondestructive Testing
ASME	American Society for Mechanical Engineers
ASTM	American Society for Testing and Materials
AWS	American Welding Society
BB	block and bleed
BM	base metal
BPVC	Boiler and Pressure Vessel Code
BSL	bolting specification level
BTC	break-to-close
BTO	break-to-open
CE	carbon equivalent
CRA	corrosion-resistant alloy
DBB	double block and bleed
DIB	double isolation and bleed
DN	nominal size
DPE	double piston effect

Documents
Document Sharing Hub
Full document details: API Spec 6D-2021 (2024)

ETC	end-to-close
ETO	end-to-open
FAT	factory acceptance test
HAZ	heat-affected zone
HBW	Brinell hardness, tungsten ball indenter
HRC	Rockwell C hardness
HVOF	High Velocity Oxygen Fuel
ID	inner/inside diameter
ISO	International Standards Organization
MAWP	maximum allowable working pressure
MAST	maximum allowable stem torque/thrust
MPD	maximum pressure differential
MSS	Manufacturers Standardization Society
MT	magnetic-particle testing
NDE	nondestructive examination
NACE	formerly National Association of Corrosion Engineers
NORM	naturally occurring radioactive material
NPS	nominal pipe size
NPT	national pipe taper
OD	outer/outside diameter
OEM	original equipment manufacturer
PMI	positive material identification
PQR	(weld) procedure qualification record
PT	penetrant testing
PWHT	post-weld heat treatment
QSL	quality specification level
RGD	rapid gas decompression
RT	radiographic testing
RTC	run-to-close

Documents
Document Sharing Hub
Full document details: API Spec 6D-2021 (2024)

RTO	run-to-open
SAE	Society of Automotive Engineers
SDS	safety data sheet
SLH	specification level for hydrogen
SMYS	specified minimum yield strength
SPE	single piston effect
SWL	safe working limit
TC	test coupon
TPI	threads per inch
TUS	thermal uniformity survey
UNC	Unified National Coarse
UT	ultrasonic testing
VT	visual testing
WM	weld metal
WPS	weld procedure specification

3.3 Symbols and Units

For the purposes of this document, the following symbols and units apply.

C_V	flow coefficient in USC units
K_V	flow coefficient in SI (metric) units
ppm	part per million (mass)
Sm	design stress intensity value
Sy	[specified minimum] yield strength
t	thickness
V	volts, direct current
Ω	ohms

Documents
Document Sharing Hub
Full document details: API Spec 6D-2021 (2024)

4 Application, Configuration, and Performance

4.1 Valve Types

4.1.1 General

This specification shall apply to the following:

— axial valves;

— ball valves;

— check valves;

— gate valves;

— plug valves.

NOTE The nomenclature used in this specification for typical equipment is shown in Figures B.1 thru B.15.

Valves having a preferred flow direction for operation shall be marked per Table 12.

4.1.2 Axial Valves

Axial valves shall have a closure member that moves on an axis parallel to the direction of flow.

NOTE A typical configuration for axial valves with flanged or weld ends is shown, for illustration purposes only, in Figure B.1. Other configurations for this valve type are possible.

4.1.3 Ball Valves

Ball valves shall have a solid, one-piece nominally spherical closure member that rotates on an axis perpendicular to the direction of flow.

NOTE Typical configurations for ball valves with flanged or weld ends are shown, for illustration purposes only, in Figures B.2 through B.5. Other configurations for this valve type are possible.

4.1.4 Check Valves

Check valves shall have a closure member that responds automatically to block fluid in one direction and to permit fluid flow in the opposite direction.

NOTE 1 Typical configurations for check valves are shown, for illustration purposes only, in Figures B.6 through B.12. Other configurations for this valve type are possible.

NOTE 2 Check valves may be supplied with a lock-open feature that would prevent the automatic blocking of fluid flow.

4.1.5 Gate Valves

Gate valves shall have a closure member that moves in a plane perpendicular to the direction of flow.

NOTE 1 The closure member can be constructed of one piece (slab-gate valve) or of two or more pieces (expanding-gate valve).

Gate valves shall be provided with a backseat or secondary stem sealing feature in addition to the primary stem seal.

AVA Documents
Document Sharing Hub

NOTE 2 Typical configurations for gate valves with flanged and weld ends are shown, for illustration purposes only, in Figures B.13 and Figure B.14. Other configurations for this valve type are possible.

4.1.6 Plug Valves (Lubricated and Non-lubricated)

Plug valves shall have a cylindrical or conical closure member that rotates about an axis perpendicular to the direction of flow.

NOTE A typical configuration for plug valves with flanged and weld ends is shown, for illustration purposes only, in Figure B.15. Other configurations for this valve type are possible.

4.2 Conformance and General Performance Requirements

Valves conforming to this specification shall be manufactured under the manufacturer's quality management system, which shall conform to an industry-accepted standard such as API Q1 or ISO 9001.

Designs shall conform to 5.10.

Only testing and NDE requirements identified in Section 4 through Section 14 shall apply to valves manufactured to this specification. The supplemental testing and quality specification levels of Annex I shall apply when specified by the purchaser.

NOTE 1 Annex I identifies supplemental requirements for nondestructive examination and pressure testing that may be performed on a valve when specified by the manufacturer or purchaser.

Applicable requirements as stated in Section 4 through Section 14 shall apply to valves manufactured to this specification without modification unless otherwise specified in accordance with the allowances in Annex K. The acceptable deviations as identified in Annex K shall apply when specified by the purchaser.

NOTE 2 Annex K identifies allowable modifications that may be applied to valves when specified by the purchaser. Valves manufactured with any allowed modification in accordance with Annex K conform to this specification.

The supplemental requirements in Annex L and Annex M shall apply when specified by the manufacturer and/or purchaser.

NOTE 3 Annex L and Annex M identify allowable additions or supplements to the requirements in Section 4 through Section 14 that may be applied to valves when specified by the manufacturer or purchaser. Valves manufactured with any allowed addition or supplement in accordance with Annex L and/or Annex M conform to this specification.

4.3 Pressure and Temperature Rating

4.3.1 Standard Valves—ASME Pressure Class

Standard valves covered by this specification shall be furnished in one of the following pressure classes (see 3.1.34):

— Class 150;

— Class 300;

— Class 600;

— Class 900;

— Class 1500;

— Class 2500.

Documents
Document Sharing Hub

Full document details: API Spec 6D-2021 (2024)

Pressure-temperature ratings for class-rated valves shall conform to the rating table for the applicable material group per ASME B16.34.

The pressure-temperature rating applied shall be based on the material group of the valve end connector. Where the valve ends are made from material in two different groups, the material with the lower pressure-temperature rating shall determine the rating.

NOTE Different material or material forms may be used for body and bonnet or cover parts within the same valve.

All metallic pressure-containing and pressure-controlling parts shall be designed to meet the identified valve pressure-temperature rating.

The manufacturer shall determine any limits on the maximum allowable working pressure (MAWP) and shall identify the minimum and maximum allowable temperatures resulting from the nonmetallic parts used.

4.3.2 Non-standard Valves—Pressures and Temperatures

Non-standard valves with intermediate pressure and temperature ratings shall conform to K.2.

Intermediate pressure and temperature ratings shall not be applied to valves with ASME flanged ends (see K.2).

Pressure-temperature ratings for valves made from materials not listed in ASME B16.34 shall be determined, up to the temperature limitation of the valve, using the methods defined in ASME B16.34, in accordance with 5.1, or per MSS SP-44.

4.4 Valve Bore

4.4.1 Nominal Size

Valves manufactured to this specification shall conform to either:

— nominal size as listed in Table 1; or

— size and bore determined by agreement when no size or minimum bore dimension is listed in Table 1 (see K.3.1).

NOTE Weld-end valves may require a smaller diameter at the weld end to mate with the pipe.

4.4.2 Full-opening Valves

Full-opening valves shall be unobstructed in the fully opened position and shall have an internal minimum circular opening of the closure member and seat as specified in Table 1.

When pipe is used in the construction of the valves, the pipe shall meet the tolerances of the applicable pipe specification.

Valves with a noncircular opening through the closure member shall not be identified as full opening.

4.4.3 Reduced-opening Valves with a Circular Opening

Reduced-opening valves with a circular opening through the closure member shall conform to one of the following:

a) valves NPS 4 (DN 100) to NPS 12 (DN 300): one size below nominal size of valve with bore according to Table 1;

Documents
Document Sharing Hub
Full document details: API Spec 6D-2021 (2024)

b) valves NPS 14 (DN 350) to NPS 24 (DN 600): one or two sizes below nominal size of valve with bore according to Table 1;

c) valves that do not conform to 4.4.3.a or 4.4.3.b: see K.3.2;

d) valve sizes less than NPS 4 (DN 100) or greater than NPS 24 (DN 600) conforming to L.2.

EXAMPLE An NPS 16 (DN 400) Class 1500 reduced-opening ball valve has an allowable minimum bore of 11.30 in. (287.0 mm).

Documents
Document Sharing Hub
Full document details: API Spec 6D-2021 (2024)

Table 1—Minimum Bore for Full-opening Valves

NPS	DN	Minimum [a] Bore by Class, in. (mm)[b]			
		Class 150, 300, and 600	Class 900	Class 1500	Class 2500
½	15	0.50 (12.7)	0.50 (12.7)	0.50 (12.7)	0.50 (12.7)
¾	20	0.75 (19.0)	0.75 (19.0)	0.75 (19.0)	0.75 (19.0)
1	25	0.98 (25.0)	0.98 (25.0)	0.98 (25.0)	0.98 (25.0)
1¼	32	1.25 (31.8)	1.25 (31.8)	1.25 (31.8)	1.25 (31.8)
1½	40	1.50 (38.0)	1.50 (38.0)	1.50 (38.0)	1.50 (38.0)
2	50	1.93 (49.0)	1.93 (49.0)	1.93 (49.0)	1.65 (42.0)
2½	65	2.44 (62.0)	2.44 (62.0)	2.44 (62.0)	2.05 (52.0)
3	80	2.91 (74.0)	2.91 (74.0)	2.91 (74.0)	2.44 (62.0)
4	100	3.94 (100.0)	3.94 (100.0)	3.94 (100.0)	3.42 (87.0)
6	150	5.91 (150.0)	5.91 (150.0)	5.67 (144.0)	5.16 (131.0)
8	200	7.91 (201.0)	7.91 (201.0)	7.55 (192.0)	7.04 (179.0)
10	250	9.92 (252.0)	9.92 (252.0)	9.41 (239.0)	8.78 (223.0)
12	300	11.93 (303.0)	11.93 (303.0)	11.30 (287.0)	10.43 (265.0)
14	350	13.15 (334.0)	12.67 (322.0)	12.40 (315.0)	11.50 (292.0)
16	400	15.16 (385.0)	14.69 (373.0)	14.17 (360.0)	13.11 (333.0)
18	450	17.16 (436.0)	16.65 (423.0)	15.98 (406.0)	14.72 (374.0)
20	500	19.17 (487.0)	18.54 (471.0)	17.87 (454.0)	16.50 (419.0)
22	550	21.18 (538.0)	20.55 (522.0)	19.69 (500.0)	—
24	600	23.19 (589.0)	22.44 (570.0)	21.50 (546.0)	—
26	650	24.92 (633.0)	24.29 (617.0)	23.38 (594.0)	—
28	700	26.93 (684.0)	26.18 (665.0)	25.23 (641.0)	—
30	750	28.94 (735.0)	28.03 (712.0)	27.00 (686.0)	—
32	800	30.66 (779.0)	29.92 (760.0)	28.74 (730.0)	—
34	850	32.68 (830.0)	31.81 (808.0)	30.50 (775.0)	—
36	900	34.41 (874.0)	33.66 (855.0)	32.24 (819.0)	—
38	950	36.42 (925.0)	35.59 (904.0)	—	—
40	1000	38.43 (976.0)	37.63 (955.8)	—	—
42	1050	40.16 (1020.0)	39.61 (1006.0)	—	—
48	1200	45.90 (1166.0)	45.24 (1149.0)	—	—
54	1350	51.65 (1312.0)	—	—	—
56	1400	53.54 (1360.0)	—	—	—
60	1500	57.40 (1458.0)	—	—	—

[a] There is no upper size limit for a valve bore.

[b] The millimeter dimension is the inch dimension multiplied by 25.4 and rounded to one decimal place.

— = no identified minimum bore

4.4.4 Reduced-opening Valves with Noncircular Opening

A reduced-opening valve with a noncircular opening that does not conform to 4.4.2 or 4.4.3 shall still satisfy all applicable requirements of this specification. These valves shall include but not be limited to the following:

— axial valves (see Figure B.1);

— check valve axial flow (see Figure B.6);

— check valve, long pattern, typical dual-plate wafer-type (see Figure B.9);

Documents
Document Sharing Hub

— check valve, piston (see Figure B.10);

— swing check valve, reduced opening (see Figure B.11);

— check valve, short pattern, single-plate wafer-type (see Figure B.12);

— plug valve (see Figure B.15).

NOTE Other valve configurations may apply.

4.5 Manufacturing Processes

4.5.1 Process Control

The process control activities associated with the manufacturing of a valve identified in Table 2 shall be performed by the manufacturer or outsourced as identified. The manufacturer shall maintain equipment and personnel to achieve conformance to the requirements listed in Table 2 for all activities performed by the manufacturer.

Table 2—Process Control Requirements

Item No.	Process Control Activity	Performed by:	
		Manufacturer[1]	Outsourced[2]
1	Product design and validation	X	X
2	Material procurement	X	X
3	Verification of externally provided products or activities	X	Not permitted
4	Machining	X	X
5	In-process inspection	X	X
6	Welding	X	X
7	Assembly	X	Not permitted
8	Factory acceptance testing (Section 10)	X	Not permitted
9	Additional specified requirements per Annexes I, J, K, or L[3]	X	X[3]
10	Marking/tagging/nameplate	X	Not permitted
11	Coating/painting[4]	X	X
12	Corrosion protection and preparation for transport	X	X
13	Final inspection	X	Not permitted

FOOTNOTES
[1] See 3.1.21.
[2] See 3.1.28.
[3] Requirements of L.9, L.10, L.11, and L.12 shall be performed by the manufacturer and shall not be outsourced.
[4] See Annex G.
X = when performed

When any process is outsourced in conformance with this specification (see Table 2), the manufacturer shall retain responsibility for all applicable elements of its quality management system and for product conformance to specified requirements.

NOTE For use of outsourced machining services, see API 20M for guidance.

4.5.2 Processes Requiring Validation

The manufacturer shall validate the following processes where the resulting output cannot be verified by subsequent monitoring or measurement:

— heat treating (see 6.8 and Annex H);

AVA Documents
Document Sharing Hub
Full document details: API Spec 6D-2021 (2024)

— welding (see Section 7);

— nondestructive examination, including visual examination (see 7.5.3.2, 7.8, 7.9, 7.10, and Annex I).

5 Design

5.1 General

5.1.1 Design Standards and Calculations

Design and calculations for pressure-containing parts and pressure-boundary bolting shall conform to an industry-accepted design code or standard such as ASME BPVC, Section VIII, Division 1 or Division 2; ASME B16.34; EN 12516-1; or EN 12516-2; and EN 13445-3.

Allowable stress values used for acceptance shall not exceed those specified by the selected design code or standard.

If the selected design code or standard specifies a test pressure less than 1.5 times the MAWP, the MAWP for the body calculation shall be increased such that the hydrostatic test pressure in 10.3 and I.5 can be applied.

5.1.2 Pressure-containing Parts

Pressure-containing parts shall include bodies, external trunnions, end connectors, bonnets/covers, pipe and flanges used on vent or drain systems, and stems/external shaft.

5.1.3 Pressure-controlling Parts

Pressure-controlling parts shall include the closure member and seat.

The manufacturer shall document engineering practices and acceptance criteria on which the design is based.

The design of the pressure balance hole, when equipped, shall have a ratio between the length of the hole and the hole diameter of less than 10 (L/D < 10) up to a maximum hole diameter of 0.5 in. (13 mm).

5.1.4 Bolted Joint Design

Bolting preload torques shall be calculated using an industry-accepted standard, such as API 6A, ASME PCC-1, or EN 1591, with a coefficient of friction on the threads and nut face, based on bolting material, bolting coating, and the type of lubricant applied.

To address variability in bolt stress by torquing, the theoretical bolt stress due to preload shall not exceed 70 % of yield at the allowable temperature.

Where more than one seal of different diameters are used to form the pressure-containing joint, the following requirements apply:

— The gasket or seal diameter used in the bolting calculation and closure flange stress verification shall be the outer seal diameter of the largest seal, or in the case of spiral wound gaskets, the median diameter shall be used.

— Required sealing stress shall be confirmed for all seals and gaskets.

— When verifying the bolt stress at the outer seal diameter of the largest seal, the bolting stress shall not exceed 0.83 of SMYS at test condition (see 10.3).

AVA Documents
Document Sharing Hub

NOTE A fire-safe seal may be the largest diameter.

5.2 Dimensions

5.2.1 Standard Face-to-face and End-to-end Dimensions

Standard face-to-face (A) and end-to-end (B and C) dimensions of valves shall conform to the applicable tables in Annex C.

NOTE See Figure B.1 to Figure B.16 for reference to dimension A, dimension B, and dimension C where shown.

Weld end-to-end (B) dimensions of valves shall conform to the applicable tables in Annex C.

Standard face-to-face and end-to-end dimensions for valve sizes not specified in Annex C shall conform to ASME B16.10.

5.2.2 Non-standard Face-to-face and End-to-end Dimensions

Non-standard face-to-face and end-to-end dimensions shall conform to K.4.

Non-standard dimensions shall include face-to-face and end-to-end dimensions not shown or not conforming to the values in tables in Annex C or ASME B16.10.

If the non-standard end-to-end dimension includes pipe pups/transition pieces, those pieces shall conform to all requirements for the body.

The length of valves having one weld end and one flanged end shall be determined by adding half the length of a flanged-end valve to half the length of a weld-end valve.

Tolerances on non-standard face-to-face and end-to-end dimensions shall be ±0.06 in. (±1.5 mm) for valve sizes smaller than NPS 12 (DN 300), and ±0.12 in. (±3.0 mm) for valve sizes NPS 12 (DN 300) and larger.

NOTE Support legs on some valve designs may extend beyond the end-to-end dimensions to assure that the valve can be safely supported.

5.2.3 End Connectors

5.2.3.1 Flanged Connectors

5.2.3.1.1 General

Flanges shall be furnished with a raised face or ring joint face (raised face or full face). Specified dimensions, tolerances, and finishes, including drilling templates, flange facing, nut-bearing surfaces (i.e. spot facing and back facing), outside diameters, and thickness (see Figure 1) shall conform to:

— ASME B16.5 for sizes up to and including NPS 24 (DN 600), except NPS 22 (DN 550); or

— MSS SP-44 for NPS 22 (DN 550); or

— ASME B16.47, Series A for NPS 26 (DN 650) and larger sizes; or

— MSS SP-44 for sizes NPS 12 (DN 300) to NPS 60 (DN 1500).

NOTE 1 See K.5 for optional requirements for end connectors.

Documents
Document Sharing Hub
Full document details: API Spec 6D-2021 (2024)

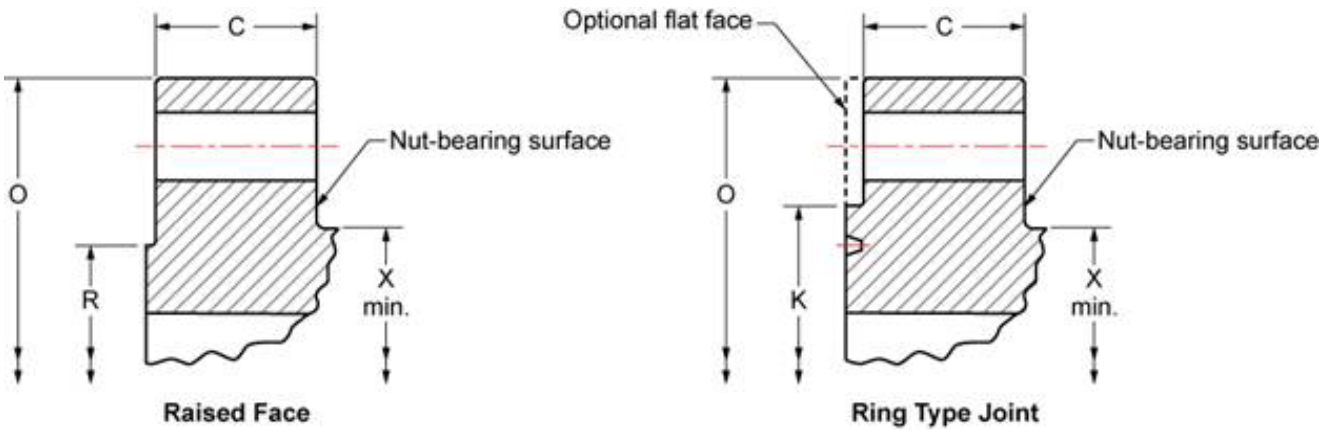

Key

C	flange thickness
O	outside diameter of flange
R	raised-face diameter
K	minimum diameter of raised portion of ring type joint flange
X min.	hub diameter

Figure 1—Typical Flange Dimensions

Valves with through-bolted flanged end connectors shall be designed to accommodate heavy hex series nuts having dimensions as specified in ASME B18.2.2.

NOTE 2 For valves with heavy wall sections, flanges with nut stops in accordance with Mandatory Appendix 2 of ASME BPVC, Section VIII, Division 1 may apply.

5.2.3.1.2 Lateral Alignment of Flanges

Lateral misalignment (offset) from one flange to the opposite flange shall apply to centerlines of the bores, ring grooves, and bolt circles.

For valves NPS 4 (DN 100) and smaller, lateral misalignment shall not exceed 0.079 in. (2 mm).

For valves larger than NPS 4 (DN 100), lateral flange misalignment shall not exceed 0.118 in. (3 mm).

5.2.3.1.3 Parallelism of Flanges

Valves shall be designed to have a maximum parallelism misalignment as follows:

— For valves up to NPS 24 (DN 600) 0.03 in./ft (2.5 mm/m).

— For valves larger than NPS 24 (DN 600) 0.02 in./ft (1.75 mm/m).

5.2.3.1.4 Misalignment of Bolt Holes

For valve end connectors, bolt-hole misalignment of the flange from one end of the valve to the other (see Figure 2) shall conform to the following:

— For valves NPS 4 (DN 100) and smaller, the misalignment shall not exceed 0.08 in. (2 mm) at the bolt holes.

AVA Documents
Document Sharing Hub

— For valves larger than NPS 4 (DN 100), the misalignment shall not exceed 0.12 in. (3.0 mm) at the bolt holes.

Bolt holes shall be equally positioned on both sides of a reference vertical centerline.

NOTE This reference vertical centerline may not exist in an axial valve.

The nut bearing areas on the flange back face shall be parallel to the flange front face within 1°.

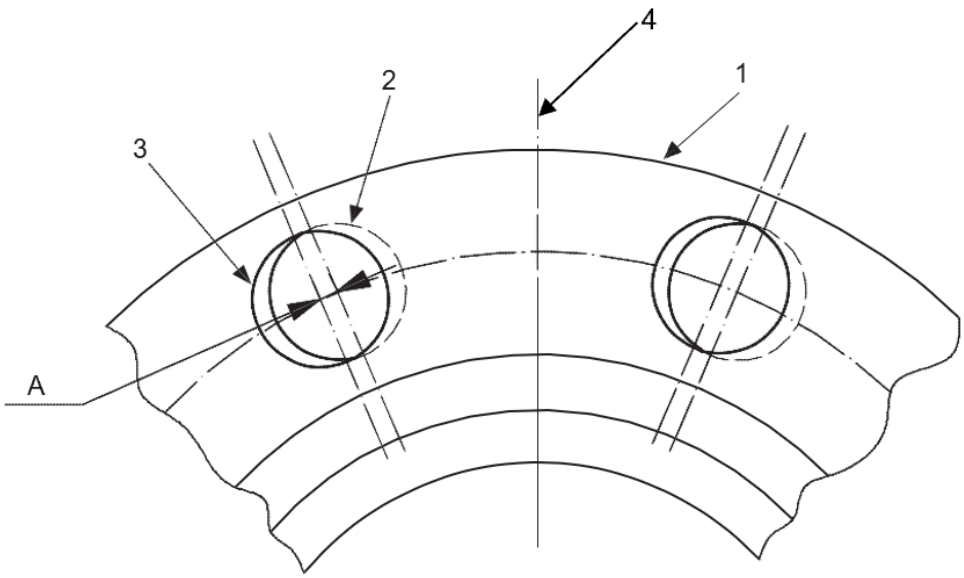

Key
1 flange
2 hole in first flange
3 hole in opposite flange for alignment
4 valve operator axis (see 5.2.3.1.2)
A bolt-hole misalignment (see 5.2.3.1.4)

Figure 2—Bolt-hole Misalignment of Flange Across Valve

5.2.3.1.5 Studded-end Valve End Connectors

The manufacturer shall notify the purchaser when studded-end connectors are provided on one or more bolt holes. Studded-end connectors shall be provided with threaded holes (studded outlet) for engaging flange bolting.

Threaded-body flange holes for bolts 1 in. or less in diameter shall be threaded in accordance with ASME B1.1, UNC, Class 2B. For bolts $1^1/_8$ in. or larger in diameter, holes shall be threaded in accordance with ASME B1.1, 8-TPI, Class 2B.

NOTE See K.6 for optional requirements for studded-end valve end connectors.

Thread engagement in a flange with threaded holes shall provide full effective thread engagement, not including the chamfered thread, for a length at least equal to the nominal diameter of the bolt thread.

5.2.3.2 Weld end Connectors

Weld-end dimensions shall conform to ASME B31.4, ASME B31.8, or ASME B16.25.

Documents
Document Sharing Hub
Full document details: API Spec 6D-2021 (2024)

NOTE 1 When the valve body is thicker than the mating pipe, the outside profile may be tapered at 30° and then to 45°, as illustrated in ASME B16.25.

The following details shall be specified for the mating pipe:

— outside diameter;

— length of pup piece;

— wall thickness;

— material grade;

— specified minimum yield strength (SMYS);

— any special chemistry of the mating pipe; and

— if weld overlay has been applied.

NOTE 2 See K.5 for optional requirements for weld-end requirements.

NOTE 3 The pipe pup may be welded and post-weld heat treatment performed, if applicable, prior to valve assembly.

5.3 Drive Train

5.3.1 General

The drive train, including the stem, shall be designed such that failure of a part due to an operating condition that exceeds the valve MAST will occur at a point outside the pressure boundary.

The valve design shall prevent the misalignment of the valve stem.

NOTE 1 The weight of the operator and associated drive train components may adversely affect the alignment and deflection of the valve stem.

NOTE 2 Drive train bolting includes bolting used to mount an actuator.

5.3.2 Torque/Thrust

For axial, floating ball, trunnion ball, gate, and plug valves, the design thrust or torque for all drive train calculations shall be at least 2 times the breakaway thrust or torque as defined by 3.1.7.

For swing check valves with extended shafts used for lock open operation, the design torque for all drive train calculations shall be at least 2 times the torque to open the closure member.

For rising stem ball valves, the design thrust or torque for all drive train calculations shall be:

— at least 1.5 times the breakaway thrust or torque associated with the non-preferred sealing side; and

— at least 2 times the breakaway thrust or torque in the preferred sealing side.

NOTE Torque or thrust may be determined by calculation or by measurement.

Documents
Document Sharing Hub

Full document details: API Spec 6D-2021 (2024)

5.3.3 Allowable Stress

Design stresses for tensile stress and shear stress (including torsional shear stress) shall conform to ASME BPVC, Section VIII, except that the design stress intensity value, S_m, shall be limited to 67 % of yield strength S_y for the design conditions.

The average primary shear stress across a section loaded at design conditions in pure shear (e.g., keys, shear rings, screw threads, etc.) shall be limited to 0.6 S_m.

The maximum primary shear at design conditions, exclusive of stress concentration at the periphery of a solid circular section in torsion, shall be limited to 0.8 S_m.

Unless otherwise agreed, the design stress intensity limits shall not apply to the components of rolling-element or other proprietary bearings or high-bearing-strength-capable materials that are included in the drive train where manufacturer's recommendations or limits derived from tests and service experience apply. Data and analysis that were the basis for the manufacturer's rating shall be documented.

The average bearing stress shall be limited to the yield strength, S_y, at design conditions.

NOTE The possibility of a shear failure may exist when bearing loads are applied on parts having free edges, such as at a protruding edge or a keyway.

When mechanical properties at maximum allowable temperature are not available, a yield test shall be performed at maximum allowable temperature, or higher, to document the yield strength at maximum allowable temperature. To establish pressure-temperature ratings, the allowable stress shall be based on the yield strength at ambient temperature and the elevated test temperature.

A joint efficiency factor (strength of weld divided by strength of base material) of 0.75 shall be used for fillet welds.

5.3.4 Allowable Deflections

Deflections of the drive train, including extensions when provided, shall not prevent the closure member from reaching the fully closed or fully open position.

NOTE Adherence to the allowable stress limits of design codes alone may not result in a functionally acceptable design.

The manufacturer shall demonstrate, by analysis or test, that under loads resulting from MAWP and any defined pipe or external loads, distortion of the closure member or seat does not impair functionality or sealing.

5.3.5 Drive Train Bolting for Quarter-turn Valves

Drive train bolting for quarter-turn valves shall not be subjected to design loads that put the bolt in shear.

5.4 Operations

5.4.1 Method of Operation

Except for bare stem valves, the method of operation shall be specified.

When a manual gearbox is provided, the output torque/thrust rating shall be at least 1.5 times the maximum required operating torque/thrust of the valve at minimum and maximum allowable temperatures.

NOTE 1 See K.15 for operating temperatures other than the minimum allowable temperature.

Documents
Document Sharing Hub
Full document details: API Spec 6D-2021 (2024)

The hand-wheel rotary motion of a manual gearbox or wrench (lever) to close a valve shall be clockwise. Rotary motion of anything other than a manual gearbox or wrench (lever) to close a valve shall be per manufacturer specification.

NOTE 2 Valve operational data may be supplied to the purchaser.

NOTE 3 See L.3 for options related to valve operational data.

5.4.2 Wrenches (Levers) and Hand-wheels

5.4.2.1 Torque or Thrust

For axial, ball, gate, and plug valves, the maximum force required at the perimeter of the hand-wheel or wrench (lever) to stroke the valve at the breakaway torque or thrust shall not exceed 80 lbf (360 N) when applied against MAWP.

For check valves, the maximum force required at the perimeter of the hand-wheel or wrench (lever) to stroke the valve at zero differential pressure shall not exceed 80 lbf (360 N).

5.4.2.2 Size

Wrenches (levers) for valves shall either be of an integral design or consist of a head that fits on the stem and is designed to take an extended handle.

Wrenches (levers) that are of an integral design (not loose) shall not be longer than twice the face-to-face or end-to-end dimension of the valve.

Wrenches (levers) longer than 24 in. (600 mm) shall be capable of being removed.

Hand-wheel diameter(s) shall not exceed 40 in. (1 m). Spokes shall not extend beyond the perimeter of the hand-wheel.

5.4.3 Position Indicators

5.4.3.1 General

Unless otherwise specified, valves fitted with an operator shall be furnished with a visible indicator to show the open and the closed position of the closure member.

Position indicators are not required on valves for buried/underground service unless specified by the purchaser.

For plug and ball valves, the wrench and/or the position indicator shall be in line with the pipe when the valve is open and transverse when the valve is closed. The design shall be such that the component(s) of the indicator and/or wrench cannot be assembled to falsely indicate the valve position.

Valves without position stops shall have provision for the verification of open and closed alignment with the operator/actuator removed.

5.4.3.2 Position of Closure Member

Except for check valves, the position of the closure member shall not be altered by dynamic forces of the passing flow, or, in the case of screw-operated gate valves, by forces generated from internal pressure.

Documents
Document Sharing Hub

Full document details: API Spec 6D-2021 (2024)

5.4.4 Travel Stops

Valves that do not require mechanical force to affect a seal shall be provided with travel stops on the valve and/or operator, and they shall stop the closure member in the open and closed position. The travel stops shall not affect the sealing capability of the valve.

NOTE See Annex D for guidance on travel stops by valve type.

5.4.5 Operators

5.4.5.1 General

Actuators and mounting kits shall conform to API 6DX.

5.4.5.2 Sealing

The interfaces between the operator or enclosed stem extension (when provided) and the valve shall be sealed to prevent the ingress of external contaminants and moisture.

5.4.5.3 Overpressure Protection

Operators and enclosed stem extension assemblies shall be provided with a means of preventing pressure buildup in the mechanism resulting from stem or bonnet seal leakage.

5.4.5.4 Extended Stem and Shaft Assemblies

Extended stem and shaft assembly service shall conform to 5.3.

Extended stems and shaft assemblies shall be protected by an extension casing (housing).

NOTE See L.4 for guidance.

5.5 Cavity Relief

The manufacturer shall determine if the valve design could result in liquid being trapped in the body cavity in the open- and/or closed-valve position.

If liquid trapping is possible, the valve shall be provided with automatic cavity relief.

For valves in gas or multiphase fluid service at temperatures above 250 °F (121 °C), the manufacturer shall determine the need for cavity relief.

For temperatures up to 250 °F (121 °C), the valve cavity relief pressure shall not exceed 33 % differential pressure above the valve pressure rating.

For temperatures above 250 °F (121 °C), the valve cavity relief pressure and higher shell design pressure shall be specified by the manufacturer and the hydrostatic shell test shall conform to 10.3.2 or 10.3.3.

For valves NPS 4 (DN 100) and smaller (based on the closure member), external cavity relief valves and the relief valve port shall be NPS 1/4 (DN 8) or larger.

For valves larger than NPS 4 (DN 100) (based on the closure member), external cavity relief valves and the relief valve port shall be NPS ½ (DN 15) or larger.

NOTE 1 If a relief valve fitted to the cavity is required, the purchaser may specify provisions to facilitate in-service testing.

NOTE 2 Cavity relief testing and functionality may be demonstrated by tests in I.7.

AVA Documents
Document Sharing Hub

Full document details: API Spec 6D-2021 (2024)

5.6 Body Penetrations

5.6.1 Vents and Drains

All double-seated valves that provide a seal against the pressure source with the upstream seat shall be equipped with a drain or vent connector except when specified in conformance with M.3.2.

Vent and drain connectors shall be threaded, welded, studded outlet, or flanged.

If threaded, tapered threads shall be capable of providing a seal and shall conform to ASME B1.20.1.

If parallel threads are used, the connector shall have a head section for trapping and retaining a sealing member suitable for the specified valve service. Parallel threads shall conform to ASME B1.20.1 or ISO 228-1.

The drain size shall conform to Table 3.

Table 3—Sizes for Drain

Valve Size		Minimum Pipe Size[1]
NPS	DN	
<2	<50	¼
2 to 8	50 to 200	½
>8	>200	1

[1] The purchaser may specify other sizes and connector types in conformance with K.7.

5.6.2 Injection Points

When provided:

— Seat injection points shall have two non-return valves where one of the non-return valves shall be secured in the valve independent of the outer injection fitting.

— Injection fittings shall incorporate a button head connector that is protected by a pressure-containing protective cap/plug. This requirement shall not apply to lubricated plug valves.

— Stem/shaft injection points shall be located above the primary sealing barrier and shall include a fitting inclusive of a non-return valve and a pressure-containing cap/plug.

— Injector fittings of injectable packing points shall include a non-return valve and plunger.

— Injection fittings shall have a MAWP not less than the greater of the MAWP of the valve or the injection pressure.

— Tapered threads shall conform to ASME B1.20.1.

— Parallel threads shall conform to ASME B1.20.1 or ISO 228-1.

— Injection points shall incorporate a non-return valve and a secondary means of isolation for each injection point.

— Protective caps shall:

  — seal off the button head connector by plugging the injection port;

Documents
Document Sharing Hub

— allow any entrapped pressure to be released by the provision of a vent hole.

5.7 Stem Retention

Valves shall be designed such that the stem is retained by pressure-containing parts and the stem does not eject from internal pressure, under any operating condition or if the packing gland components or valve operator mounting components are removed.

5.8 Antistatic

Ball, check, gate, and plug valves shall have electric resistance between the closure member and the valve body and between the stem/shaft and the valve body not exceeding 10Ω when measured using a direct current power source not to exceed 12V.

NOTE See L.5 for information on optional testing of electrical resistance.

5.9 Lifting

The manufacturer shall determine the need for and verify suitability of lifting points of the valve.

The manufacturer shall develop lifting sketches and handling instructions (see 14.2.1) for safe lifting operations for valves weighing more than 55 lbs (25 kg). The safe working limit (SWL) of each lifting point and the center of gravity of the valve shall be specified in the lifting sketches and handling instructions.

NOTE 1 Regulatory requirements may specify special design, manufacturing, and certification for lifting points.

NOTE 2 For design guidance on lifting lugs, see ASME BTH-1 (service class 0) or API 17D.

NOTE 3 See K.8 for additional information on lifting points.

5.10 Design Process

5.10.1 General

Designs shall conform to the manufacturer’s documented procedures and applicable quality management system requirements.

Design requirements shall include but not be limited to those criteria for size, test and operating pressures, material, environmental, and other pertinent requirements on which the design is based.

5.10.2 Design Documentation

Documentation of designs shall include methods, assumptions, calculations, and analysis.

Design documentation media shall be clear, legible, reproducible, and retrievable. Design documentation shall be retained for 10 years after the last unit of that model, size, and rated working pressure is manufactured.

5.10.3 Design Review and Verification

The design shall be reviewed and verified by any qualified individual other than the individual who created the original design.

5.10.4 Design Validation

Design validation shall be performed in conformance with the manufacturer's validation procedure and the results of design validation shall be documented.

AVA Documents
Document Sharing Hub

Full document details: API Spec 6D-2021 (2024)

NOTE Annex F provides one method of design validation criteria that may be used for valves provided in the as-shipped condition.

6 Materials

6.1 Metallic Requirements

6.1.1 General

Metallic pressure-containing and pressure-controlling materials in contact with process fluids shall have documented material specifications that shall define the following:

— material grade;

— chemical analysis;

— heat treatment;

— mechanical properties from tensile test,

— carbon equivalent (CE) under the conditions as specified in 6.3;

— Charpy impacts under the conditions as specified in 6.5,

— hardness under the conditions as specified in 6.6; and

— certification to report all items listed in 6.1.

Metallic pressure-containing parts shall be made of materials consistent with the pressure-temperature rating as determined in conformance with 4.3.

NOTE 1 See API 20A, API 20B, and API 20C for guidance on qualification and production for casting and forging material manufacturers. The use of materials that conform to API 20A, API 20B, and API 20C does not require that the materials be supplied from a facility that has been licensed to API 20A, API 20B, or API 20C.

NOTE 2 See API 20J for guidance on the use of outsourced distributors of metallic material.

6.1.2 Cast Parts

All cast material shall be manufactured using an industry-accepted process.

6.1.3 Forged Parts

All forged material shall be formed using a hot-working practice and heat treatment that produces a wrought (no cast dendritic elements) structure throughout the material.

All forged pressure-containing material shall have a minimum forging reduction ratio of 3:1. The forging ratio shall be included as part of the material certifications.

NOTE See API 20B or API 20C for guidance.

6.2 Nonmetallic Requirements

Nonmetallic seals in contact with process fluids shall have documented material specifications that shall define the following:

Documents
Document Sharing Hub

Full document details: API Spec 6D-2021 (2024)

— generic base polymer, when used (see ASTM D1418);

NOTE 1 Reference to a generic base polymer does not apply to graphite material.

— generic thermoplastic, when used (see ASTM D4000);

— physical property requirements;

— storage requirements.

NOTE 2 For guidance on qualification of polymeric seal manufacturers, see API 20L.

Elastomeric materials for valves in gas service at pressures of Class 600 and above shall be resistant to rapid gas decompression (RGD).

NOTE 3 See L.6 for additional requirements for seals qualification testing.

The manufacturer's documented requirements for nonmetallic seals shall include the following minimum provisions:

— batch number/traceability;

— cure/mold date;

— shelf-life expiration date.

6.3 Composition Limits

The chemical composition of carbon steel pressure-containing and pressure-controlling parts shall conform to the applicable material standard.

The chemical composition of carbon steel weld ends shall meet the following requirements:

— The carbon content shall not exceed 0.23 % by mass.

— The sulfur content shall not exceed 0.020 % by mass.

— The phosphorus content shall not exceed 0.025 % by mass.

— The carbon equivalent (CE) shall not exceed 0.43 %.

The CE shall be calculated in conformance with Equation (1):

$$CE = C\ \% + Mn/6\ \% + (Cr\ \% + Mo\ \% + V\ \%)/5 + (Ni\ \% + Cu\ \%)/15 \quad (1)$$

The chemical composition of other carbon steel parts shall conform to the applicable material standard.

The carbon content of austenitic stainless-steel welding ends shall not exceed 0.03 % by mass, except for stabilized material, in which case a carbon content of up to 0.08 % by mass is permissible.

NOTE See K.9 for permissible use of other chemical compositions when specified by the purchaser.

6.4 Tensile Test Requirements

Tensile test specimens shall be removed from a test coupon (TC) after the final heat-treatment cycle performed to achieve required mechanical properties.

Documents
Document Sharing Hub
Full document details: API Spec 6D-2021 (2024)

Pressure-containing and pressure-controlling parts shall have a minimum of one tensile test performed at room temperature in accordance with ASTM A370, ASTM E8, or ISO 6892-1. For metallic materials, the tensile strength, yield strength, and elongation shall be determined.

If the results of the tensile testing do not satisfy the applicable requirements, two additional tests removed from the same TC with no additional heat treatment shall be allowed to qualify the material. The results of both additional tensile tests shall satisfy the applicable requirements.

6.5 Impact Test

Carbon, alloy, and stainless steel (except austenitic grades) pressure-containing parts in valves with a specified valve minimum operating temperature below –20 °F (–29 °C) shall be impact-tested. The test method shall be the V-notch technique and shall conform to ASTM A370 or ISO 148-1.

When using ISO 148-1, a striker with a radius of 8 mm shall be used.

NOTE 1 Design standards or local requirements may require impact testing for valves with minimum operating temperatures higher than –20 °F (–29 °C).

A minimum of one impact test, comprised of a set of three specimens, shall be performed on a representative test bar of each heat of the material in the final heat-treated condition.

Test specimens shall be cut from a separate or attached block taken from the same heat, reduced by forging where applicable, and heat-treated to the same heat treatment, including stress relieving, as the product materials.

NOTE 2 It is not necessary to retest pressure-containing parts stress relieved at or below the previous stress relieving temperature, or 50 °F (28 °C) below the tempering temperature of the original material.

The impact test shall be performed at or below the lowest temperature as defined in the applicable material specifications or the valve minimum operating temperature, whichever is lowest.

Impact test results for bolting material shall meet the requirements of the applicable material specification.

Impact test results for full-size specimens shall meet the requirements of Table 4 or Table 5.

Test specimen orientation shall conform to the applicable material specification. If the material specification does not define test specimen orientation, either transverse or longitudinal direction shall be acceptable.

Table 4—Minimum V-notch Impact Requirements for Material other than Duplex and Super Duplex Stainless Steel (Full-size Specimen)

Specified Minimum Tensile Strength		Average of Three Specimens		Minimum of Single Specimen	
KSI	MPa	Ft-lbs.	Joules	Ft-lbs.	Joules
≤85	≤586	15	20	12	16
>85 to 100	>586 to 689	20	27	16	21
>100	>689	25	34	19	26

Table 5—Minimum V-notch Impact Requirements for Duplex and Super Duplex Stainless Steel (Full-size Specimen)

Minimum Test Temperature		Average of Three Specimens		Minimum of Single Specimen	
°F	°C	Ft-lbs.	Joules	Ft-lbs.	Joules
–50	–46	33	45	26	35

AVA Documents
Document Sharing Hub
Full document details: API Spec 6D-2021 (2024)

If an impact test fails, a retest of three additional specimens removed from the same TC, with no additional heat treatment, may be made, each of which shall exhibit an impact value equal to or exceeding the required average value.

If subsize specimens are used, the Charpy V-notch impact requirements shall be equal to that of the 10 mm x 10 mm specimens multiplied by the adjustment factor listed in Table 6 at the full-size specimen test temperatures.

Table 6—Adjustment Factors for Subsize Impact Specimens

Specimen (Dimension)	Adjustment Factor
10 mm x10 mm (full size)	1 (none)
10 mm x 7.5 mm	0.833
10 mm x 6.7 mm	0.780
10 mm x 5.0 mm	0.667
10 mm x 3.3 mm	0.440
10 mm x 2.5 mm	0.333

6.6 Sour Service

Metallic materials for use in sour service shall conform to NACE MR0175/ISO 15156 (parts 1, 2, and 3).

NOTE For guidance on the use of NACE MR0175/ISO 15156 (parts 1, 2, and 3) for bolting, see L.7.

6.7 Body Penetrations

Materials for drain, vent, injection components, or other parts shall be compatible with the valve body material or made from a corrosion-resistant material.

6.8 Production Heat-treating Equipment

6.8.1 General

Heat-treating using batch or continuous type furnaces for pressure-containing parts, pressure-controlling parts, and TCs shall be performed with equipment that is used to process production parts meeting the requirements of this specification. These requirements shall not apply to surface coatings or localized PWHT.

6.8.2 Furnace Requirements

6.8.2.1 General

The heat-treatment supplier shall define the temperature range for each operation.

Automatic controlling and recording instruments shall be used.

Thermocouples shall be placed in the furnace working zone(s) and protected from furnace atmospheres by means of suitable protective devices.

6.8.2.2 Instrument Accuracy

The controlling and recording instruments used for the heat-treatment processes shall be accurate to ± 1 % of their full-scale range.

Documents
Document Sharing Hub
Full document details: API Spec 6D-2021 (2024)

Table 7—Heat Treatment Thermal Uniformity Survey (TUS) Requirements

Heat Treatment Type	Furnace Classes				
	Class 1 TUS Tolerance ±5°F (±3°C)	**Class 2 TUS Tolerance** ±10°F (±6°C)	**Class 3 TUS Tolerance** ±15°F (±8°C)	**Class 4 TUS Tolerance** ±20°F (±10°C)	**Class 5 TUS Tolerance** ±25°F (±14°C)
Normalizing	X	X	X	X	X
Annealing	X	X	X	X	X
Solution annealing	X	X	X	X	X
Austenitizing	X	X	X	X	X
Tempering	X	X	X	—	—
Precipitation hardening	X	X	X	—	—
Aging	X	X	X	—	—
Stress relieving	X	X	X	—	—
NOTE The symbol "—" is used to show actions that are not applicable.					

6.8.2.3 Instrument Calibration

Temperature-controlling and recording instruments shall be calibrated at least once every three months.

6.8.2.4 Batch-type Furnaces

Heat treatment of production parts shall be performed with heat-treating equipment that satisfies one of the following:

— calibrated in accordance with 6.8.2.2 and 6.8.2.3 and heat-treat batch-type furnaces that have been surveyed in accordance with Annex H; or

— calibrated and surveyed in accordance with SAE AMS2750 and Table 7.

The temperatures within each batch-type furnace shall be surveyed within one year prior to use of the furnace for heat treatment.

6.8.2.5 Continuous-type Furnaces

Heat treatment of production parts shall be performed with continuous-type furnaces that satisfy the following:

— operated, maintained, modified, and repaired in conformance with SAE AMS2750 or SAE AMS-H-6875;

— surveyed in conformance with Annex H.

6.8.3 Furnace Repairs

When a furnace is repaired or rebuilt, a new temperature survey shall be carried out before the furnace is used for heat treatment, unless the following conditions apply:

— Repairs return the furnace to the condition it was in at the time of the previous furnace survey and calibration; or

— Repairs do not affect the temperature tolerance of the furnace.

Documents
Document Sharing Hub
Full document details: API Spec 6D-2021 (2024)

The SAE AMS2750 sections on furnace modifications and furnace repairs shall be used to determine whether a new furnace survey is required. All furnace repairs and modifications shall be documented, and the responsible Quality Assurance organization shall determine whether an additional furnace survey and calibration is required based on the repairs or modifications in conformance with SAE AMS2750 or SAE AMS-H-6875.

6.8.4 Furnace Calibration and Survey Records

Records of furnace calibration and surveys shall be maintained for a period not less than five years. The minimum records of furnace calibration/survey shall be a certificate of conformance in accordance with Annex H.

7 Welding

7.1 General

HVOF is not a welding process and shall not be required to meet the requirements of Section 7.

7.2 Outsourced Welding

NOTE See API 20G for guidance on the use of outsourced welding services.

7.3 Consumables

The manufacturer shall have a documented procedure for storage and control of welding consumables. Materials of low-hydrogen type (including electrodes, wires, and fluxes) shall be stored and used as recommended by the manufacturer of the welding consumable to retain their original low-hydrogen properties.

7.4 Qualification

Welding, including repair welding, of pressure-containing and pressure-controlling parts shall be performed in accordance with procedures conforming to the requirements of 7.4, 7.5, and 7.6, and qualified to:

— ASME BPVC, Section IX; or

— ISO 15609 (procedures), applicable parts of ISO 15614 (qualification testing).

Welders and welding operators shall be qualified in conformance with ASME BPVC, Section IX, or ISO 9606-1, or ISO 14732.

NOTE The purchaser, pipeline design standards, material specifications, and/or local requirements may specify additional requirements.

The results of all qualification tests shall be documented in a PQR and retained in conformance to the requirements of 14.1.

PWHT shall conform to the material or welding specification or design code.

7.5 Weld Overlay

7.5.1 General

Qualification of all weld overlay shall conform to ASME BPVC, Section IX or to ISO 15614-7.

Documents
Document Sharing Hub

Full document details: API Spec 6D-2021 (2024)

Hardness survey requirements shall be applied in conformance with the requirements of NACE MR-0175/ ISO 15156 when the valves are specified for use in sour service.

7.5.2 Hard-facing Weld Overlays

Weld overlays for hard-facing shall be applied to thickness and other limitations as detailed in the qualified welding procedure (WPS and PQR).

7.5.3 Corrosion-resistant Alloy (CRA) Weld Overlays

7.5.3.1 General

For any CRA weld overlay with nickel-based alloy UNS N06625, the weld metal chemical analysis at the final qualified minimum cladding thickness identified on the procedure qualification shall be iron dilution class Fe 10: iron mass fraction 10.0 % maximum, unless the purchaser specifies otherwise (see K.10).

The iron dilution achieved at the finished minimum qualified thickness shall be identified on the weld procedure qualification records.

For all other compositions of weld overlay, the chemical analysis of the weld metal shall conform to the manufacturer's documented specification at the minimum qualified thickness.

7.5.3.2 NDE in the Final Supplied Condition

CRA weld overlays in the final supplied condition shall be visually inspected in conformance with ASME BPVC, Section V, Article 9. The following acceptance criteria shall apply:

— The undercut shall not reduce the thickness in the area (considering both sides) to below the minimum thickness.

— Surface porosity and exposed slag shall not be permitted on or within 1.77 in. (45 mm) of sealing surfaces.

Surface NDE shall be performed on the weld overlay in the final supplied condition using penetrant testing in conformance with ASME BPVC, Section V, Article 6. Acceptance shall conform to ASME BPVC, Section VIII, Division 1, Appendix 8.

7.6 Impact Testing

Qualifications of procedures for welding of pressure-containing parts and for repair welding shall conform to 7.4.

Impact testing shall be performed on carbon, alloy, and stainless steel (except austenitic grades) for the qualification of procedures for welding on valves with an allowable temperature below –20 °F (–29 °C).

NOTE Design standards and/or local requirements may require impact testing at minimum allowable temperatures above - 20 °F (-29 °C).

Impact test results for full-size specimens shall meet the requirements of Table 4 or Table 5. When subsized specimens are used, the Charpy V-notch impact requirements shall be equal to that of the 10 mm x 10 mm specimens multiplied by the adjustment factor listed in Table 6 at the full-size specimen test temperatures.

At a minimum, one set of three weld metal (WM) impact specimens shall be taken from the WM at the location shown in Figure 3. The specimens shall be oriented with the notch perpendicular to the surface of the material.

Documents
Document Sharing Hub
Full document details: API Spec 6D-2021 (2024)

Multiple sets of weld metal impact specimens shall be required when more than one welding process is used. Weld metal impact testing shall be performed to represent each welding process being qualified.

A set of three impact specimens shall be taken from the heat-affected zone (HAZ) at the location shown in Figure 4. The notch shall be placed perpendicular to the material surface at a location resulting in a maximum amount of HAZ material located in the resulting fracture.

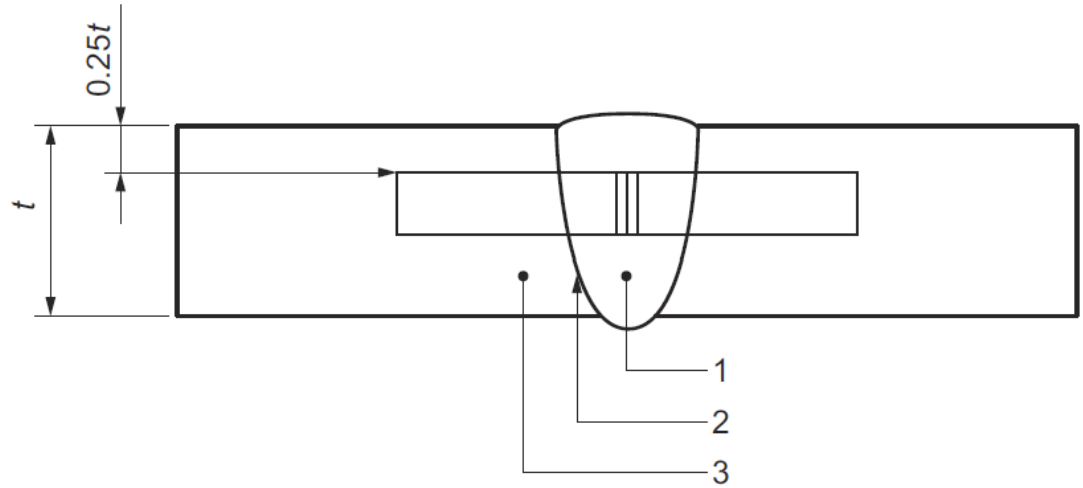

Key

1 weld metal (WM)
2 heat-affected zone (HAZ)
3 base metal (BM)

Figure 3—Charpy V-notch Weld Metal Specimen Location

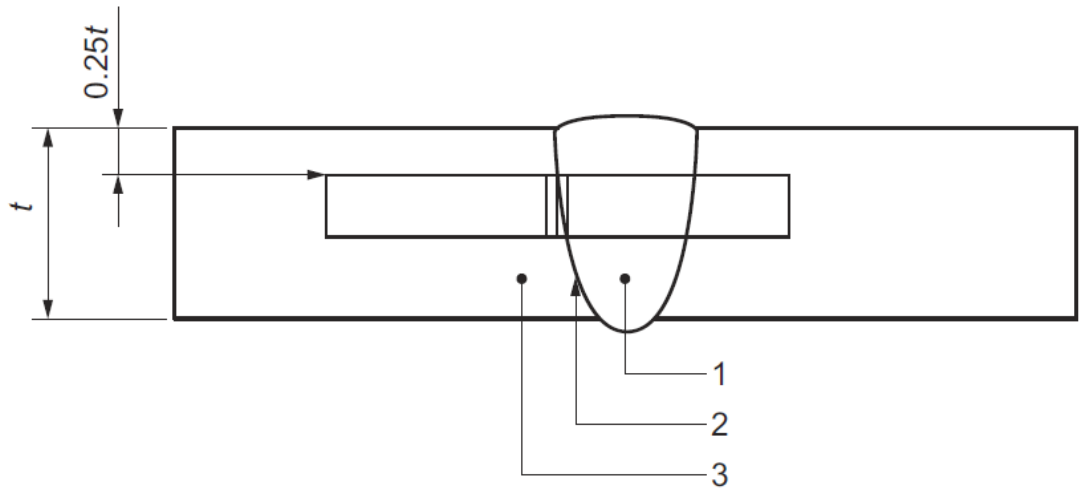

Key

1 weld metal (WM)
2 heat-affected zone (HAZ)
3 base metal (BM)

Figure 4—Charpy V-notch Heat-affected Zone Specimen Location

Documents
Document Sharing Hub
Full document details: API Spec 6D-2021 (2024)

The HAZ tests shall be conducted for each of the materials being joined when the base materials being joined are of a different P-number and/or group number that conforms to ASME BPVC, Section IX or ISO/TR 15608 when one or both of the base materials being joined are not listed in the P-number and/or group number.

Impact testing shall conform to ASTM A370 or ISO 148-1 using the Charpy V-notch technique. Impact specimens shall be etched to determine the location of the weld and HAZ.

When using ISO 148-1, a striker with a radius of 8 mm shall be used.

The impact test temperature for welds and HAZs shall be at or below the minimum allowable temperature specified for the valve. Impact test results for full-size specimens shall meet the requirements of 6.5. If the material specification requires higher impact values than those shown in 6.5, the higher values shall apply.

7.7 Hardness Testing

Hardness testing shall be carried out as part of the welding procedure qualification on pressure-containing and pressure-controlling parts in valves required to meet NACE MR0175 or ISO 15156 (all parts).

Hardness surveys shall be performed on base metal (BM), weld metal (WM), and heat-affected zone (HAZ) in conformance with the requirements of NACE MR0175 or ISO 15156 (all parts).

7.8 Visual Inspection—Welds to Pressure-containing Parts

Welds to pressure-containing parts shall be visually inspected in conformance with ASME BPVC, Section V, Article 9. The following acceptance criteria shall apply:

— The undercut shall not reduce the thickness in the area (considering both sides) to below the minimum thickness.

— Surface porosity and exposed slag shall not be permitted on or within 1.77 in. (45 mm) of sealing surfaces.

7.9 Visual Inspection—Pressure-containing and Pipe Pup Welds

Pressure-containing welds and pipe pup-to-valve welds shall be visually inspected in conformance with ASME BPVC, Section V, Article 9. The following acceptance criteria shall apply:

— The undercut shall not reduce the thickness in the area (considering both sides) to below the minimum thickness.

— Surface porosity and exposed slag shall not be permitted on or within 1.77 in. (45 mm) of sealing surfaces.

7.10 NDE of Welds Joining Pipe Pups to the Valve

For all pressure-containing pipe pup-to-valve welds, surface NDE shall be performed using at least one of the following methods:

— Magnetic particle testing on weld bevels of weld ends after machining, prior to welding, and of the final weldment shall conform to ASME BPVC, Section V, Article 7, and acceptance shall conform to ASME BPVC, Section VIII, Division 1, Appendix 6.

— Penetrant testing on weld bevels of weld ends after machining, prior to welding, and of the final weldment shall conform to ASME BPVC, Section V, Article 6, and acceptance shall conform to ASME BPVC, Section VIII, Division 1, Appendix 8.

AVA Documents
Document Sharing Hub

Full document details: API Spec 6D-2021 (2024)

For all pressure-containing pipe pup-to-valve welds, volumetric NDE examination shall be performed using at least one of the following methods:

— Radiographic testing on 100 % of the welds in accordance with ASME BPVC, Section V, Article 2, and acceptance shall conform to ASME BPVC, Section VIII, Division 1, UW-51 for linear indications and ASME BPVC, Section VIII, Division 1, Appendix 4, for rounded indications.

— Ultrasonic testing on 100 % of the welds in accordance with ASME BPVC, Section V, Article 4, and acceptance shall conform to ASME BPVC, Section VIII, Division 1, Appendix 12.

NOTE See L.8 for additional requirements for NDE for weld end connectors.

7.11 Manufacturing Repair

7.11.1 Casting Repair at the Material Supplier

The manufacturer's documented material specification for castings shall specify the limitations for welding repair at the casting material supplier as follows:

— Requirements for qualified weld procedures and qualified welders in conformance with ASTM A488/A488M, ASME BPVC Section IX or ISO 15607, ISO 15609, ISO 15614-1 and ISO 15614-7, or equivalent.

— Requirement to perform new mechanical testing in conformance with the original material specification, in case the PWHT temperature is less than 50 °F (28°C) below the final tempering temperature of the original material.

— Requirement to perform new mechanical testing in conformance with the original material specification if the PWHT is a solution anneal.

NOTE Per API 20A, repair welding is defect removal resulting in a wall thickness below an acceptable value as specified in purchasing documents.

7.11.2 Casting Repair at the Manufacturer

Repair of defects shall be performed in conformance with a documented procedure specifying requirements for defect removal, welding, heat treatment, nondestructive examination (NDE), and reporting.

Removal of surface defects shall not compromise the minimum wall thickness and shall provide a smooth transition between the ground area and the original contour. After surface defect removal, the excavated area shall be examined by either:

— magnetic-particle (MT) inspection in accordance with ASME BPVC, Section V, Article 7, and acceptance criteria shall conform to ASME BPVC, Section VIII, Division 1, Appendix 7; or

— liquid-penetrant (PT) examination in accordance with ASME BPVC, Section V, Article 6, and acceptance criteria shall conform to ASME BPVC, Section VIII, Division 1, Appendix 7.

After completion, repair welds on pressure-containing parts shall be examined using MT or PT, as well as the same NDE method that was used to identify the defect when another method was used. If visual inspection was used to identify a defect, inspection by MT or PT alone shall be acceptable. Method and acceptance criteria shall be as specified in 7.11.2. The final NDE activities shall be conducted after any required post-weld heat treatment.

Repair weld of castings shall be performed in conformance with the applicable material standard, including any PWHT when required.

Documents
Document Sharing Hub

Full document details: API Spec 6D-2021 (2024)

When the PWHT temperature is less than 50 °F (28 °C) below the final tempering temperature of the original material, new mechanical testing shall be performed in conformance with the original material specification.

When the PWHT is a solution anneal, new mechanical testing shall be performed in conformance with the original material specification.

7.11.3 Forgings and Plate

Weld repair on forgings and plates shall be limited to being performed to only correct machining errors.

Unless otherwise agreed, weld repair of forgings and plates shall not be performed to correct material defects (see K.11).

7.11.4 Repair of Welds

Repair of welds shall be performed in accordance with the applicable design code or standard listed in 5.1, including any PWHT where applicable.

8 Bolting

8.1 Pressure-boundary Bolting

Pressure boundary bolting shall conform to:

— API 20E, BSL-1 for alloy and carbon steel bolting or API 20F, BSL-2 for corrosion-resistant bolting if the specified bolting materials are listed in API 20E or API 20F; or

— the manufacturer's documented material specification and design code listed in 5.1 if the specified bolting materials are not listed in API 20E or API 20F.

NOTE 1 Use of bolting that conforms to API 20E and API 20F does not require that the bolting be supplied from a facility that has been licensed to API 20E or API 20F.

NOTE 2 Use of bolting that conforms to API 20E and API 20F includes identification of the bolts in accordance with the specified marking requirements.

NOTE 3 See API 21TR1 for guidance on the selection of bolting materials.

Low-temperature carbon and alloy steel bolting shall conform to ASTM A320/A320M for the specific grade of material.

8.2 Other Bolting

All bolting that does not satisfy the requirements of 8.1 shall conform to accepted industry specifications or the manufacturer's documented material specification.

9 Quality Control

9.1 Measuring and Test Equipment Control

9.1.1 Control

Equipment used to inspect, test, or examine valves or valve parts shall be identified, controlled, calibrated, and adjusted at specified intervals in accordance with documented manufacturer instructions, and consistent with nationally or industry-accepted standards specified by the manufacturer, to maintain the accuracy required by this specification.

AVA Documents
Document Sharing Hub

9.2 Pressure-measuring Device

9.2.1 Type and Accuracy

A test pressure-measuring device (analog or electronic) shall be accurate to at least ±2.0 % of full scale. If an analog pressure gauge is used in lieu of a pressure transducer, it shall be selected such that the test pressure is indicated within 20 % and 80 % of the full-scale value.

The requirement of 9.2 shall not apply to a pressure-recording device unless the device is used for both measurement and recording.

9.2.2 Calibration Procedure

A pressure-measuring device shall be calibrated with a master pressure-measuring device or deadweight tester to at least three points, which shall be equidistant across the full scale of the device. The full scale end points (zero and 100 %) are not required calibration points; however, if included in the calibration, the scale end points shall be in addition to the required points used for calibration.

9.2.3 Calibration Intervals

Calibration intervals shall be established by the manufacturer for calibrations based on repeatability and degree of usage.

The initial interval between calibrations shall be a maximum of 90 days until recorded calibration history can be established by the manufacturer. Increases to the interval between calibrations shall be limited to 90-day increments, with a maximum calibration interval between calibrations to not exceed 1 year.

Calibration intervals shall be adjusted based on review of the recorded calibration history, and determination of interval adjustments shall be defined in the manufacturer's documented procedure.

The calibration interval shall start on the date of first use, not to exceed three months from the date of calibration. The date of first use shall be recorded. If the calibration interval is not started within three months of the date of calibration, the equipment shall be identified as out of calibration.

9.3 Welding Inspectors

Personnel performing visual inspections of welding operations and completed welds shall be qualified and recorded in conformance with the manufacturer's documented procedures.

9.4 Visual Inspection

9.4.1 Visual Examination Personnel

Personnel performing visual inspection for acceptance shall pass an annual vision examination in conformance with the manufacturer's documented procedures that satisfy the requirements of ASNT SNT-TC-1A or ISO 9712.

9.4.2 Visual Inspection of Castings

At a minimum, visual inspection of all pressure-containing and pressure-controlling steel castings shall conform to MSS SP-55. The following acceptance criteria shall apply:

— Type I: none acceptable;

— Type II to XII: Category A and B only.

Documents
Document Sharing Hub

Full document details: API Spec 6D-2021 (2024)

For cast materials not covered by MSS SP-55, visual inspection and acceptance criteria shall conform to the manufacturer's documented procedures.

9.4.3 Visual Inspection of Forgings

At a minimum, visual inspection of all pressure-containing and pressure-controlling steel forgings shall conform to ASME BPVC Section VIII, Division 1, UF-45, and UF-46. Acceptance criteria shall be that no visible defects, including seams, laps, and folds, shall be accepted.

9.4.4 Visual Inspection of Finished Machined Parts

In addition to the requirements of 9.4.2 and 9.4.3, the machined areas of pressure-containing and pressure-controlling castings and forgings shall be visually inspected in conformance with the manufacturer's requirements.

For seals, gaskets, seat springs, and parts with plating, the parts shall be visually inspected in conformance with the applicable industry material specification.

9.5 Storage for Nonmetallic Seals

The manufacturer's written requirements for nonmetallic seals that are not assembled into equipment shall include the following information at a minimum:

— age control;

— indoor storage;

— maximum temperature not to exceed 120 °F (49 °C);

— protected from direct natural light;

— stored unstressed (see NOTE below);

— stored away from contact with liquids;

— protected from ozone and radiographic damage.

Packaging and storage of elastomeric seals shall not impose tensile or compressive stresses sufficient to cause permanent deformation or other damage.

NOTE Recommendations are typically available from seal manufacturers. Where applicable, for a given seal design, rings of large inside diameter and relatively small cross-section may be formed into three equal superimposed loops to avoid creasing or twisting, but it is not possible to achieve this condition by forming just two loops.

9.6 Valve Assembly

Valves shall be assembled per documented procedures developed by the manufacturer. The procedure shall include bolt tightening requirements for pressure-boundary bolting.

Interfaces between pressure-controlling parts shall be assembled free of any sealant, except where the sealant is the primary means of sealing.

When lubricant is used for the assembly of pressure-controlling parts, the lubricant shall not exceed the viscosity range of SAE 10W motor oil or equivalent.

NOTE 1 Other parts, such as threads, bearings, sliding parts, etc., may be lubricated for assembly using an appropriate oil or grease.

AVA Documents
Document Sharing Hub