AS 1110.1:2015
ISO 4014:2011

AS 1110.1:2015

Australian STANDARD

ISO metric hexagon bolts and screws—Product grades A and B

Part 1: Bolts

STANDARDS Australia

Documents
Document Sharing Hub

Full document details: AS 1110.1-2015

This Australian Standard® was prepared by Committee ME-029, Fasteners. It was approved on behalf of the Council of Standards Australia on 24 July 2015.
This Standard was published on 26 August 2015.

The following are represented on Committee ME-029:

- Association of Accredited Certification Bodies
- Association of Wall and Ceiling Industries of Australia and New Zealand
- Australasian Corrosion Association
- Australian Chamber of Commerce and Industry
- Australian Engineered Fasteners and Anchors Council
- Australian Industry Group
- Australian Steel Institute
- Australian Technical Infrastructure Committee
- Austroads
- Bureau of Steel Manufacturers of Australia
- CSIRO
- Employers and Manufacturers Association
- Galvanizers Association of Australia
- Materials Australia
- National Association of Steel-Framed Housing
- National Association of Testing Authorities Australia
- New Zealand Heavy Engineering Research Association
- Society of Automotive Engineers—Australasia
- Steel Construction New Zealand
- Swinburne University of Technology

This Standard was issued in draft form for comment as DR AS 1110.1:2015.

Standards Australia wishes to acknowledge the participation of the expert individuals that contributed to the development of this Standard through their representation on the Committee and through the public comment period.

Keeping Standards up-to-date

Australian Standards® are living documents that reflect progress in science, technology and systems. To maintain their currency, all Standards are periodically reviewed, and new editions are published. Between editions, amendments may be issued.

Standards may also be withdrawn. It is important that readers assure themselves they are using a current Standard, which should include any amendments that may have been published since the Standard was published.

Detailed information about Australian Standards, drafts, amendments and new projects can be found by visiting www.standards.org.au

Standards Australia welcomes suggestions for improvements, and encourages readers to notify us immediately of any apparent inaccuracies or ambiguities. Contact us via email at mail@standards.org.au, or write to Standards Australia, GPO Box 476, Sydney, NSW 2001.

Documents
Document Sharing Hub

Full document details: AS 1110.1-2015

Australian Standard®

ISO metric hexagon bolts and screws—Product grades A and B

Part 1: Bolts

Originated as AS 1110—1972.
Revised and redesignated (in part) as AS 1110.1—2000.
Second edition AS 1110.1:2015.

COPYRIGHT

© Standards Australia Limited

All rights are reserved. No part of this work may be reproduced or copied in any form or by any means, electronic or mechanical, including photocopying, without the written permission of the publisher, unless otherwise permitted under the Copyright Act 1968.

Published by SAI Global Limited under licence from Standards Australia Limited, GPO Box 476, Sydney, NSW 2001, Australia

ISBN 978 1 76035 198 4

Documents
Document Sharing Hub

Full document details: AS 1110.1-2015

PREFACE

This Standard was prepared by the Standards Australia Committee ME-029, Fasteners, to supersede AS 1110.1—2000, *ISO metric hexagon bolts and screws—Product grades A and B*, Part 1: *Bolts*.

The objective of this Standard is to provide manufacturers, suppliers and users with the dimensions, tolerances and material requirements for hexagon head bolts of ISO product grades A and B with ISO metric coarse threads.

This Standard is Part 1 of a two-part series on ISO metric hexagon bolts and screws. Part 2 gives the dimensions for screws.

This Standard is identical with, and has been reproduced from, ISO 4014:2011, *Hexagon head bolts—Product grades A and B.*

As this Standard is reproduced from an International Standard, the following applies:

(a) In the source text 'this International Standard' should read 'this Australian Standard'.

(b) A full point substitutes for a comma when referring to a decimal marker.

References to International Standards should be replaced by references to Australian Standards, as follows:

Reference to International Standard		*Australian Standard*	
ISO		AS	
898	Mechanical properties of fasteners made of carbon steel and alloy steel	4291	Mechanical properties of fasteners made of carbon steel and alloy steel
898-1	Part 1: Bolts, screws and studs with specified property classes—Coarse thread and fine pitch thread	4291.1	Part 1: Bolts, screws and studs
965	ISO general purpose metric screw threads—Tolerances	1721	General purpose metric screw threads
965-1	Part 1: Principles and basic data		
4017	Hexagon head screws—Product grades A and B	1110	ISO metric hexagon bolts and screws—Product grades A and B
		1110.2	Part 2: Screws
4759	Tolerances for fasteners		
4759-1	Part 1: Bolts, screws, studs and nuts—Product grades A, B and C	5066	Tolerances for ISO metric bolts, screws, studs and nuts—Product grades A, B and C

Only normative references that have been adopted as Australian or Australian/New Zealand Standards have been listed.

Documents
Document Sharing Hub

Full document details: AS 1110.1-2015

INTRODUCTION

This International Standard belongs to a complete group of product standards developed by ISO on external hexagon drive fasteners. It comprises the following:

a) hexagon head bolts (ISO 4014, ISO 4015, ISO 4016 and ISO 8765);

b) hexagon head screws (ISO 4017, ISO 4018 and ISO 8676);

c) hexagon nuts (ISO 4032, ISO 4033, ISO 4034, ISO 4035, ISO 4036, ISO 7040, ISO 7041, ISO 7042, ISO 7719, ISO 7720, ISO 8673, ISO 8674, ISO 8675, ISO 10511, ISO 10512 and ISO 10513);

d) hexagon bolts with flange (ISO 4162, ISO 15071 and ISO 15072);

e) hexagon nuts with flange (ISO 4161, ISO 7043, ISO 7044, ISO 10663, ISO 12125, ISO 12126 and ISO 21670).

Documents
Document Sharing Hub

Full document details: AS 1110.1-2015

NOTES

Documents
Document Sharing Hub

Full document details: AS 1110.1-2015

AUSTRALIAN STANDARD

ISO metric hexagon bolts and screws—Product grades A and B

Part 1:
Bolts

1 Scope

This International Standard specifies the characteristics of hexagon head bolts with threads from M1,6 up to and including M64, of product grade A for threads M1,6 to M24 and nominal lengths up to and including 10*d* or 150 mm, whichever is the shorter, and product grade B for threads over M24 or nominal lengths over 10*d* or 150 mm, whichever is the shorter.

If, in special cases, specifications other than those listed in this International Standard are required, they can be selected from existing International Standards, for example ISO 724, ISO 888, ISO 898-1, ISO 965-1, ISO 3506-1, ISO 4753 and ISO 4759-1.

2 Normative references

The following referenced documents are indispensable for the application of this document. For dated references, only the edition cited applies. For undated references, the latest edition of the referenced document (including any amendments) applies.

ISO 225, *Fasteners — Bolts, screws, studs and nuts — Symbols and descriptions of dimensions*

ISO 724, *ISO general-purpose metric screw threads — Basic dimensions*

ISO 898-1, *Mechanical properties of fasteners made of carbon steel and alloy steel — Part 1: Bolts, screws and studs with specified property classes — Coarse thread and fine pitch thread*

ISO 965-1, *ISO general-purpose metric screw threads — Tolerances — Part 1: Principles and basic data*

ISO 3269, *Fasteners — Acceptance inspection*

ISO 3506-1, *Mechanical properties of corrosion-resistant stainless steel fasteners — Part 1: Bolts, screws and studs*

ISO 4017, *Hexagon head screws — Product grades A and B*

ISO 4042, *Fasteners — Electroplated coatings*

ISO 4753, *Fasteners — Ends of parts with external ISO metric thread*

ISO 4759-1, *Tolerances for fasteners — Part 1: Bolts, screws, studs and nuts — Product grades A, B and C*

ISO 6157-1, *Fasteners — Surface discontinuities — Part 1: Bolts, screws and studs for general requirements*

ISO 8839, *Mechanical properties of fasteners — Bolts, screws, studs and nuts made of non-ferrous metals*

ISO 8992, *Fasteners — General requirements for bolts, screws, studs and nuts*

ISO 10683, *Fasteners — Non-electrolytically applied zinc flake coatings*

Documents
Document Sharing Hub

© Standards Australia

Full document details: AS 1110.1-2015

3 Dimensions

See Figure 1 and Tables 1 and 2.

Symbols and descriptions of dimensions are specified in ISO 225.

Dimensions in millimetres

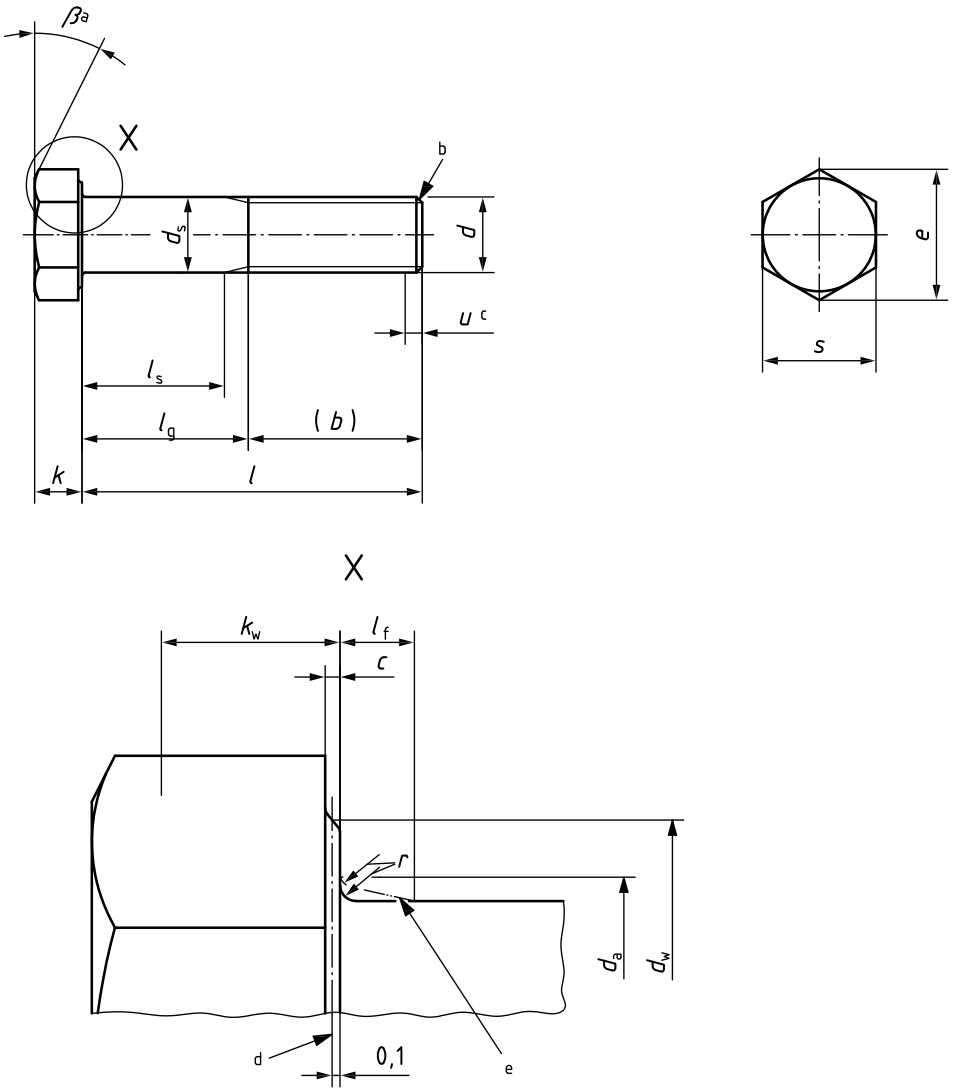

a $\beta = 15°$ to 30°.

b Point shall be chamfered or for threads ⩽ M4 may be as-rolled (sheared end) in accordance with ISO 4753.

c Incomplete thread $u \leqslant 2P$.

d Reference datum for d_w.

e Maximum underhead fillet.

Figure 1

© Standards Australia

Documents
Document Sharing Hub

Full document details: AS 1110.1-2015