AS 11801.1:2019
(Incorporating Amendment No. 1)

Australian STANDARD®

STANDARDS Australia

Information technology — Generic cabling for customer premises

Part 1: General requirements (ISO/IEC 11801-1:2017, MOD)

Documents
Document Sharing Hub

Full document details: AS 11801.1-2019 (2022)

AS 11801.1:2019

This Australian Standard™ was prepared by CT-001, Communications Cabling. It was approved on behalf of the Council of Standards Australia on 4 April 2019.

This Standard was published on 24 May 2019.

The following are represented on Committee CT-001:

Australian Chamber of Commerce and Industry
Australian Council of Trade Unions
Australian Digital and Telecommunications Industry Association
Australian Industry Group
Australian Information Industry Association
BICSI South Pacific (Australia)
Energy Networks Australia
Engineers Australia
KNX National Group
National Electrical and Communications Association
Telstra Corporation

Additional Interests

VTI Services

This Standard was issued in draft form for comment as DR AS/NZS 11801.1:2018.

Keeping Standards up-to-date

Ensure you have the latest versions of our publications and keep up-to-date about Amendments, Rulings, Withdrawals, and new projects by visiting:
www.standards.org.au

ISBN 978 1 76072 466 5

Documents
Document Sharing Hub

Full document details: AS 11801.1-2019 (2022)

Information technology — Generic cabling for customer premises

Part 1: General requirements (ISO/IEC 11801-1:2017, MOD)

Originated as AS 3080—1992.
Revised and redesignated as AS/NZS 3080:1996.
Previous edition 2013.
Revised and redesignated as AS 11801.1:2019.
Reissued incorporating Amendment No 1 (December 2022).

COPYRIGHT

© ISO/IEC 2022 — All rights reserved
© Standards Australia Limited 2022

All rights are reserved. No part of this work may be reproduced or copied in any form or by any means, electronic or mechanical, including photocopying, without the written permission of the publisher, unless otherwise permitted under the Copyright Act 1968 (Cth).

Documents
Document Sharing Hub

Full document details: AS 11801.1-2019 (2022)

Preface

This Standard was prepared by the Joint Standards Australia/Standards New Zealand Committee CT-001, Communications Cabling, to supersede as follows:

A1 AS 11801.1, in conjunction with AS 11801.2, supersedes AS/NZS 3080:2013, *Information technology—Generic cabling for customer premises (ISO/IEC 11801:2011, MOD)*

AS 11801.1, in conjunction with AS 11801.3, supersedes AS/NZS ISO/IEC 24702:2007, *Telecommunications installations — Generic cabling — Industrial premises*

AS 11801.1, in conjunction with AS 11801.4, supersedes AS/NZS ISO/IEC 15018:2005, *Information technology—Generic cabling for homes*

AS 11801.1, in conjunction with AS 11801.5, supersedes AS/NZ ISO/IEC 24764:2012, *Generic cabling systems for data centres* A1

A1 *This Standard incorporates Amendment No. 1 (DECEMBER 2022). The start and end of changes introduced by the Amendment are indicated in the text by tags including the Amendment number 1.*

Amendment No. 1 to this Standard was prepared by the Australian members of the Joint Standards Australia/Standards New Zealand Committee CT-001, Communications Cabling. As a consequence of Amendment No. 1, which is published as an Australian-only amendment, this Standard will be redesignated from AS/NZS 11801.1 to AS 11801.1. A1

A1 The objective of this Standard is to specify requirements that are common to the other parts of the AS 11801 series. A1 Cabling specified by this Standard supports a wide range of services including voice, data, and video that may also incorporate the supply of power.

A1 This Standard specifies the following:

(a) In Australia, the fundamental structure and configuration of generic cabling requirements within the types of premises defined by the other parts of the AS 11801 series.

(b) Channel transmission and environmental performance requirements.

(c) Link performance requirements.

(d) Backbone cabling reference implementations in support of the parts of the AS 11801 series.

(e) Component performance requirements, referring to available International Standards for components and test methods where appropriate.

(f) Test procedures to verify conformance to the cabling transmission performance requirements of the AS 11801 series.

A list of all parts in the AS 11801 series can be found in the Standards Australia online catalogue. A1

This Standard is an adoption with national modifications, and has been reproduced from ISO/IEC 11801-1:2017, *Information Technology — Generic cabling for customer premises — Part 1: General requirements* and its Technical Corrigendum No. 1 (2018). The modifications in Appendices ZZ and ZA are additional requirements. Appendix ZB provides additional information. These appendices have been added at the end of the source text.

This Standard is structured as follows:

(i) Preface.

(ii) ISO/IEC 11801-1:2017 (unedited from the contents page to the final clause of the source document) and its Corrigendum No. 1 (2018).

Documents
Document Sharing Hub

© Standards Australia Limited 2022

Full document details: AS 11801.1-2019 (2022)

(iii) Appendix ZZ lists the variations to ISO/IEC 11801-1:2017 for the application of this Standard in Australia.

(iv) Appendix ZA provides information on the location of requirements related to modular plug terminated links (MPTL) that were contained in this Standard prior to Amendment No. 1. Requirements for MPTL are now contained within AS 14763.4.

(v) Appendix ZB lists other communication cabling standards and regulations.

As this document has been reproduced from an International Standard, the following applies:

(A) In the source text "this part of ISO/IEC 11801" should read "this Australian Standard".

(B) A full point substitutes for a comma when referring to a decimal marker.

Australian or Australian/New Zealand Standards that are identical adoptions of international normative references may be used interchangeably. Refer to the online catalogue for information on specific Standards.

The terms "normative" and "informative" are used in Standards to define the application of the appendices or annexes to which they apply. A "normative" appendix or annex is an integral part of a Standard, whereas an "informative" appendix or annex is only for information and guidance.

Documents
Document Sharing Hub
© Standards Australia Limited 2022
Full document details: AS 11801.1-2019 (2022)

CONTENTS

FOREWORD 11
INTRODUCTION 13
1 Scope 15
2 Normative references 15
3 Terms, definitions, abbreviations and symbols 20
3.1 Terms and definitions 20
3.2 Abbreviations 27
3.3 Symbols 29
3.3.1 Variables 29
3.3.2 Indices 30
4 Conformance 30
5 Structure of generic cabling 31
5.1 Functional elements 31
5.2 Interfaces 32
5.3 Cabling subsystems 32
5.3.1 Cabling subsystem 1 32
5.3.2 Cabling subsystems $n \geq 2$ 33
5.3.3 Common subsystems 33
5.3.4 Tie cabling 34
5.3.5 Channel and permanent link 34
6 Channel performance requirements 34
6.1 General 34
6.2 Environmental performance 34
6.2.1 General 34
6.2.2 Environmental classification 35
6.3 Balanced cabling transmission performance 37
6.3.1 General 37
6.3.2 Component choice 38
6.3.3 Channel parameters 38
6.4 Coaxial cabling transmission performance 64
6.4.1 General 64
6.4.2 Component choice 65
6.4.3 Channel parameters 65
6.5 Optical fibre cabling transmission performance 67
6.5.1 Component choice 67
6.5.2 Channel parameters 67
7 Link performance requirements 67
7.1 General 67
7.2 Balanced cabling 68
7.2.1 General 68
7.2.2 Return loss 69
7.2.3 Insertion loss/attenuation 70
7.2.4 NEXT 72
7.2.5 Attenuation to crosstalk ratio at the near-end 76
7.2.6 Attenuation to crosstalk ratio at the far-end 78
7.2.7 Direct current loop resistance 82

AVA Documents
Document Sharing Hub

© Standards Australia Limited 2022

Full document details: AS 11801.1-2019 (2022)

7.2.8 Direct current resistance unbalance 83
7.2.9 Propagation delay 83
7.2.10 Delay skew 84
7.2.11 Unbalance attenuation and coupling attenuation 86
7.2.12 Alien crosstalk 89
7.3 Coaxial cabling 94
7.3.1 General 94
7.3.2 Return loss 94
7.3.3 Insertion loss 94
7.3.4 Direct current loop resistance 95
7.3.5 DC current carrying capacity 95
7.3.6 Screening attenuation 95
7.4 Optical fibre cabling 95
8 Reference implementation for backbone cabling subsystems 96
8.1 General 96
8.2 Balanced cabling 96
8.2.1 Component choice 96
8.2.2 Dimensions 96
8.3 Optical fibre cabling 97
8.3.1 General 97
8.3.2 Component selection 98
8.3.3 Dimensions 98
9 Cable requirements 98
9.1 General 98
9.2 Operating environment 98
9.3 Balanced cables 98
9.3.1 Basic requirements 98
9.3.2 Balanced cables of Category 5 through 7_A, 8.1 and 8.2 99
9.3.3 Balanced cables of Category BCT-B 101
9.4 Coaxial cables 103
9.4.1 General 103
9.4.2 Environmental characteristics 103
9.4.3 Mechanical characteristics 103
9.4.4 Electrical characteristics 104
9.5 Optical fibre cable (cabled optical fibres) 104
9.5.1 Mechanical and environmental characteristics 104
9.5.2 Cabled optical fibre Categories 105
10 Connecting hardware requirements 106
10.1 General requirements 106
10.1.1 Overview 106
10.1.2 Location 106
10.1.3 Design 106
10.1.4 Operating environment 107
10.1.5 Mounting 109
10.1.6 Installation practices 109
10.1.7 Marking and colour coding 110
10.2 Category 5 through 7_A, 8.1, and 8.2 connecting hardware for balanced cabling 110

AVA Documents
Document Sharing Hub
© Standards Australia Limited 2022

Full document details: AS 11801.1-2019 (2022)

10.2.1 General ... 110
10.2.2 Performance marking ... 110
10.2.3 Mechanical characteristics ... 110
10.2.4 Electrical characteristics ... 112
10.2.5 Additional requirements ... 124
10.3 BCT-B connecting hardware ... 125
10.4 Connecting hardware for use with coaxial cabling for BCT applications ... 125
10.4.1 General requirements ... 125
10.4.2 Performance marking ... 125
10.4.3 Electrical characteristics ... 125
10.5 Optical fibre connecting hardware ... 126
10.5.1 General requirements ... 126
10.5.2 Marking and colour coding ... 127
10.5.3 Mechanical and optical characteristics ... 127
10.6 Connecting hardware in accordance with IEC 60603-7 series ... 128
10.7 Connecting hardware in accordance with IEC 61076-3-104 ... 129
10.8 Connecting hardware in accordance with IEC 61076-2-101 (Type D, 4 poles) ... 129
10.9 Connecting hardware in accordance with IEC 61076-2-109 (Type X, 8 poles) ... 129
10.10 Connecting hardware in accordance with IEC 61169-2 and IEC 61169-24 (Type F) ... 130
10.11 Connecting hardware for two optical fibres ... 130
10.12 Connecting hardware for twelve and twenty-four optical fibres ... 130
11 Cord requirements ... 131
11.1 General ... 131
11.2 Operating environment ... 131
11.3 Balanced cords of Category 5 through 7_A, 8.1, 8.2 and BCT-B ... 131
11.3.1 General ... 131
11.3.2 Identification ... 131
11.3.3 Operating environment ... 132
11.3.4 Return loss ... 132
11.3.5 NEXT ... 132
11.4 Coaxial cords ... 135
11.5 Optical fibre cords ... 135
11.5.1 General ... 135
11.5.2 Identification ... 136
11.5.3 Performance requirements for patch cords ... 136
Annex A (normative) Conformance testing procedures for balanced cabling of Classes A to F_A, I and II and optical fibre cabling ... 137
A.1 General ... 137
A.2 Channel and link performance testing ... 137
A.2.1 General ... 137
A.2.2 Conformance testing of balanced cabling channels, and links ... 137
A.2.3 Installation conformance testing of optical fibre cabling channels ... 138
A.3 Overview of test schedules ... 138
Annex B (normative) Mechanical and environmental performance testing of connecting hardware for balanced cabling ... 141
B.1 Overview ... 141
B.2 Solderless connections ... 141
B.3 Free and fixed connectors (modular plugs and jacks) ... 142

AVA Documents
Document Sharing Hub

© Standards Australia Limited 2022

Full document details: AS 11801.1-2019 (2022)

B.4 Other connecting hardware 143
Annex C (informative) Electromagnetic characteristics 145
Annex D (informative) Acronyms for balanced cables 146
Annex E (informative) Supported applications 148
E.1 Supported applications for balanced cabling 148
E.2 Supported applications for optical fibre cabling 151
E.3 Supported applications for coaxial cabling 154
E.4 Supported industrial applications for optical fibre cabling 155
Annex F (informative) Optical fibre cable OM1, OM2 and OS1 156
Bibliography 157

Figure 1 – Relationships between the generic cabling documents produced by ISO/IEC JTC 1/SC 25 14
Figure 2 – General functional elements 31
Figure 3 – Interconnect models 31
Figure 4 – Cross-connect models 32
Figure 5 – Equipment and test interfaces 32
Figure 6 – Link options 68
Figure 7 – Link designations 68
Figure 8 – Backbone cabling model 96
Figure 9 – Pin grouping and pair assignments for IEC 60603-7 series interface for Categories 5, 6, 6_A and 8.1 (front view of fixed connector (jack), not to scale) 128
Figure 10 – Pin grouping and pair assignment for the IEC 60603-7 series interface for Categories 7, 7_A, 8.2 and BCT-B (front view of fixed connector (jack), not to scale) 129
Figure 11 – Pin grouping and pair assignments for the IEC 61076-3-104 interface for Categories 7, 7_A, 8.2 and BCT-B (front view of fixed connector (jack), not to scale) 129
Figure 12 – Four position jack pin and pair grouping assignments for IEC 61076-2-101 connecting hardware (front view of connector) 129
Figure 13 – Eight position jack pin and pair grouping assignments for IEC 61076-2-109 connecting hardware (front view of connector) 130
Figure 14 – Conductor assignment of IEC 61169-2 and IEC 61169-24 (Type F) connector 130
Figure 15 – Optical fibre assignments for connecting hardware for two optical fibres 130
Figure 16 – Optical fibre assignments for connecting hardware for 12 and 24 optical fibres (front view of fixed or free connector) 131
Figure D.1 – Cable naming schema 146
Figure D.2 – Cable types 147

Table 1 – Channel environments 35
Table 2 – Details of environmental classification 36
Table 3 – Return loss for a channel 39
Table 4 – Informative return loss values for a channel at key frequencies 40
Table 5 – Insertion loss for a channel 41
Table 6 – Informative insertion loss values for a channel at key frequencies 42
Table 7 – NEXT for a channel 43
Table 8 – Informative NEXT values for a channel at key frequencies 44

Documents
Document Sharing Hub
© Standards Australia Limited 2022
Full document details: AS 11801.1-2019 (2022)

Table 9 – PS NEXT for a channel 45
Table 10 – Informative PS NEXT values for a channel at key frequencies 46
Table 11 – Informative ACR-N values for a channel at key frequencies 47
Table 12 – Informative PS ACR-N values for a channel at key frequencies 48
Table 13 – ACR-F for a channel 49
Table 14 – Informative ACR-F values for a channel at key frequencies 50
Table 15 – PS ACR-F for a channel 51
Table 16 – Informative PS ACR-F values for a channel at key frequencies 52
Table 17 – DC loop resistance for a channel 52
Table 18 – Propagation delay for a channel 53
Table 19 – Informative propagation delay values for a channel at key frequencies 54
Table 20 – Delay skew for a channel 55
Table 21 – TCL for channel for unscreened systems 56
Table 22 – Informative TCL values for unscreened channels at key frequencies 56
Table 23 – TCL for Class I and II screened channels 56
Table 24 – Informative TCL values for Class I and II screened channels at key frequencies 57
Table 25 – ELTCTL for channel for unscreened systems 57
Table 26 – Informative ELTCTL values for unscreened channels at key frequencies 58
Table 27 – ELTCTL for Class I and II channels 58
Table 28 – Informative ELTCTL values for Class I and II channels at key frequencies 58
Table 29 – Coupling attenuation for a channel for screened systems 59
Table 30 – PS ANEXT for a channel 60
Table 31 – Informative PS ANEXT values for a channel at key frequencies 60
Table 32 – PS $ANEXT_{avg}$ for a channel 61
Table 33 – Informative PS $ANEXT_{avg}$ values for a channel at key frequencies 61
Table 34 – PS AACR-F for a channel 62
Table 35 – Informative PS AACR-F values for a channel at key frequencies 63
Table 36 – PS $AACR\text{-}F_{avg}$ for a channel 63
Table 37 – Informative PS $AACR\text{-}F_{avg}$ values for a channel at key frequencies 64
Table 38 – Alien crosstalk and coupling attenuation for screened channels 64
Table 39 – Return loss for a channel 65
Table 40 – Insertion loss for a channel 65
Table 41 – Informative insertion loss values for a channel at key frequencies 66
Table 42 – DC loop resistance for a channel 66
Table 43 – DC current carrying capacity for a channel 66
Table 44 – Operating voltage for a channel 66
Table 45 – Screening attenuation for a channel 67
Table 46 – Return loss for 2-connection or 3-connection link 69
Table 47 – Informative return loss values for links at key frequencies 70
Table 48 – Insertion loss for 2-connection or 3-connection link 71
Table 49 – Informative insertion loss values for links with maximum implementation at key frequencies 72

AVA Documents
Document Sharing Hub

© Standards Australia Limited 2022

Table 50 – NEXT for 2-connection or 3-connection link 72
Table 51 – Informative NEXT values for links with maximum implementation at key frequencies 74
Table 52 – PS NEXT for 2-connection or 3-connection link 75
Table 53 – Informative PS NEXT values for links with maximum implementation at key frequencies 76
Table 54 – Informative ACR-N values for links with maximum implementation at key frequencies 77
Table 55 – Informative PS ACR-N values for links with maximum implementation at key frequencies 78
Table 56 – ACR-F for 2-connection or 3-connection link 79
Table 57 – Informative ACR-F values for links with maximum implementation at key frequencies 80
Table 58 – PS ACR-F for 2-connection or 3-connection link 81
Table 59 – Informative PS ACR-F values for links with maximum implementation at key frequencies 82
Table 60 – DC loop resistance for 2-connection or 3-connection link 82
Table 61 – Informative DC loop resistance for links with maximum implementation 83
Table 62 – Propagation delay for 2-connection or 3-connection link 84
Table 63 – Informative propagation delay values for links with maximum implementation at key frequencies 84
Table 64 – Delay skew for 2-connection or 3-connection link 85
Table 65 – Informative delay skew for links with maximum implementation 86
Table 66 – TCL for Class I and II screened permanent links 87
Table 67 – Informative TCL values for Class I and II screened permanent links at key frequencies 87
Table 68 – ELTCTL for Class I and II permanent links 88
Table 69 – Informative ELTCTL values for Class I and II permanent links at key frequencies 88
Table 70 – Coupling attenuation for a screened permanent link 89
Table 71 – Informative coupling attenuation values for screened permanent links at key frequencies 89
Table 72 – PS ANEXT for 2-connection or 3-connection link 90
Table 73 – Informative PS ANEXT values for links at key frequencies 91
Table 74 – PS $ANEXT_{avg}$ for 2-connection or 3-connection link 91
Table 75 – Informative PS $ANEXT_{avg}$ values for links at key frequencies 92
Table 76 – PS AACR-F for 2-connection or 3-connection link 92
Table 77 – Informative PS AACR-F values for links at key frequencies 93
Table 78 – PS $AACR\text{-}F_{avg}$ for a 2-connection or 3-connection link 93
Table 79 – Informative PS $AACR\text{-}F_{avg}$ values for links at key frequencies 94
Table 80 – Alien crosstalk and coupling attenuation for screened links 94
Table 81 – Insertion loss for link 95
Table 82 – Informative insertion loss values for link at key frequencies 95
Table 83 – DC loop resistance for link 95
Table 84 – Backbone link length equations 97

AVA Documents
Document Sharing Hub
© Standards Australia Limited 2022

Full document details: AS 11801.1-2019 (2022)

Table 85 – Basic requirements of balanced cables 99
Table 86 – Mechanical characteristics of balanced cables of Category 5, 6, 6_A, 7 and 7_A 99
Table 87 – Mechanical characteristics of balanced cables of Category BCT-B 102
Table 88 – Minimum transmission performance requirements BCT-B balanced pairs 102
Table 89 – Basic requirements of coaxial cables 103
Table 90 – Mechanical performance requirements for coaxial BCT cables 103
Table 91 – Minimum electrical performance requirements for cables of Category BCT-C 104
Table 92 – Cabled optical fibre attenuation (maximum), dB/km 105
Table 93 – Multimode optical fibre modal bandwidth 105
Table 94 – Environmental performance specifications for balanced cabling connecting hardware 107
Table 95 – Environmental performance specifications for coaxial cabling connecting hardware 108
Table 96 – Environmental performance specifications for optical fibre cabling connecting hardware 109
Table 97 – Mechanical characteristics of connecting hardware for use with balanced cabling 111
Table 98 – Matrix of backward compatible mated free and fixed connector (plug and jack) performance 113
Table 99 – Return loss 113
Table 100 – Informative return loss values for connector at key frequencies 114
Table 101 – Insertion loss 114
Table 102 – Informative insertion loss values for connector at key frequencies 115
Table 103 – Near-end crosstalk (NEXT) 115
Table 104 – Informative NEXT values for connector at key frequencies 116
Table 105 – Power sum near-end crosstalk (PS NEXT) (for information only) 116
Table 106 – Informative PS NEXT values for connector at key frequencies 117
Table 107 – Far-end crosstalk (FEXT) 117
Table 108 – Informative FEXT values for connector at key frequencies 118
Table 109 – Power sum far-end crosstalk (PS FEXT) (for information only) 118
Table 110 – Informative PS FEXT values for connector at key frequencies 119
Table 111 – Input to output resistance 119
Table 112 – Input to output resistance unbalance 119
Table 113 – DC current carrying capacity 119
Table 114 – Propagation delay 120
Table 115 – Delay skew 120
Table 116 – Transverse conversion loss (TCL) 120
Table 117 – Informative TCL values for connector at key frequencies 121
Table 118 – Transverse conversion transfer loss (TCTL) 121
Table 119 – Informative TCTL values for connector at key frequencies 121
Table 120 – Transfer impedance (screened connectors only) 122
Table 121 – Informative transfer impedance values (screened connectors only) at key frequencies 122

AVA Documents
Document Sharing Hub

© Standards Australia Limited 2022

Full document details: AS 11801.1-2019 (2022)

Table 122 – Coupling attenuation (screened connectors only) 122
Table 123 – Informative coupling attenuation values (screened connectors only) at key frequencies 122
Table 124 – Insulation resistance 123
Table 125 – Voltage proof 123
Table 126 – Power sum alien near-end crosstalk (PS ANEXT) 123
Table 127 – Informative PS ANEXT values at key frequencies 123
Table 128 – Power sum alien far-end crosstalk (PS AFEXT) 124
Table 129 – Informative PS AFEXT values at key frequencies 124
Table 130 – Coupling attenuation for BCT-B connecting hardware 125
Table 131 – Formulae for return loss limits for BCT-C connecting hardware 125
Table 132 – Return loss limits for BCT-C connecting hardware at key frequencies 126
Table 133 – Formulae for insertion loss limits for BCT-C connecting hardware 126
Table 134 – Insertion loss limits for BCT-C connecting hardware at key frequencies 126
Table 135 – Screening attenuation limits for BCT-C connecting hardware 126
Table 136 – Attenuation of connecting hardware for optical fibre 127
Table 137 – Return loss of optical fibre connecting hardware 127
Table 138 – Electrical characteristics of terminal equipment outlets intended for use with balanced cabling 128
Table 139 – Minimum return loss for balanced cords 132
Table 140 – Informative values of return loss for balanced cords at key frequencies 132
Table 141 – Assumptions for cabling components used in the calculation of NEXT informative values 134
Table 142 – Informative values of NEXT for 2 m balanced cords at key frequencies 134
Table 143 – Informative values of NEXT for 5 m balanced cords at key frequencies 135
Table 144 – Informative values of NEXT for 10 m balanced cords at key frequencies 135
Table A.1 – Test regime for reference conformance and installation conformance – Balanced cabling of Classes A through F_A, BCT-B, I and II 139
Table A.2 – Test regime for reference conformance and installation conformance – Optical fibre cabling 140
Table B.1 – Standards for solderless connections 141
Table B.2 – Standards for free and fixed connectors (modular plugs and jacks) 142
Table B.3 – Standards for M12 style connectors 142
Table B.4 – Free and fixed connectors (modular plugs and jacks) operations matrix 143
Table B.5 – Reference for reliability testing of other connecting hardware 143
Table B.6 – Other connecting hardware operations matrix 144
Table E.1 – Applications using balanced cabling 149
Table E.2 – Industrial applications using balanced cabling 150
Table E.3 – Modular connector pin assignment for applications 151
Table E.4 – Maximum channel attenuation for supported applications using optical fibre cabling 152
Table E.5 – Maximum channel lengths supported by optical fibre applications for multimode optical fibre 153
Table E.6 – Maximum channel length supported by optical fibre applications for single-mode optical fibre 154

AVA Documents
Document Sharing Hub
© Standards Australia Limited 2022

Full document details: AS 11801.1-2019 (2022)

Table E.7 – Supported BCT applications using balanced cabling 154
Table E.8 – Supported BCT applications using coaxial cabling 155
Table E.9 – Supported applications and maximum channel lengths with cabled multimode optical fibres 155
Table E.10 – Supported applications and maximum channel lengths with cabled all-silica single-mode optical fibres 155
Table F.1 – Grandfathered OM1, OM2 and OS1 specifications..... 156
Table F.2 – Supported applications and maximum channel lengths with cabled all-silica multimode optical fibres 156
Table F.3 – Supported applications and maximum channel lengths with cabled all-silica singlemode optical fibres 156

Documents
Document Sharing Hub

© Standards Australia Limited 2022

Full document details: AS 11801.1-2019 (2022)

INFORMATION TECHNOLOGY – GENERIC CABLING FOR CUSTOMER PREMISES –

Part 1: General requirements

FOREWORD

1) ISO (the International Organization for Standardization) and IEC (the International Electrotechnical Commission) form the specialized system for worldwide standardization. National bodies that are members of ISO or IEC participate in the development of International Standards through technical committees established by the respective organization to deal with particular fields of technical activity. ISO and IEC technical committees collaborate in fields of mutual interest. Other international organizations, governmental and non-governmental, in liaison with ISO and IEC, also take part in the work. In the field of information technology, ISO and IEC have established a joint technical committee, ISO/IEC JTC 1.

2) The formal decisions or agreements of IEC and ISO on technical matters express, as nearly as possible, an international consensus of opinion on the relevant subjects since each technical committee has representation from all interested IEC National Committees and ISO member bodies.

3) IEC, ISO and ISO/IEC publications have the form of recommendations for international use and are accepted by IEC National Committees and ISO member bodies in that sense. While all reasonable efforts are made to ensure that the technical content of IEC, ISO and ISO/IEC publications is accurate, IEC or ISO cannot be held responsible for the way in which they are used or for any misinterpretation by any end user.

4) In order to promote international uniformity, IEC National Committees and ISO member bodies undertake to apply IEC, ISO and ISO/IEC publications transparently to the maximum extent possible in their national and regional publications. Any divergence between any ISO, IEC or ISO/IEC publication and the corresponding national or regional publication should be clearly indicated in the latter.

5) ISO and IEC do not provide any attestation of conformity. Independent certification bodies provide conformity assessment services and, in some areas, access to IEC marks of conformity. ISO or IEC are not responsible for any services carried out by independent certification bodies.

6) All users should ensure that they have the latest edition of this publication.

7) No liability shall attach to IEC or ISO or its directors, employees, servants or agents including individual experts and members of their technical committees and IEC National Committees or ISO member bodies for any personal injury, property damage or other damage of any nature whatsoever, whether direct or indirect, or for costs (including legal fees) and expenses arising out of the publication of, use of, or reliance upon, this ISO/IEC publication or any other IEC, ISO or ISO/IEC publications.

8) Attention is drawn to the normative references cited in this publication. Use of the referenced publications is indispensable for the correct application of this publication.

9) Attention is drawn to the possibility that some of the elements of this ISO/IEC publication may be the subject of patent rights. ISO and IEC shall not be held responsible for identifying any or all such patent rights.

International Standard ISO/IEC 11801-1 was prepared by subcommittee 25: Interconnection of information technology equipment, of ISO/IEC joint technical committee 1: Information technology.

This first edition, together with ISO/IEC 11801-2, cancels and replaces ISO/IEC 11801:2002, Amendment 1:2008 and Amendment 2:2010. This edition constitutes a technical revision.

This edition includes the following significant technical changes with respect to the previous edition:

a) standard re-structured to contain those elements and requirements, that are common to generic cabling systems (in application fields such as offices and industrial premises), namely requirements for common elements of topology and transmission performance of channels, links and related components;

b) addition of balanced cabling channel and link Classes BCT-B, I and II;

c) addition of coaxial cabling channel and link Class BCT-C;

d) addition of balanced cabling component requirements for Category BCT-B, 8.1, and 8.2;

AVA Documents
Document Sharing Hub
© Standards Australia Limited 2022
Full document details: AS 11801.1-2019 (2022)

e) addition of coaxial cabling component requirements for Category BCT-C;

f) addition of cabled fibres of Category OS1a, and OM5;

g) removal of silica optical fibre cabling;

h) optical fibre cable OM1, OM2 and OS1 has been moved to an informative annex.

This International Standard has been approved by vote of the member bodies, and the voting results may be obtained from the address given on the second title page.

This document has been drafted in accordance with the ISO/IEC Directives, Part 2.

A list of all parts in the ISO/IEC 11801 series, published under the general title *Information technology – Generic cabling for customer premises*, can be found on the IEC website.

Documents
Document Sharing Hub

© Standards Australia Limited 2022

Full document details: AS 11801.1-2019 (2022)

INTRODUCTION

This document contains general requirements in support of the other premises-specific referenced cabling design documents developed by ISO/IEC JTC 1/SC 25 including ISO/IEC 11801-2, ISO/IEC 11801-3, ISO/IEC 11801-4, ISO/IEC 11801-5, ISO/IEC 11801-6 and related Technical Reports (including the ISO/IEC TR 11801-99xx series, ISO/IEC TR 24704, ISO/IEC TR 24750 and ISO/IEC TR 29125).

This document specifies a multi-vendor cabling system which may be implemented with material from single or multiple sources, and is related to:

a) International Standards for cabling components developed by technical committees of the IEC, for example copper cables and connectors as well as optical fibre cables and connectors (see Clause 2 and bibliography);

b) standards for the testing of installed cabling (see Clause 2 and bibliography);

c) applications developed by technical committees of the IEC, by subcommittees of ISO/IEC JTC 1, by study groups of ITU-T, for example for LANs and ISDN, and by IEEE 802;

d) planning and installation guides and other standards which take into account the needs of specific applications for the configuration and the use of cabling systems on customer premises (e.g. ISO/IEC 14709 series, ISO/IEC 14763 series, ISO/IEC 30129, and ISO/IEC 18598).

Physical layer requirements for the applications listed in Annex E have been analysed to determine their compatibility with cabling classes specified in this document. These application requirements, together with statistics concerning premises-specific topologies and cabling models of the supported standards, have been used to develop the requirements for balanced, coaxial and optical fibre cabling.

As a result, generic cabling defined within this document:

1) specifies balanced cabling channel and link Classes A, B, C, D, E, E_A, F, F_A, I and II meeting both the requirements of standardized applications and to support the development and implementation of future applications;

2) specifies balanced cabling channel and link Class BCT-B to support the delivery of BCT applications;

3) specifies coaxial cabling channel and link Class BCT-C to support the delivery of BCT applications;

4) specifies optical fibre cabling meeting the requirements of standardized applications and exploiting component capabilities to ease the implementation of applications developed in the future;

5) invokes component requirements and specifies cabling implementations that ensure performance of links and of channels that meet or exceed the requirements for cabling classes.

Figure 1 shows the schematic and contextual relationships between the standards relating to information technology cabling produced by ISO/IEC JTC 1/SC 25, namely the ISO/IEC 11801 series of standards for generic cabling design, standards for the installation, operation and administration of generic cabling and for testing of installed generic cabling.

Documents
Document Sharing Hub
© Standards Australia Limited 2022

Full document details: AS 11801.1-2019 (2022)

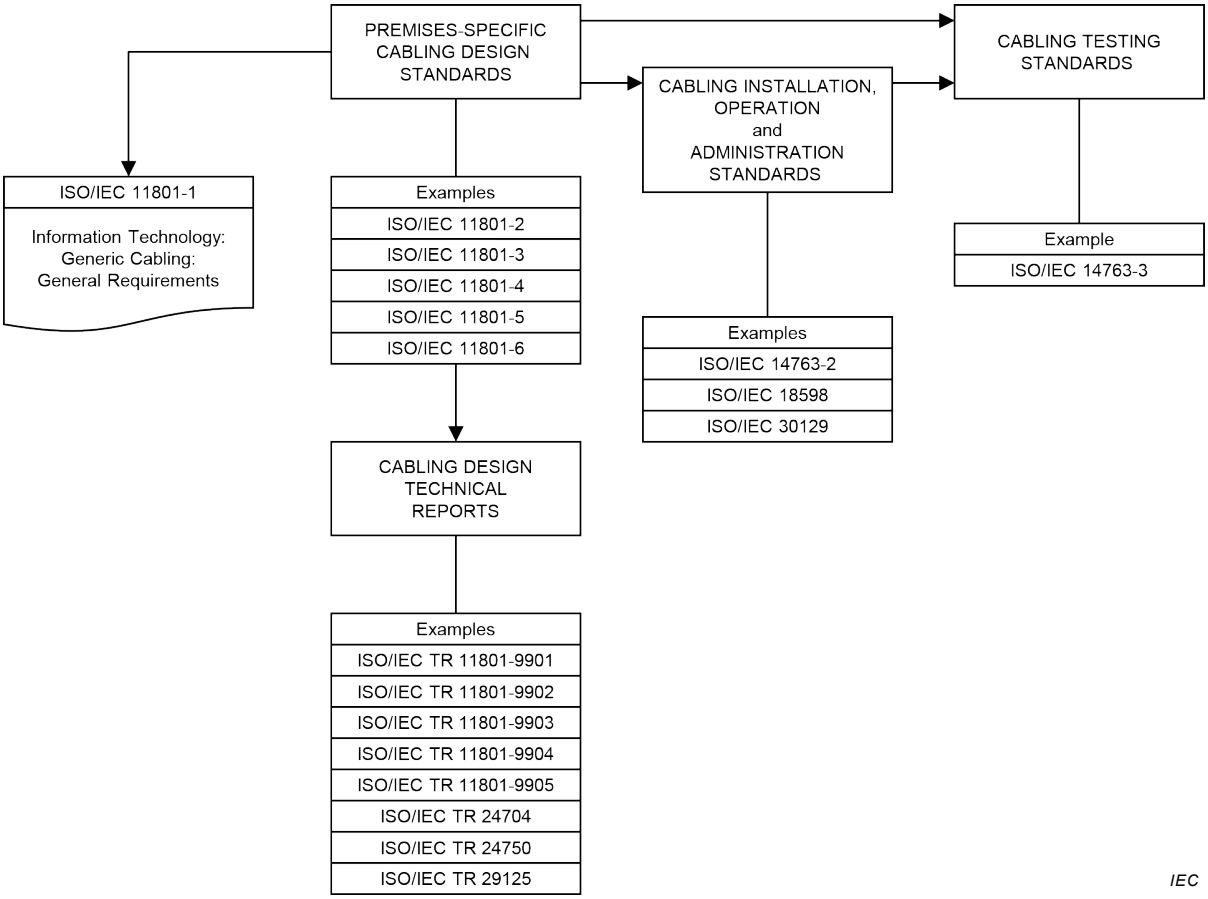

Figure 1 – Relationships between the generic cabling documents produced by ISO/IEC JTC 1/SC 25

This document refers to International Standards for components and test methods wherever appropriate International Standards are available.

© Standards Australia Limited 2022

Full document details: AS 11801.1-2019 (2022)

INFORMATION TECHNOLOGY – GENERIC CABLING FOR CUSTOMER PREMISES –

Part 1: General requirements

1 Scope

This part of ISO/IEC 11801 specifies requirements that are common to the other parts of the ISO/IEC 11801 series. Cabling specified by this document supports a wide range of services including voice, data, and video that may also incorporate the supply of power.

This document specifies:

a) the fundamental structure and configuration of generic cabling requirements within the types of premises defined by the other parts of the ISO/IEC 11801 series,

b) channel transmission and environmental performance requirements,

c) link performance requirements,

d) backbone cabling reference implementations in support of the parts of the ISO/IEC 11801 series,

e) component performance requirements, referring to available International Standards for components and test methods where appropriate,

f) test procedures to verify conformance to the cabling transmission performance requirements of the ISO/IEC 11801 series.

NOTE This document does not contain specific conformance requirements. The cabling design documents supported by ISO/IEC 11801-1 incorporate the requirements of this document as part of their individual conformance requirements.

In addition, this document provides information regarding the applications supported by the cabling channels.

2 Normative references

The following documents are referred to in the text in such a way that some or all of their content constitutes requirements of this document. For dated references, only the edition cited applies. For undated references, the latest edition of the referenced document (including any amendments) applies.

IEC 60352-2, *Solderless connections – Part 2: Crimped connections – General requirements, test methods and practical guidance*

IEC 60352-3, *Solderless connections – Part 3: Solderless accessible insulation displacement connections – General requirements, test methods and practical guidance*

IEC 60352-4, *Solderless connections – Part 4: Solderless non-accessible insulation displacement connections – General requirements, test methods and practical guidance*

IEC 60352-5, *Solderless connections – Part 5: Press-in connections – General requirements, test methods and practical guidance*

IEC 60352-6, *Solderless connections – Part 6: Insulation piercing connections – General requirements, test methods and practical guidance*

IEC 60352-7, *Solderless connections – Part 7: Spring clamp connections – General requirements, test methods and practical guidance*

IEC 60352-8, *Solderless connections – Part 8: Compression mount connections – General requirements, test methods and practical guidance*

Documents
Document Sharing Hub
© Standards Australia Limited 2022

Full document details: AS 11801.1-2019 (2022)

IEC 60512-4-1, *Connectors for electronic equipment – Tests and measurements – Part 4-1: Voltage stress tests – Test 4a: Voltage proof*

IEC 60512-4-2, *Connectors for electronic equipment – Tests and measurements – Part 4-2: Voltage stress tests – Test 4b: Partial discharge*

IEC 60512-6-2, *Connectors for electronic equipment – Tests and measurements – Part 6-2: Dynamic stress tests – Test 6b: Bump*

IEC 60512-6-3, *Connectors for electronic equipment – Tests and measurements – Part 6-3: Dynamic stress tests – Test 6c: Shock*

IEC 60512-6-4, *Connectors for electronic equipment – Tests and measurements – Part 6-4: Dynamic stress tests – Test 6d: Vibration (sinusoidal)*

IEC 60512-11-4, *Connectors for electronic equipment – Tests and measurements – Part 11-4: Climatic tests – Test 11d: Rapid change of temperature*

IEC 60512-11-7, *Connectors for electronic equipment – Tests and measurements – Part 11-7: Climatic tests – Test 11g: Flowing mixed gas corrosion test*

IEC 60512-11-9, *Connectors for electronic equipment – Tests and measurements – Part 11-9: Climatic tests – Test 11i: Dry heat*

IEC 60512-11-10, *Connectors for electronic equipment – Tests and measurements – Part 11-10: Climatic tests – Test 11j: Cold*

IEC 60512-11-12, *Connectors for electronic equipment – Tests and measurements – Part 11-12: Climatic tests – Test 11m: Damp heat, cyclic*

IEC 60512-16-4, *Connectors for electronic equipment – Tests and measurements – Part 16-4: Mechanical tests on contacts and terminations – Test 16d: Tensile strength (crimped connections)*

IEC 60512-17-4, *Connectors for electronic equipment – Tests and measurements – Part 17-4: Cable clamping tests – Test 17d: Cable clamp resistance to cable torsion*

IEC 60512-19-3, *Electromechanical components for electronic equipment – Basic testing procedures and measuring methods – Part 19: Chemical resistance tests – Section 3: Test 19c – Fluid resistance*

IEC 60512-23-3, *Electromechanical components for electronic equipment – Basic testing procedures and measuring methods – Part 23-3: Test 23c: Shielding effectiveness of connectors and accessories*

IEC 60512-99-001, *Connectors for electronic equipment – Tests and measurements – Part 99-001: Test schedule for engaging and separating connectors under electrical load – Test 99a: Connectors used in twisted pair communication cabling with remote power*

IEC 60529, *Degrees of protection provided by enclosures (IP Code)*

IEC 60603-7, *Connectors for electronic equipment – Part 7: Detail specification for 8-way, unshielded, free and fixed connectors*

IEC 60603-7-1, *Connectors for electronic equipment – Part 7-1: Detail specification for 8-way, shielded, free and fixed connectors*

IEC 60603-7-2, *Connectors for electronic equipment – Part 7-2: Detail specification for 8-way, unshielded, free and fixed connectors, for data transmissions with frequencies up to 100 MHz*

IEC 60603-7-3, *Connectors for electronic equipment – Part 7-3: Detail specification for 8-way, shielded, free and fixed connectors, for data transmission with frequencies up to 100 MHz*

Documents
Document Sharing Hub

© Standards Australia Limited 2022

Full document details: AS 11801.1-2019 (2022)

IEC 60603-7-4, *Connectors for electronic equipment – Part 7-4: Detail specification for 8-way, unshielded, free and fixed connectors, for data transmissions with frequencies up to 250 MHz*

IEC 60603-7-5, *Connectors for electronic equipment – Part 7-5: Detail specification for 8-way, shielded, free and fixed connectors, for data transmissions with frequencies up to 250 MHz*

IEC 60603-7-7, *Connectors for electronic equipment – Part 7-7: Detail specification for 8-way, shielded, free and fixed connectors for data transmission with frequencies up to 600 MHz*

IEC 60603-7-41, *Connectors for electronic equipment – Part 7-41: Detail specification for 8-way, unshielded, free and fixed connectors, for data transmissions with frequencies up to 500 MHz*

IEC 60603-7-51, *Connectors for electronic equipment – Part 7-51: Detail specification for 8-way, shielded, free and fixed connectors, for data transmissions with frequencies up to 500 MHz*

IEC 60603-7-71, *Connectors for electronic equipment – Part 7-71: Detail specification for 8-way, shielded, free and fixed connectors, for data transmission with frequencies up to 1 000 MHz*

IEC 60603-7-81, *Connectors for electronic equipment – Part 7-81: Detail specification for 8-way, shielded, free and fixed connectors, for data transmissions with frequencies up to 2 000 MHz*

IEC 60603-7-82, *Connectors for electronic equipment – Part 7-82: Detail specification for 8-way, 12 contacts, shielded, free and fixed connectors, for data transmission with frequencies up to 2 000 MHz*

IEC 60793-1-40, *Optical fibres – Part 1-40: Measurement methods and test procedures – Attenuation*

IEC 60793-2-10, *Optical fibres – Part 2-10: Product specifications – Sectional specification for category A1 multimode fibres*

IEC 60793-2-50, *Optical fibres – Part 2-50: Product specifications – Sectional specification for class B single-mode fibres*

IEC 60794-1-21, *Optical fibre cables – Part 1-21: Generic specification – Basic optical cable test procedures – Mechanical test methods*

IEC 60794-1-22, *Optical fibre cables – Part 1-22: Generic specification – Basic optical cable test procedures – Environmental test methods*

IEC 60794-2, *Optical fibre cables – Part 2: Indoor cables – Sectional specification*

IEC 60794-2-51, *Optical fibre cables – Part 2-51: Indoor cables – Detail specification for simplex and duplex cables for use in cords for controlled environment*

IEC 60794-3, *Optical fibre cables – Part 3: Outdoor cables – Sectional specification*

IEC 60794-5, *Optical fibre cables – Part 5: Sectional specification – Microduct cabling for installation by blowing*

IEC 60966-2-4, *Radio frequency and coaxial cable assemblies – Part 2-4: Detail specification for cable assemblies for radio and TV receivers – Frequency range 0 MHz to 3 000 MHz, IEC 61169-2 connectors*

IEC 60966-2-5, *Radio frequency and coaxial cable assemblies – Part 2-5: Detail specification for cable assemblies for radio and TV receivers – Frequency range 0 MHz to 1 000 MHz, IEC 61169-2 connectors*

Documents
Document Sharing Hub
© Standards Australia Limited 2022

Full document details: AS 11801.1-2019 (2022)

IEC 60966-2-6, *Radio frequency and coaxial cable assemblies – Part 2-6: Detail specification for cable assemblies for radio and TV receivers – Frequency range 0 MHz to 3 000 MHz, IEC 61169-24 connectors*

IEC 61076-2-101, *Connectors for electronic equipment – Product requirements – Part 2-101: Circular connectors – Detail specification for M12 connectors with screw-locking*

IEC 61076-2-109, *Connectors for electronic equipment – Product requirements – Part 2-109: Circular connectors – Detail specification for connectors with M 12 × 1 screw-locking, for data transmission frequencies up to 500 MHz*

IEC 61076-3-104, *Connectors for electrical and electronic equipment – Product requirements – Part 3-104: Detail specification for 8-way, shielded free and fixed connectors for data transmissions with frequencies up to 2 000 MHz*

IEC 61076-3-106, *Connectors for electronic equipment – Product requirements – Part 3-106: Rectangular connectors – Detail specification for protective housings for use with 8-way shielded and unshielded connectors for industrial environments incorporating the IEC 60603-7 series interface*

IEC 61076-3-110, *Connectors for electronic equipment – Product requirements – Part 3-110: Detail specification for shielded, free and fixed connectors for data transmission with frequencies up to 3 000 MHz*

IEC 61156 (all parts), *Multicore and symmetrical pair/quad cables for digital communications*

IEC 61156-1, *Multicore and symmetrical pair/quad cables for digital communications – Part 1: Generic specification*

IEC 61156-2, *Multicore and symmetrical pair/quad cables for digital communications – Part 2: Symmetrical pair/quad cables with transmission characteristics up to 100 MHz – Horizontal floor wiring – Sectional specification*

IEC 61156-3, *Multicore and symmetrical pair/quad cables for digital communications – Part 3: Work area cable – Sectional specification*

IEC 61156-4, *Multicore and symmetrical pair/quad cables for digital communications – Part 4: Riser cables – Sectional specification*

IEC 61156-5:2009, *Multicore and symmetrical pair/quad cables for digital communications – Part 5: Symmetrical pair/quad cables with transmission characteristics up to 1 000 MHz – Horizontal floor wiring – Sectional specification*
IEC 61156-5:2009/AMD1:2012

IEC 61156-5-1, *Multicore and symmetrical pair/quad cables for digital communications – Part 5-1: Symmetrical pair/quad cables with transmission characteristics up to 1 000 MHz – Horizontal floor wiring – Blank detail specification*

IEC 61156-6, *Multicore and symmetrical pair/quad cables for digital communications – Part 6: Symmetrical pair/quad cables with transmission characteristics up to 1 000 MHz – Work area wiring – Sectional specification*

IEC 61156-6-1, *Multicore and symmetrical pair/quad cables for digital communications – Part 6-1: Symmetrical pair/quad cables with transmission characteristics up to 1 000 MHz – Work area wiring – Blank detail specification*

IEC 61156-7, *Multicore and symmetrical pair/quad cables for digital communications – Part 7: Symmetrical pair cables with transmission characteristics up to 1 200 MHz – Sectional specification for digital and analog communication cables*

IEC 61156-9:2016, *Multicore and symmetrical pair/quad cables for digital communications – Part 9: Cables for channels with transmission characteristics up to 2 GHz – Sectional specification*

Documents
Document Sharing Hub

© Standards Australia Limited 2022

Full document details: AS 11801.1-2019 (2022)

IEC 61156-10, *Multicore and symmetrical pair/quad cables for digital communications – Part 10: Cables for cords with transmission characteristics up to 2 GHz – Sectional specification*

IEC 61169-2, *Radio-frequency connectors – Part 2: Sectional specification – Radio frequency coaxial connectors of type 9,52*

IEC 61169-24, *Radio-frequency connectors – Part 24: Sectional specification – Radio frequency coaxial connectors with screw coupling, typically for use in 75 Ω cable networks (type F)*

IEC 61196-1, *Coaxial communication cables – Part 1: Generic specification – General, definitions and requirements*

IEC 61196-6, *Coaxial communication cables – Part 6: Sectional specification for CATV drop cables*

IEC 61196-7, *Coaxial communication cables – Part 7: Sectional specification for cables for BCT cabling in accordance with ISO/IEC 15018 – Indoor drop cables for systems operating at 5 MHz – 3 000 MHz*

IEC 61300-2-1, *Fibre optic interconnecting devices and passive components – Basic test and measurement procedures – Part 2-1: Tests – Vibration (sinusoidal)*

IEC 61300-2-4, *Fibre optic interconnecting devices and passive components – Basic test and measurement procedures – Part 2-4: Tests – Fibre/cable retention*

IEC 61300-2-5, *Fibre optic interconnecting devices and passive components – Basic test and measurement procedures – Part 2-5: Tests – Torsion*

IEC 61300-2-9, *Fibre optic interconnecting devices and passive components – Basic test and measurement procedures – Part 2-9: Tests – Shock*

IEC 61300-2-18, *Fibre optic interconnecting devices and passive components – Basic test and measurement procedures – Part 2-18: Tests – Dry heat – High temperature endurance*

IEC 61300-2-22, *Fibre optic interconnecting devices and passive components – Basic test and measurement procedures – Part 2-22: Tests – Change of temperature*

IEC 61300-2-34, *Fibre optic interconnecting devices and passive components – Basic test and measurement procedures – Part 2-34: Tests – Resistance to solvents and contaminating fluids of interconnecting components and closures*

IEC 61300-2-44, *Fibre optic interconnecting devices and passive components – Basic test and measurement procedures – Part 2-44: Tests – Flexing of the strain relief of fibre optic devices*

IEC 61300-2-46, *Fibre optic interconnecting devices and passive components – Basic test and measurement procedures – Part 2-46: Tests – Damp heat, cyclic*

IEC 61753-1, *Fibre optic interconnecting devices and passive components – Performance standard – Part 1: General and guidance for performance standards*

IEC 61753-021-2, *Fibre optic interconnecting devices and passive components – Performance standard – Part 021-2: Grade C/3 single-mode fibre optic connectors for category C – Controlled environment*

IEC 61753-022-2, *Fibre optic interconnecting devices and passive components – Performance standard – Part 022-2: Fibre optic connectors terminated on multimode fibre for category C – Controlled environment*

IEC 61754 (all parts), *Fibre optic interconnecting devices and passive components – Fibre optic connector interfaces*

Documents
Document Sharing Hub
© Standards Australia Limited 2022

Full document details: AS 11801.1-2019 (2022)

IEC 61754-20-100, *Fibre optic interconnecting devices and passive components – Part 20-100: Interface standard for LC connectors with protective housings related to IEC 61076-3-106*

IEC 61935-1, *Specification for the testing of balanced and coaxial information technology cabling – Part 1: Installed balanced cabling as specified in ISO/IEC 11801 and related standards*

IEC 61935-2, *Specification for the testing of balanced and coaxial information technology cabling – Part 2: Cords as specified in ISO/IEC 11801 and related standards*

IEC 62012-1, *Multicore and symmetrical pair/quad cables for digital communications to be used in harsh environments – Part 1: Generic specification*

IEC 62664-1-1, *Fibre optic interconnecting devices and passive components – Fibre optic connector product specifications – Part 1-1: LC-PC duplex multimode connectors terminated on IEC 60793-2-10 category A1a fibre*

ISO 4892-1, *Plastics – Methods of exposure to laboratory light sources – Part 1: General guidance*

ISO 4892-2, *Plastics – Methods of exposure to laboratory light sources – Part 2: Xenon-arc lamps*

ISO/IEC 14763-2, *Information technology – Implementation and operation of customer premises cabling – Part 2: Planning and installation*

ISO/IEC 14763-3, *Information technology – Implementation and operation of customer premises cabling – Part 3: Testing of optical fibre cabling*

3 Terms, definitions, abbreviations and symbols

3.1 Terms and definitions

For the purposes of this document, the following terms and definitions apply.

3.1.1
administration
methodology defining the documentation requirements of a cabling system and its containment, the labelling of functional elements and the process by which moves, additions and changes are recorded

3.1.2
alien crosstalk
signal coupling from a disturbing pair of a channel to a disturbed pair of another channel

Note 1 to entry: This also applies to the signal coupling from a disturbing pair within a link or component, used to create a channel, to a disturbed pair within a link or component, used to create another channel.

Note 2 to entry: This is also known as exogenous crosstalk.

3.1.3
alien far-end crosstalk loss
signal coupling between a disturbing pair of a channel and a disturbed pair of another channel, measured at the far-end

Note 1 to entry: This also applies to the measurement of the signal coupling between a disturbing pair within a link or component, used to create a channel, and a disturbed pair within a link or component, used to create another channel.

Note 2 to entry: This is also known as exogenous far-end crosstalk loss.

3.1.4
alien near-end crosstalk loss
signal coupling between a disturbing pair of a channel and a disturbed pair of another channel, measured at the near-end

Documents
Document Sharing Hub

© Standards Australia Limited 2022

Full document details: AS 11801.1-2019 (2022)

Note 1 to entry: This also applies to the measurement of signal coupling between a disturbing pair within a link or component, used to create a channel, and a disturbed pair within a link or component, used to create another channel.

Note 2 to entry: This is also known as exogenous near-end crosstalk loss.

3.1.5
application
system, including its associated transmission and power feeding method, which is supported by telecommunications cabling

3.1.6
attenuation
decrease in magnitude of power of a signal in transmission between points

Note 1 to entry: Attenuation indicates the total losses on cable, expressed as the ratio of power output to power input.

3.1.7
attenuation to alien crosstalk ratio at the far-end
difference, in decibels, between the alien far-end crosstalk loss from a disturbing pair of a channel and the insertion loss of a disturbed pair in another channel

Note 1 to entry: This also applies to the calculation using the alien far-end crosstalk loss from a disturbing pair within a link or component, used to create a channel, and the insertion loss of a disturbed pair within a link or component, used to create another channel.

Note 2 to entry: This is also known as attenuation to exogenous crosstalk ratio at the far-end.

3.1.8
attenuation to crosstalk ratio at the far-end
difference, in decibels, between the far-end crosstalk loss from a disturbing pair of a channel and the insertion loss of a disturbed pair of the same channel

Note 1 to entry: This also applies to the calculation using the far-end crosstalk loss from a disturbing pair within a link or component, used to create a channel, and the insertion loss of a disturbed pair within the link or component, of the same channel.

3.1.9
attenuation to crosstalk ratio at the near-end
difference, in decibels, between the near-end crosstalk loss from a disturbing pair of a channel and the insertion loss of a disturbed pair of the same channel

Note 1 to entry: This also applies to the calculation using the near-end crosstalk loss from a disturbing pair within a link or component, used to create a channel, and the insertion loss of a disturbed pair within the link or component, of the same channel.

3.1.10
average power sum alien near-end crosstalk loss
calculated average of the power sum alien near-end crosstalk loss of the pairs of a disturbed channel

Note 1 to entry: This also applies to the calculation using the pairs within a link used to create a channel.

Note 2 to entry: This is also known as average power sum exogenous near-end crosstalk loss.

3.1.11
average power sum attenuation to alien crosstalk ratio far-end
calculated average of the power sum attenuation to alien crosstalk ratio at the far-end of the pairs of a disturbed channel

Note 1 to entry: This also applies to the calculation using the pairs within a link used to create a channel.

Note 2 to entry: This is also known as average power sum attenuation to exogenous crosstalk ratio far-end.

3.1.12
balanced cable
cable consisting of one or more metallic symmetrical cable elements (twisted pairs or quads)

3.1.13
broadcast and communications technologies
group of applications including radio and TV

Documents
Document Sharing Hub
© Standards Australia Limited 2022

Full document details: AS 11801.1-2019 (2022)

3.1.14
building backbone cable
fixed cable connecting distributors within the building backbone cabling subsystem

3.1.15
building distributor
distributor in which the building backbone cable(s) terminate(s) and at which connections to the campus backbone cable(s) may be made

3.1.16
building entrance facility
facility that provides all necessary mechanical and electrical services and which complies with all relevant regulations, for the entry of telecommunications cables into a building

3.1.17
cable
assembly of one or more cable units in an overall sheath

3.1.18
cable element
smallest construction unit in a cable

EXAMPLE Balanced pair, quad, single fibre, or coaxial pair.

3.1.19
cable sharing
using a single cable to support the simultaneous transmission of more than one application

3.1.20
cable unit
single assembly of one or more cable elements of the same type

Note 1 to entry: The cable unit may have a screen.

3.1.21
cabling
system of telecommunications cables, cords and connecting hardware that supports the connection of information technology equipment

3.1.22
cabling design document
relevant International Standard or Technical Report for cabling design developed by ISO/IEC JTC 1/SC 25

3.1.23
campus
premises containing one or more buildings

3.1.24
campus backbone cable
fixed cable connecting distributors within the campus backbone cabling subsystem

3.1.25
campus distributor
distributor from which the campus backbone cabling starts

3.1.26
channel
end-to-end transmission path connecting any two pieces of application-specific equipment

3.1.27
centralized optical fibre cabling
cabling technique that creates a combined backbone/horizontal channel from the equipment areas to the centralized cross-connect or interconnect by allowing the use of pull-through cables or splices

AVA Documents
Document Sharing Hub

© Standards Australia Limited 2022

Full document details: AS 11801.1-2019 (2022)

3.1.28
coaxial pair
uniform transmission line consisting of two cylindrical conductors with the same axis

[SOURCE: IEC 60050-704:1993, 704-02-05]

3.1.29
connecting hardware
device or combination of devices used to connect cables or cable elements

3.1.30
connection
mated device or combination of devices including terminations used to connect cables or cable elements to other cables, cable elements or application-specific equipment

3.1.31
connector
component normally attached to a cable or mounted on a piece of apparatus (excluding an adapter) for joining separable parts of a cabling system

3.1.32
connector sharing
using connecting hardware to support the simultaneous transmission of more than one application

3.1.33
consolidation point
connection point in the horizontal cabling subsystem between a floor distributor and a terminal equipment outlet

3.1.34
consolidation point cord
cabling between the consolidation point and the terminal equipment outlet(s)

3.1.35
consolidation point link
part of the permanent link between the floor distributor and the consolidation point, including the connecting hardware at each end

3.1.36
cord
cable, cable unit or cable element with a minimum of one termination

3.1.37
coupling attenuation
ratio, in decibels, of the differential power in the signal pairs to the power generated by the excited common mode currents

3.1.38
cross-connect
passive connection between cabling subsystems using a patch cord or jumper

3.1.39
cross-connection
connection by means of a cross-connect

3.1.40
data centre
structure, or group of structures, dedicated to the centralized accommodation, interconnection and operation of information technology and network telecommunications equipment providing data storage, processing and transport services, together with all the facilities and infrastructures for power distribution and environmental control, together with the necessary levels of resilience and security required to provide the desired service availability

Documents
Document Sharing Hub
© Standards Australia Limited 2022
Full document details: AS 11801.1-2019 (2022)

Note 1 to entry: A structure can consist of multiple buildings and/or spaces with specific functions to support the primary function.

Note 2 to entry: The boundaries of the structure or space considered to be the data centre which includes the information and communication technology equipment and supporting environmental controls can be defined within a larger structure or building.

[SOURCE: ISO/IEC 30134-1:2016, 3.1.4]

3.1.41
distributor
functional element enabling the termination and connection of cabling subsystems to other cabling subsystems or transmission equipment

3.1.42
equipment cord
cord connecting one end of the cabling subsystem in a distributor to transmission equipment

3.1.43
equipment interface
point at which application-specific equipment can be connected to the generic cabling or network access cabling

3.1.44
external network interface
termination point providing demarcation of external telecommunications service provision

3.1.45
fixed connector
balanced cabling jack, coaxial adapter (integrated with or housing a coaxial free connector), or optical fibre adapter (integrated with or housing an optical fibre free connector)

3.1.46
free connector
balanced, coaxial, or optical fibre cabling plug

3.1.47
functional performance
level of transmission performance that is able to support the intended Class of applications

3.1.48
generic cabling
structured telecommunications cabling system, capable of supporting a wide range of standardized applications

3.1.49
hybrid cable
assembly of two or more cable units of different types in an overall sheath

3.1.50
information and communications technologies
group of applications using information and communications (telecommunications) technologies

3.1.51
information technologies
telecommunications
technology concerned with the transmission, emission and reception of signs, signals, writing, images and sounds by cable, radio, optical or other electromagnetic systems

3.1.52
insertion loss
loss incurred by inserting a device between a source and load of equal impedance

Note 1 to entry: The device itself may have a different impedance from the load and source impedance.

AVA Documents
Document Sharing Hub

© Standards Australia Limited 2022

Full document details: AS 11801.1-2019 (2022)

Note 2 to entry: The terms operational attenuation or operational insertion loss are sometimes associated with this definition.

3.1.53
insertion loss deviation
difference between the measured insertion loss of cascaded components and the insertion loss determined by the sum of the individual component insertion losses

3.1.54
interconnect
passive connection to a cabling subsystem not using a patch cord or jumper

3.1.55
interface
point at which connections are made to the generic cabling

3.1.56
jack
balanced cabling socket connector

3.1.57
jumper
cable, cable unit or cable element without connectors used for a cross-connection

3.1.58
keying
mechanical feature of a connector system, which guarantees polarization or prevents the connection to an incompatible socket or optical fibre adapter

3.1.59
link
transmission path between two cabling system interfaces, including the connections at each end

3.1.60
longitudinal conversion loss
logarithmic ratio, expressed in decibels, of the common mode injected signal at the near-end to the resultant differential signal at the near-end of a balanced pair

3.1.61
longitudinal conversion transfer loss
logarithmic ratio, expressed in decibels, of the common mode injected signal at the near-end to the resultant differential signal at the far-end of a balanced pair

3.1.62
multi-unit cable
balanced cable containing more than four pairs

3.1.63
network access cable
cable connecting an external network interface to a generic cabling distributor

3.1.64
operating temperature
stabilized temperature of the local environment, measured on the outside sheath of the cable, combining ambient temperature with any increase due to the application being supported

3.1.65
optical fibre cable
cable comprising one or more optical fibre cable elements

3.1.66
pair
two conductors of a balanced transmission line

Documents
Document Sharing Hub
© Standards Australia Limited 2022

Full document details: AS 11801.1-2019 (2022)

EXAMPLE Twisted pair cable element or one side circuit in a quad cable element.

3.1.67
patch cord
cord used for a cross-connection

3.1.68
patch panel
panel at a distributor presenting the interface(s) of cabling subsystems to facilitate administrative moves and changes using patch cords or jumpers

Note 1 to entry: The panel also enables interfaces to be connected to transmission equipment using interconnect cords.

3.1.69
permanent link
transmission path between distributors or between distributor 1 and the terminal equipment outlet including the connections at both ends

Note 1 to entry: The permanent link does not include TE area cords, equipment cords, patch cords and jumpers, but includes the connection at each end. It can include an optional consolidation point.

3.1.70
power sum alien far-end crosstalk loss
power sum of the signal coupling between multiple disturbing pairs of one or more channels, links or components and a disturbed pair of another channel, link or component, measured at the far-end

Note 1 to entry: This is also known as power sum exogenous far-end crosstalk loss.

3.1.71
power sum alien near-end crosstalk loss
power sum of the signal coupling between multiple disturbing pairs of one or more channels, links or components and a disturbed pair of another channel, link or component, measured at the near-end

Note 1 to entry: This is also known as power sum exogenous near-end crosstalk loss.

3.1.72
power sum attenuation to alien crosstalk ratio at the far-end
difference, in decibels, between the power sum alien far-end crosstalk loss from multiple disturbing pairs of one or more channels, links or components and the insertion loss of a disturbed pair in another channel, link or component

Note 1 to entry: This is also known as power sum attenuation to exogenous crosstalk ratio at the far-end.

3.1.73
power sum attenuation to crosstalk ratio at the far-end
difference, in decibels, between the power sum far-end crosstalk loss from multiple disturbing pairs of a channel, link or component and the insertion loss of a disturbed pair in the same channel, link or component

3.1.74
power sum attenuation to crosstalk ratio at the near-end
difference, in decibels, between the power sum near-end crosstalk loss from multiple disturbing pairs of a channel, link or component and the insertion loss of a disturbed pair in the same channel, link or component

3.1.75
quad
cable element that comprises four insulated conductors twisted together

Note 1 to entry: Two diametrically facing conductors form a transmission pair also referred to as a side circuit.

3.1.76
requirement to be met by design
requirement which may be met by calculation and selection of appropriate materials and installation techniques, where either there is no test method specified that allows verification or there is no requirement for verification by testing

AVA Documents
Document Sharing Hub

© Standards Australia Limited 2022

Full document details: AS 11801.1-2019 (2022)

3.1.77
screened balanced cable
balanced cable with an overall screen and/or screens for the individual elements

3.1.78
side circuit
two diametrically facing conductors in a quad that form a pair

3.1.79
splice
joining of conductors or optical fibres, generally from separate sheaths

3.1.80
telecommunications outlet
terminal equipment outlet
fixed connecting device which provides an interface to the terminal equipment

Note 1 to entry: The term telecommunications outlet is used in some of the other parts of the ISO/IEC 11801 series, while the term terminal equipment outlet is used in this document.

3.1.81
terminal equipment
equipment at an outlet used to access information provided by transmission equipment

3.1.82
test interface
location where a connection between test equipment and the cabling to be tested occurs

3.1.83
tie cables
optional fixed cables connecting distributors of the same hierarchical level which are installed in addition to the basic hierarchical topology

3.1.84
transmission equipment
active equipment used to distribute information from distributors to other distributors and to outlets

3.1.85
transverse conversion loss
ratio between the common mode signal power and the injected differential mode signal power

3.1.86
twisted pair
cable element that consists of two insulated conductors twisted together in a determined fashion to form a balanced transmission line

3.1.87
unscreened balanced cable
balanced cable without any screens

3.2 Abbreviations

AACR-F	attenuation to alien crosstalk ratio at the far-end
AC	alternating current
ACR	attenuation to crosstalk ratio
ACR-F	attenuation to crosstalk ratio at the far-end
ACR-N	attenuation to crosstalk ratio at the near-end
AFEXT	alien far-end crosstalk (loss)
ANEXT	alien near-end crosstalk (loss)
APC	angled physical contact

Documents
Document Sharing Hub
© Standards Australia Limited 2022

Full document details: AS 11801.1-2019 (2022)

ATM	asynchronous transfer mode
BCT	broadcast and communications technologies, sometimes referred to as HEM (home entertainment & multimedia)
BD	building distributor
BEF	building entrance facility
B-ISDN	broadband ISDN
BO	broadcast outlet
CATV	community antenna television
CD	campus distributor
CP	consolidation point
CSMA/CD	carrier sense multiple access with collision detection
DAB	digital audio broadcasting
DC	direct current
DCE	data circuit terminating equipment
DRL	distributed return loss
DTE	data terminal equipment
DVB	digital video broadcasting
DVB–C	digital video broadcasting – cable
DVB–S	digital video broadcasting – satellite
DVB–T	digital video broadcasting – terrestrial
EI	equipment interface
ELTCTL	equal level TCTL
EMC	electromagnetic compatibility
EO	equipment outlet
EQP	transmission equipment
FEXT	far-end crosstalk attenuation (loss)
ffs	for further study
FOIRL	fibre optic inter-repeater link
IC	integrated circuit
ICT	information and communications technology
IDC	insulation displacement connection
IEC	International Electrotechnical Commission
IL	insertion loss
ILD	insertion loss deviation
IPC	insulation piercing connection
ISDN	integrated services digital network
ISO	International Organization for Standardization
IT	information technology
JTC	joint technical committee
LAN	local area network
LCL	longitudinal to differential conversion loss
LCTL	longitudinal to differential conversion transfer loss
LDP	local distribution point

Documents
Document Sharing Hub

© Standards Australia Limited 2022

Full document details: AS 11801.1-2019 (2022)

Min.	minimum
N/A	not applicable
NEXT	near-end crosstalk attenuation (loss)
OF	optical fibre
PC	physical contact
PL	permanent link
PMD	physical media dependent sublayer
PS AACR-F	power sum attenuation to alien crosstalk ratio at the far-end
PS AACR-F_{avg}	average power sum attenuation to alien crosstalk ratio at the far-end
PS ACR	power sum attenuation to crosstalk ratio
PS ACR-F	power sum attenuation to crosstalk ratio at the far-end
PS ACR-N	power sum attenuation to crosstalk ratio at the near-end
PS AFEXT	power sum alien far-end crosstalk (loss)
PS $AFEXT_{norm}$	normalized power sum alien far-end crosstalk (loss)
PS ANEXT	power sum alien near-end crosstalk (loss)
PS $ANEXT_{avg}$	average power sum alien near-end crosstalk (loss)
PS FEXT	power sum FEXT (loss)
PS NEXT	power sum NEXT (loss)
PVC	polyvinyl chloride
RL	return loss
SC	subscriber connector (optical fibre connector)
SCP	service concentration point
SO	service outlet
TCL	transverse conversion loss
TCTL	transverse conversion transfer loss
TE	terminal equipment
TI	test interface
TO	telecommunications outlet
TP-PMD	twisted pair physical medium dependent
TV	television

NOTE The abbreviation “lg” in the formulas signifies “$\log_{10}$”.

3.3 Symbols

3.3.1 Variables

A	coefficient of transmission matrix
B	length of backbone cable or coefficient of transmission matrix
C	length of the CP cable, designation for connector, or coefficient of transmission matrix
$\boxed{C}$	connection
D	coefficient of transmission matrix
F	combined length of patch cords/jumpers, equipment and work area cords
H	maximum length of the fixed horizontal cable
K	coefficient of cable attenuation increase
L	length of cable

AVA Documents
Document Sharing Hub
© Standards Australia Limited 2022

Full document details: AS 11801.1-2019 (2022)

l	number of the disturbing channel
N	number of disturbing channels
X	ratio of work area cable attenuation to fixed horizontal cable attenuation
Y	ratio of the CP cable attenuation to the fixed horizontal cable attenuation
Z	complex impedance
NVP	velocity relative to speed of light ($NVP = v/c$)
c	speed of light in vacuum
e	base of natural logarithm
f	frequency
i	current number of disturbing pair
j	imaginary operator
k	current number of disturbed pair
lg	log10
n	total number of pairs ($i \leq k \leq n$)
t	time
v	speed of propagation

3.3.2 Indices

C2	index to denominate a characteristic, measured from the connector at the floor distributor (second connector)
CH	index to denote the channel
CP	index to denote the consolidation point
PL	index to denominate a permanent link characteristic
TO	index to denominate a characteristic, measured from the TO
avg	index to denominate average of the associated parameter across all of the pairs in the same channel or link
cable	index to denominate a cable characteristic
channel	index to denominate a channel characteristic
connector	index to denominate a connector characteristic
cord cable	index to indicate a characteristic of the cable used for cords
in	index to indicate an input condition
local	index to denominate a locally measured characteristic
norm	index to denominate scaling of the associated parameter
remote	index to denominate a characteristic measured at a distance
term	index to indicate a terminating condition

4 Conformance

This document does not contain specific cabling installation conformance requirements. The cabling design documents supported by this document incorporate the requirements of this document as part of their individual conformance requirements.

Annex A contains requirements and recommendations for testing of channels, and links in order to determine their conformance to the transmission performance requirements of the relevant cabling design documents.

Documents
Document Sharing Hub

© Standards Australia Limited 2022

Full document details: AS 11801.1-2019 (2022)

5 Structure of generic cabling

5.1 Functional elements

The generic cabling specified by the cabling design standards features some or all of functional elements shown in Figure 2.

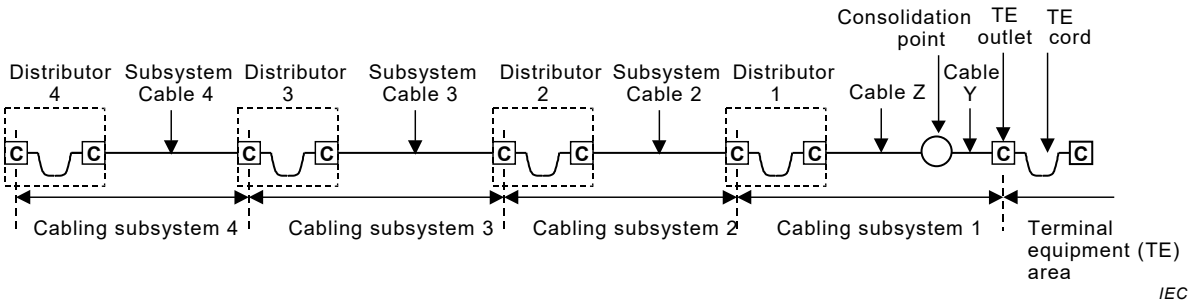

Figure 2 – General functional elements

These comprise

a) terminal equipment (TE) outlet,

b) consolidation point (CP),

c) subsystem cable 1 (divided into cable Y and cable Z if consolidation point is present),

d) distributor 1,

e) other subsystem cables (2, 3 and 4 in Figure 2),

f) other distributors (2, 3 and 4 in Figure 2).

Groups of these functional elements are connected together to form cabling subsystems.

The presence of, and the terms applied to, each of the functional elements are specified in the cabling design standards.

Connections between cabling subsystems are either active, requiring application-specific equipment, or passive. Connection to application-specific equipment adopts either an interconnect or a cross-connect approach (see Figure 3 and Figure 4). Passive connections between cabling subsystems are generally achieved using cross-connections by way of either patch cords, jumpers or splices.

In the case of centralized cabling, passive connections in the distributors are achieved by using cross-connections or interconnections. In addition, for centralized optical fibre cabling, it is possible to create connections at the distributors using splices although this reduces the ability of the cabling to support re-configuration.

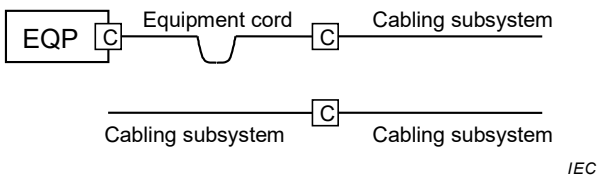

Figure 3 – Interconnect models

Documents
Document Sharing Hub
© Standards Australia Limited 2022

Full document details: AS 11801.1-2019 (2022)

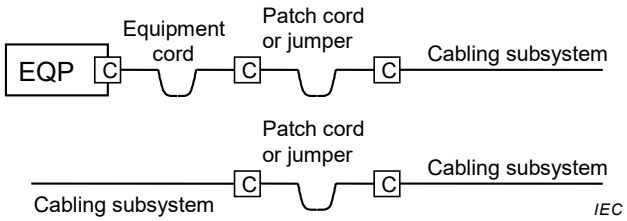

Figure 4 – Cross-connect models

5.2 Interfaces

Equipment interfaces to generic cabling are located at the ends of each subsystem. Any distributor may have an equipment interface to an external service at any port and may use either interconnects as shown in Figure 3 or cross-connects as shown in Figure 4. The consolidation point does not provide an equipment interface to the generic cabling system.

Figure 5 shows the potential equipment interfaces to the cabling subsystems.

Test interfaces to generic cabling are located at the ends of each subsystem and at consolidation points, where present. Figure 5 shows the potential test interfaces to the cabling subsystems.

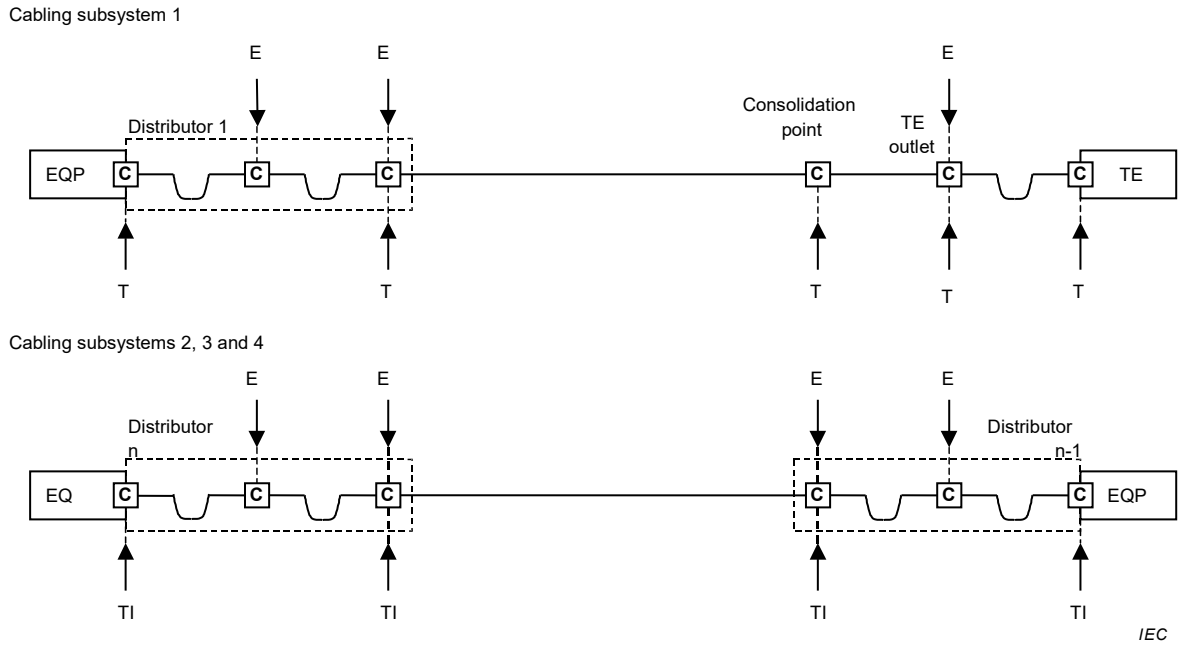

Figure 5 – Equipment and test interfaces

5.3 Cabling subsystems

5.3.1 Cabling subsystem 1

The cabling subsystem 1 extends from distributor 1 to the terminal equipment (TE) outlet(s) connected to it. The subsystem includes

a) the subsystem cable 1 (or cables Y and Z of Figure 2, if a consolidation point is supported by the cable design standard and is present),

b) jumpers and patch cords in distributor 1,

c) the mechanical termination of the subsystem cable 1 (or cable Y of Figure 2, if a consolidation point is supported by the cable design standard and is present) at the TE outlet,

Documents
Document Sharing Hub

© Standards Australia Limited 2022

Full document details: AS 11801.1-2019 (2022)

d) the mechanical termination of the subsystem cable 1 at distributor 1 including the connecting hardware, for example of the interconnect or cross-connect (see Figure 3 and Figure 4),

e) a consolidation point (optional, if supported by the cable design standard),

f) the TE outlets.

Although terminal equipment cords and equipment cords are used to connect terminal and transmission equipment respectively to the cabling subsystem, they are not considered part of the cabling subsystem because they are application specific.

5.3.2 Cabling subsystems $n \geq 2$

The cabling subsystems n (for $n \geq 2$) extend from distributor n to distributor $n - 1$. When present, the subsystem includes

a) the cables n,

b) jumpers and patch cords in distributor n and distributor $n - 1$,

c) the connecting hardware on which the cables n are terminated (at distributor n and distributor $n - 1$).

Although equipment cords are used to connect the transmission equipment to the cabling subsystem, they are not considered part of the cabling subsystem because they can be application specific.

5.3.3 Common subsystems

5.3.3.1 General

The following subsystems and associated distributors are used in two or more parts of the ISO/IEC 11801 series and are detailed here to allow the relevant references to be made.

5.3.3.2 Campus backbone cabling subsystem

When present, the campus backbone cabling subsystem includes

a) the campus backbone cables,

b) components in building entrance facilities,

c) the jumper and patch cords at the campus and building distributors (usually located in separate buildings),

d) the connecting hardware on which the campus backbone cables are terminated (at the campus and building distributors).

5.3.3.3 Building backbone cabling subsystem

The building backbone cabling subsystem extends from building distributor to the following distributors connected to it:

a) in ISO/IEC 11801-2: floor distributor,

b) in ISO/IEC 11801-3: floor distributor,

c) in ISO/IEC 11801-4: primary home distributor,

d) in ISO/IEC 11801-6: service distributor.

When present, the building backbone cabling subsystem includes

1) the building backbone cables,

2) the jumper and patch cords at both distributors,

3) the connecting hardware on which the building backbone cables are terminated (at both distributors).

Documents
Document Sharing Hub
© Standards Australia Limited 2022

Full document details: AS 11801.1-2019 (2022)

5.3.4 Tie cabling

Tie cables providing direct peer-to-peer connections between distributors are optional and, when provided, shall be in addition to that required for the basic hierarchical topology.

When present, the tie cabling includes

a) the tie cables,

b) the jumper and patch cords at both distributors,

c) the connecting hardware on which the tie cables are terminated (at both distributors).

5.3.5 Channel and permanent link

The transmission performance of generic cabling is detailed in Clauses 6 and 7, in terms of the channel and the permanent link.

The channel is the transmission path between equipment such as a LAN switch/hub (EQP in Figure 5) and the terminal equipment. A typical interconnect channel consists of cabling subsystem 1 together with the terminal equipment cord and equipment cord. A typical cross-connect channel consists of cabling subsystem 1 together with the terminal equipment cord, a patch cord or jumper, and equipment cord. Optional consolidation points may be used. For longer reach services the channel may be formed by the connection of two or more subsystems (including terminal equipment cords and equipment cords). The performance of the channel excludes the connections at the application-specific equipment.

A permanent link is the transmission path of an installed cabling subsystem including the connecting hardware at the ends of the installed cable. In cabling subsystem 1, the permanent link consists of the TE outlet, the optional consolidation point (if supported by the cabling design standard), subsystem cable 1 (or cables Y and Z of Figure 2, if a consolidation point is supported by the cable design standard and is present) and the termination of subsystem cable 1 at distributor 1. The permanent link includes the connections at the ends of the installed cabling.

6 Channel performance requirements

6.1 General

The performance of a channel is specified between connections to active equipment. The channel comprises only passive sections of cable, connecting hardware, terminal equipment cords, equipment cords and patch cords. The connections at the active equipment are not taken into account.

The required transmission performance Class of Clause 6 shall be met for all environmental classifications specified for the channel.

Application support depends on channel performance, which in turn depends on cable length, number of connections, and performance of the components within the environments to which the channel is subjected. It may be possible to achieve equivalent channel performance over greater lengths by the use of fewer connections or by using components with higher performance.

6.2 Environmental performance

6.2.1 General

The environmental performance specifications of channels are classified to cover the different conditions under which channels are required to operate.

The environmental classification described in 6.2.2 shall be used for the selection of components and/or the protection afforded to them.

It is possible for the different locations within a channel to be subject to different environments. For example, one end of a channel can be in an office area and the other end of the channel can be subjected to a more severe environment. The description of the channel environment shall be divided up accordingly.

Documents
Document Sharing Hub

© Standards Australia Limited 2022

Full document details: AS 11801.1-2019 (2022)

Furthermore, the applicable environment is that local to the cabling components within the channel. The local environment may, where relevant, be created by installation techniques applied to the channel in order to mitigate more extreme environments than exist within the premises. With regard to temperature, the local environment is considered to be the operating temperature of the cabling.

6.2.2 Environmental classification

This document classifies the environment for generic cabling as defined in Table 1.

Certain environments (e.g. nuclear, chemical, fire, explosive, damage risk from animals, salt mist) demand additional requirements beyond those of 6.2. Further details on specific environments are given in ISO/IEC TR 29106.

Table 1 – Channel environments

	1	2	3
Mechanical rating	M_1	M_2	M_3
Ingress rating	I_1	I_2	I_3
Climatic rating	C_1	C_2	C_3
Electromagnetic rating	E_1	E_2	E_3

The definition of a given classification includes the definition of lower classifications, i.e. channels designed to operate under environmental conditions defined by M_2 shall continue to operate under environmental conditions defined by M_1.

Channel environments may be classified by using any combination of the MICE scheme, e.g. $M_1I_2C_3E_1$. Care should be taken to accurately classify the channel environment in such a way as to allow the selection of suitable components.

The criteria for the MICE classification are based on $M_xI_xC_xE_x$., where "x" can equal 1, 2 or 3 based on the severity of the environment. For example, a typical office space has a minimum requirement of $M_1I_1C_1E_1$.

The environmental Classes are defined in Table 2.

For each M, I, C or E group, the classification of a given environment is determined by the most demanding parameter within the M, I, C or E group. However, the selection of components shall be based on the specific demands of each of the parameters within the M, I, C or E group, which may be less demanding than the overall classification of the group.

Documents
Document Sharing Hub
© Standards Australia Limited 2022

Full document details: AS 11801.1-2019 (2022)

Table 2 – Details of environmental classification

Mechanical	**M_1**	**M_2**	**M_3**
Shock/bump[a]			
Peak acceleration	40 ms^{-2}	100 ms^{-2}	250 ms^{-2}
Vibration			
Displacement amplitude (2 Hz to 9 Hz)	1,5 mm	7,0 mm	15,0 mm
Acceleration amplitude (9 Hz to 500 Hz)	5 ms^{-2}	20 ms^{-2}	50 ms^{-2}
Tensile strength	b	b	b
Crush	45 N over 25 mm (linear) min.	1 100 N over 150 mm (linear) min.	2 200 N over 150 mm (linear) min.
Impact	1 J	10 J	30 J
Bending, flexing and torsion	b	b	b
Ingress	**I_1**	**I_2**	**I_3**
Particulate ingress (max. diameter)	12,5 mm	50 µm	50 µm
Immersion	None	Intermittent liquid jet ≤ 12,5 l/min ≥ 6,3 mm jet > 2,5 m distance	Intermittent liquid jet ≤ 12,5 l/min ≥ 6,3 mm jet > 2,5 m distance and immersion (≤ 1 m for ≤ 30 min)
Climatic and chemical	**C_1**	**C_2**	**C_3**
Ambient temperature	−10 °C to +60 °C	−25 °C to +70 °C	−40 °C to +70 °C
Rate of change of temperature	0,1 °C per minute	1,0 °C per minute	3,0 °C per minute
Humidity	5 % to 85 % (non-condensing)	5 % to 95 % (condensing)	5 % to 95 % (condensing)
Solar radiation	700 Wm^{-2}	1 120 Wm^{-2}	1 120 Wm^{-2}
Liquid pollution[c] Contaminants	Concentration × 10^{-6}	Concentration × 10^{-6}	Concentration × 10^{-6}
Sodium chloride (salt/sea water)	0	< 0,3	< 0,3
Oil (dry-air concentration) (for oil types see [b])	0	< 0,005	< 0,5
Sodium stearate (soap)	None	> 5 × 10^4 aqueous non-gelling	> 5 × 10^4 aqueous gelling
Detergent	None	ffs	ffs
Conductive materials	None	Temporary	Present
Gaseous pollution[c] Contaminants	Mean / Peak (Concentration × 10^{-6})	Mean / Peak (Concentration × 10^{-6})	Mean / Peak (Concentration × 10^{-6})
Hydrogen sulphide	< 0,003 / < 0,01	< 0,05 / < 0,5	< 10 / < 50
Sulphur dioxide	< 0,01 / < 0,03	< 0,1 / < 0,3	< 5 / < 15
Sulphur trioxide (ffs)	< 0,01 / < 0,03	< 0,1 / < 0,3	< 5 / < 15
Chlorine wet (> 50 % humidity)	< 0,000 5 / < 0,001	< 0,005 / < 0,03	< 0,05 / < 0,3
Chlorine dry (< 50 % humidity)	< 0,002 / < 0,01	< 0,02 / < 0,1	< 0,2 / < 1,0
Hydrogen chloride	– / < 0,06	< 0,06 / < 0,3	< 0,6 / 3,0

Documents
Document Sharing Hub

© Standards Australia Limited 2022

Full document details: AS 11801.1-2019 (2022)

Hydrogen fluoride	< 0,001 / < 0,005	< 0,01 / < 0,05	< 0,1 / < 1,0
Ammonia	< 1 / < 5	< 10 / < 50	< 50 / < 250
Oxides of nitrogen	< 0,05 / < 0,1	< 0,5 / < 1	<5 / <10
Ozone	< 0,002 / < 0,005	< 0,025 / < 0,05	< 0,1 / < 1
Electromagnetic	**E_1**	**E_2**	**E_3**
Electrostatic discharge – Contact (0,667 µC)	4 kV	4 kV	4 kV
Electrostatic discharge – Air (0,132 µC)	8 kV	8 kV	8 kV
Radiated RF – AM	3 V/m @ (80 to 1 000) MHz 3 V/m @ (1 400 to 2 000) MHz 1 V/m @ (2 000 to 2 700) MHz	3 V/m @ (80 to 1 000) MHz 3 V/m @ (1 400 to 2 000) MHz 1 V/m @ (2 000 to 2 700) MHz	10 V/m @ (80 to 1 000) MHz 3 V/m @ (1 400 to 2 000) MHz 1 V/m @ (2 000 to 2 700) MHz
Conducted RF	3 V@ 150 kHz to 80 MHz	3 V@ 150 kHz to 80 MHz	10 V@ 150 kHz to 80 MHz
EFT/B (comms)	500 V	500 V	1 000 V
Surge (transient ground potential difference) – signal, line to earth	500 V	1 000 V	1 000 V
Magnetic field (50/60 Hz)	1 Am^{-1}	3 Am^{-1}	30 Am^{-1}
Magnetic field (60 Hz to 20 000 Hz)	ffs	ffs	ffs

[a] Bump: the repetitive nature of the shock experienced by the channel shall be taken into account.

[b] This aspect of environmental classification is installation-specific and should be considered in association with IEC 61918 and the appropriate component specification.

[c] A single dimensional characteristic, i.e. concentration × 10^{-6}, was chosen to unify limits from different standards.

6.3 Balanced cabling transmission performance

6.3.1 General

This document specifies the following Classes for balanced cabling:

a) Class A is specified up to 100 kHz,

b) Class B is specified up to 1 MHz,

c) Class C is specified up to 16 MHz,

d) Class D is specified up to 100 MHz,

e) Class E is specified up to 250 MHz,

f) Class E_A is specified up to 500 MHz,

g) Class F is specified up to 600 MHz,

h) Class F_A is specified up to 1 000 MHz.

A Class A channel is specified so that it will provide the minimum transmission performance to support Class A applications. Similarly, Class B, C, D, E, E_A, F and F_A channels provide the transmission performance to support Class B, C, D, E, E_A, F and F_A applications, respectively. Channels of a given Class will support all applications of a lower Class. Class A is regarded as the lowest Class.

This document specifies the following additional Classes for balanced cabling described in certain parts of the cabling design standards:

Documents
Document Sharing Hub
© Standards Australia Limited 2022

Full document details: AS 11801.1-2019 (2022)

1) Class BCT-B: specified up to 1 000 MHz,
2) Class I and Class II: specified up to 2 000 MHz.

The insertion loss and other length related parameter performance of BCT-B cabling is further subdivided into two sub-Classes, L and M. These sub-Classes have identical performance requirements for all other transmission parameters.

Annex E lists known balanced cabling applications by Class. The requirements in 6.3 are given by limits computed to one decimal place, using the formula for a defined frequency range. The limits for the propagation delay and delay skew are computed to three decimal places. The additional tables are for information only and have limits derived from the relevant formula at key frequencies. Many specifications in 6.3 have a plateau in the specified requirement. These plateaus do not accurately depict the system performance. They have been added for measurement purposes.

6.3.2 Component choice

The parameters specified in 6.3 apply to channels with screened or unscreened cable elements, with or without an overall screen, unless explicitly stated otherwise.

The nominal differential mode impedance of channels is 100 Ω. This is achieved by suitable design and appropriate choice of cabling components (irrespective of their nominal impedance). In the case of cable sharing, additional crosstalk requirements specified in 9.3.2.5.1 should be taken into account.

6.3.3 Channel parameters

6.3.3.1 Return loss

The return loss requirements are only applicable to Classes C through F_A, BCT-B, I, and II.

The return loss (*RL*) of each pair of a channel shall meet the requirements in Table 3.

The *RL* of each pair of a channel at key frequencies is given in Table 4 for information only.

The return loss requirements shall be met at both ends of the cabling. Return loss (*RL*) values at frequencies where the insertion loss (*IL*) is below 3,0 dB are for information only.

© Standards Australia Limited 2022

Full document details: AS 11801.1-2019 (2022)

Table 3 – Return loss for a channel

Class	Frequency MHz	Minimum return loss dB
C	$1 \le f \le 16$	15,0
D	$1 \le f < 20$	17,0
	$20 \le f \le 100$	$30 - 10\lg(f)$
E	$1 \le f < 10$	19,0
	$10 \le f < 40$	$24 - 5\lg(f)$
	$40 \le f \le 250$	$32 - 10\lg(f)$
E_A	$1 \le f < 10$	19,0
	$10 \le f < 40$	$24 - 5\lg(f)$
	$40 \le f < 398.1$	$32 - 10\lg(f)$
	$398,1 \le f \le 500$	6,0
F	$1 \le f < 10$	19,0
	$10 \le f < 40$	$24 - 5\lg(f)$
	$40 \le f < 251,2$	$32 - 10\lg(f)$
	$251,2 \le f \le 600$	8,0
F_A	$1 \le f < 10$	19,0
	$10 \le f < 40$	$24 - 5\lg(f)$
	$40 \le f < 251,2$	$32 - 10\lg(f)$
	$251,2 \le f < 631$	8,0
	$631 \le f \le 1\,000$	$36 - 10\lg(f)$
BCT-B	$1 \le f < 10$	19,0
	$10 \le f < 100$	$24 - 5\lg(f)$
	$100 \le f < 251,2$	$29 - 7,5\lg(f)$
	$251,2 \le f < 600$	$17,2 - 2,6\lg(f)$
	$600 \le f < 1\,000$	$35 - 9\lg(f)$
I	$1 \le f < 10$	19,0
	$10 \le f < 40$	$24 - 5\lg(f)$
	$40 \le f < 130$	16,0
	$130 \le f < 1\,000$	$35 - 9\lg(f)$
	$1\,000 \le f < 1600$	8,0
	$1\,600 \le f < 2\,000$	$8 - 19\lg(\frac{f}{1600})$
II	$1 \le f < 10$	19,0
	$10 \le f < 40$	$24 - 5\lg(f)$
	$40 \le f < 130$	16,0
	$130 \le f < 1\,000$	$35 - 9\lg(f)$
	$1\,000 \le f < 1600$	8,0
	$1\,600 \le f < 2\,000$	$8 - 19\lg(\frac{f}{1600})$

Documents
Document Sharing Hub
© Standards Australia Limited 2022

Full document details: AS 11801.1-2019 (2022)

Table 4 – Informative return loss values for a channel at key frequencies

Minimum return loss dB									
Frequency MHz	**Class**								
	C	**D**	**E**	**E_A**	**F**	**F_A**	**BCT-B**	**I**	**II**
1	15,0	17,0	19,0	19,0	19,0	19,0	19,0	19,0	19,0
16	15,0	17,0	18,0	18,0	18,0	18,0	18,0	18,0	18,0
100	–	10,0	12,0	12,0	12,0	12,0	14,0	16,0	16,0
250	–	–	8,0	8,0	8,0	8,0	11,0	13,4	13,4
500	–	–	–	6,0	8,0	8,0	10,2	10,7	10,7
600	–	–	–	–	8,0	8,0	10,0	10,0	10,0
1 000	–	–	–	–	–	6,0	8,0	8,0	8,0
1 600	–	–	–	–	–	–	–	8,0	8,0
2 000	–	–	–	–	–	–	–	6,2	6,2

6.3.3.2 Insertion loss/attenuation

The term “attenuation” is still widely used in the cable industry; however, this characteristic is better described as “insertion loss”. In this document, the term “insertion loss” is adopted throughout to describe the signal attenuation over the length of channels, links and components. Unlike attenuation, insertion loss does not scale linearly with length.

The term “attenuation” is maintained for the following parameters:

a) attenuation to crosstalk ratio at the near end (*ACR-N*) – see 6.3.3.4,

b) attenuation to crosstalk ratio at the far end (*ACR-F*) – see 6.3.3.5,

c) unbalance attenuation and coupling attenuation – see 6.3.3.12,

d) power sum alien attenuation to crosstalk ratio at the far end (*PS AACR-F*) – see 6.3.3.13.4.

For the calculation of *ACR-N, PS ACR-N, ACR-F, PS ACR-F* and *PS AACR-F,* the corresponding value for insertion loss (*IL*) shall be used.

The insertion loss requirements are applicable to all cabling Classes.

The insertion loss (*IL*) of each pair of a channel shall meet the requirements in Table 5.

The *IL* of each pair of a channel, at maximum implementation, at key frequencies is given in Table 6 for information only.

© Standards Australia Limited 2022

Full document details: AS 11801.1-2019 (2022)

Table 5 – Insertion loss for a channel

Class	Frequency MHz	Maximum insertion loss dB
A	$f = 0{,}1$	16,0 [a]
B	$f = 0{,}1$	5,5 [a]
	$f = 1$	5,8 [a]
C	$1 \le f \le 16$	$1{,}05 \times \left(3{,}23\sqrt{f}\right) + 4 \times 0{,}2$ [a]
D	$1 \le f \le 100$	$1{,}05 \times \left(1{,}910\,8\sqrt{f} + 0{,}022\,2 \times f + 0{,}2/\sqrt{f}\right) + 4 \times 0{,}04 \times \sqrt{f}$ [a]
E	$1 \le f \le 250$	$1{,}05 \times \left(1{,}82\sqrt{f} + 0{,}016\,9 \times f + 0{,}25/\sqrt{f}\right) + 4 \times 0{,}02 \times \sqrt{f}$ [a]
E_A	$1 \le f \le 500$	$1{,}05 \times \left(1{,}82\sqrt{f} + 0{,}009\,1 \times f + 0{,}25/\sqrt{f}\right) + 4 \times 0{,}02 \times \sqrt{f}$ [a]
F	$1 \le f \le 600$	$1{,}05 \times \left(1{,}8\sqrt{f} + 0{,}01 \times f + 0{,}2/\sqrt{f}\right) + 4 \times 0{,}02 \times \sqrt{f}$ [a]
F_A	$1 \le f \le 1\,000$	$1{,}05 \times \left(1{,}8\sqrt{f} + 0{,}005 \times f + 0{,}25/\sqrt{f}\right) + 4 \times 0{,}02 \times \sqrt{f}$ [a]
BCT-B-L	$1 \le f \le 1\,000$	$0{,}138 \times \left(1{,}8\sqrt{f} + 0{,}005 \times f + 0{,}25/\sqrt{f}\right) + 2 \times 0{,}02 \times \sqrt{f}$ [b]
BCT-B-M	$1 \le f \le 1\,000$	$0{,}27 \times \left(1{,}8\sqrt{f} + 0{,}005 \times f + 0{,}25/\sqrt{f}\right) + 2 \times 0{,}02 \times \sqrt{f}$ [b]
I	$1 < f \le 500$	$\left(0{,}634\sqrt{f} + 0{,}00156 \times f + \frac{0{,}078}{\sqrt{f}}\right)$ [d]
	$500 < f \le 2\,000$	$\left(0{,}60698\sqrt{f} + 0{,}00277 \times f + \frac{0{,}078}{\sqrt{f}}\right)$ [e]
II	$1 < f \le 2\,000$	$0{,}32 \times \left(1{,}8\sqrt{f} + 0{,}005 \times f + 0{,}25/\sqrt{f}\right) + 2 \times 0{,}02 \times \sqrt{f}$ [c]

[a] Insertion loss (*IL*) at frequencies that correspond to calculated values of less than 4,0 dB shall revert to a maximum requirement of 4,0 dB.

[b] Insertion loss (*IL*) at frequencies that correspond to calculated values of less than 2,0 dB shall revert to a maximum requirement of 2,0 dB.

[c] Insertion loss (*IL*) at frequencies that correspond to calculated values of less than 3,0 dB shall revert to a maximum requirement of 3,0 dB.

[d] This formula is derived using $0{,}312 \times \left(1{,}8\sqrt{f} + 0{,}005 \times f + \frac{0{,}25}{\sqrt{f}}\right) + 2 \times \left(0{,}02 \times \sqrt{f}\right) + 0{,}0324 \times \sqrt{f}$

[e] This formula is derived using

$$0{,}312 \times \left(1{,}8\sqrt{f} + 0{,}005 \times f + \frac{0{,}25}{\sqrt{f}}\right) + 2 \times \left(0{,}00649 \times \sqrt{f} + 0{,}000605 \times f\right) + 0{,}0324 \times \sqrt{f}$$

AVA Documents
Document Sharing Hub
© Standards Australia Limited 2022

Full document details: AS 11801.1-2019 (2022)

Table 6 – Informative insertion loss values for a channel at key frequencies

Maximum insertion loss dB												
Frequency MHz	**Class**											
	A	**B**	**C**	**D**	**E**	**E_A**	**F**	**F_A**	**BCT-B-L**[a]	**BCT-B-M**[a]	**I**[a]	**II**[a]
0,1	16,0	5,5	–	–	–	–	–	–	–	–	–	–
1	–	5,8	4,2	4,0	4,0	4,0	4,0	4,0	2,0	2,0	3,0	3,0
16	–	–	14,4	9,1	8,3	8,2	8,1	8,0	2,0	2,1	3,0	3,0
100	–	–	–	24,0	21,7	20,9	20,8	20,3	3,0	5,4	6,5	6,3
250	–	–	–	–	35,9	33,9	33,8	32,5	4,7	8,6	10,4	10,1
500	–	–	–	–	–	49,3	49,3	46,7	6,8	12,4	15,0	14,6
600	–	–	–	–	–	–	54,6	51,4	7,5	13,7	16,5	16,1
1 000	–	–	–	–	–	–	–	67,6	9,8	18,0	22,0	21,1
1 600	–	–	–	–	–	–	–	–	–	–	28,7	27,2
2 000	–	–	–	–	–	–	–	–	–	–	32,7	30,8
[a] Values reflect reduced channel lengths as compared to those of other Classes.												

6.3.3.3 NEXT

6.3.3.3.1 Pair-to-pair NEXT

The *NEXT* requirements are applicable to all cabling Classes.

The *NEXT* between each pair combination of a channel shall meet the requirements in Table 7.

The *NEXT* of each pair of a channel, at maximum implementation, at key frequencies is given in Table 8 for information only.

The *NEXT* requirements shall be met at both ends of the cabling. *NEXT* values at frequencies where the insertion loss (*IL*) is below 4,0 dB are for information only.

© Standards Australia Limited 2022

Full document details: AS 11801.1-2019 (2022)

Table 7 – NEXT for a channel

Class	Frequency MHz	Minimum NEXT [a] dB
A	$f = 0{,}1$	27,0
B	$0{,}1 \le f \le 1$	$25 - 15\lg(f)$
C	$1 \le f \le 16$	$39{,}1 - 16{,}4\lg(f)$
D	$1 \le f \le 100$	$-20\lg\left(10^{\frac{65{,}3-15\lg(f)}{-20}} + 2\times 10^{\frac{83-20\lg(f)}{-20}}\right)$
E	$1 \le f \le 250$	$-20\lg\left(10^{\frac{74{,}3-15\lg(f)}{-20}} + 2\times 10^{\frac{94-20\lg(f)}{-20}}\right)$
E_A	$1 \le f \le 500$	$-20\lg\left(10^{\frac{74{,}3-15\lg(f)}{-20}} + 2\times 10^{\frac{94-20\lg(f)}{-20}}\right)$ [b, d]
F	$1 \le f \le 600$	$-20\lg\left(10^{\frac{102{,}4-15\lg(f)}{-20}} + 2\times 10^{\frac{102{,}4-15\lg(f)}{-20}}\right)$
F_A	$1 \le f \le 1\,000$	$-20\lg\left(10^{\frac{105{,}4-15\lg(f)}{-20}} + 2\times 10^{\frac{116{,}3-20\lg(f)}{-20}}\right)$ [c, d]
BCT-B	$1 \le f \le 1\,000$	$-20\lg\left(10^{\frac{105{,}4-15\lg(f)}{-20}} + 2\times 10^{\frac{116{,}3-20\lg(f)}{-20}}\right)$ [c, d]
I	$1 \le f \le 500$	$-20\lg\left(10^{\frac{75{,}3-15\lg(f)}{-20}} + 2\times 10^{\frac{94-20\lg(f)}{-20}}\right)$
	$500 < f \le 2\,000$	$-20\lg\left(10^{\frac{75{,}3-15\lg(f)}{-20}} + 2\times 10^{\frac{40-38\lg(f/500)}{-20}}\right)$
II	$1 \le f \le 1000$	$-20\lg\left(10^{\frac{105{,}4-15\lg(f)}{-20}} + 2\times 10^{\frac{116{,}3-20\lg(f)}{-20}}\right)$
	$1000 < f \le 1600$	$-20\lg\left(10^{\frac{105{,}4-15\lg(f)}{-20}} + 2\times 10^{\frac{56{,}3-90\lg(f/1000)}{-20}}\right)$
	$1600 < f \le 2\,000$	$-20\lg\left(10^{\frac{105{,}4-15\lg(f)}{-20}} + 2\times 10^{\frac{37{,}93-40\lg(f/1600)}{-20}}\right)$

[a] *NEXT* at frequencies that correspond to calculated values of greater than 65,0 dB shall revert to a minimum requirement of 65,0 dB.

[b] Whenever the Class E_A channel insertion loss at 450 MHz is less than 12 dB, subtract the term $1{,}4((f - 450)/50)$ from the formula stated above for the range of 450 MHz to 500 MHz.

[c] Whenever the Class F_A channel insertion loss at 900 MHz is less than 17 dB, subtract the term $2{,}8((f - 900)/100)$ from the formula stated above for the range of 900 MHz to 1 000 MHz.

[d] The terms in the formulas are not intended to imply component performance.

Documents
Document Sharing Hub
© Standards Australia Limited 2022

Full document details: AS 11801.1-2019 (2022)

Table 8 – Informative NEXT values for a channel at key frequencies

Minimum channel NEXT dB											
Frequency MHz	**Class**										
	A	**B**	**C**	**D**	**E**	**E_A**	**F**	**F_A**	**BCT-B**	**I**	**II**
0,1	27,0	40,0	–	–	–	–	–	–	–	–	–
1	–	25,0	39,1	63,3	65,0	65,0	65,0	65,0	65,0	65,0	65,0
16	–	–	19,4	43,6	53,2	53,2	65,0	65,0	65,0	53,9	65,0
100	–	–	–	30,1	39,9	39,9	62,9	65,0	65,0	40,5	65,0
250	–	–	–	–	33,1	33,1	56,9	59,1	59,1	33,6	59,1
500	–	–	–	–	–	27,9	52,4	53,6	53,6	28,4	53,6
600	–	–	–	–	–	–	51,2	52,1	52,1	26,2	52,1
1 000	–	–	–	–	–	–	–	47,9	47,9	19,6	47,9
1 600	–	–	–	–	–	–	–	–	–	12,9	31,5
2 000	–	–	–	–	–	–	–	–	–	9,6	27,7

6.3.3.3.2 Power sum NEXT

The *PS NEXT* requirements are only applicable to Classes D through F_A, BCT-B, I, and II.

The *PS NEXT* of each pair of a channel shall meet the requirements in Table 9.

The *PS NEXT* of each pair of a channel, at maximum implementation, at key frequencies is given in Table 10 for information only.

The *PS NEXT* requirements shall be met at both ends of the cabling. *PS NEXT* values at frequencies where the insertion loss (*IL*) is below 4,0 dB are for information only.

$PS\ NEXT_k$ of pair k is computed as follows:

$$PSNEXT_k = -10 \lg \sum_{i=1, i \neq k}^{n} 10^{\frac{-NEXT_{ik}}{10}} \qquad (1)$$

where

i is the number of the disturbing pair;

k is the number of the disturbed pair;

n is the total number of pairs;

$NEXT_{ik}$ is the near-end crosstalk loss coupled from pair i into pair k.

© Standards Australia Limited 2022

Full document details: AS 11801.1-2019 (2022)

Table 9 – PS NEXT for a channel

Class	Frequency MHz	Minimum PS NEXT[a] dB
D	$1 \le f \le 100$	$-20\lg\left(10^{\frac{62,3-15\lg(f)}{-20}}+2\times10^{\frac{80-20\lg(f)}{-20}}\right)$
E	$1 \le f \le 250$	$-20\lg\left(10^{\frac{72,3-15\lg(f)}{-20}}+2\times10^{\frac{90-20\lg(f)}{-20}}\right)$
E_A	$1 \le f \le 500$	$-20\lg\left(10^{\frac{72,3-15\lg(f)}{-20}}+2\times10^{\frac{90-20\lg(f)}{-20}}\right)$ [b, d]
F	$1 \le f \le 600$	$-20\lg\left(10^{\frac{99,4-15\lg(f)}{-20}}+2\times10^{\frac{99,4-15\lg(f)}{-20}}\right)$
F_A	$1 \le f \le 1\,000$	$-20\lg\left(10^{\frac{102,4-15\lg(f)}{-20}}+2\times10^{\frac{113,3-20\lg(f)}{-20}}\right)$ [c, d]
BCT-B	$1 \le f \le 1\,000$	$-20\lg\left(10^{\frac{102,4-15\lg(f)}{-20}}+2\times10^{\frac{113,3-20\lg(f)}{-20}}\right)$ [c, d]
I	$1 \le f \le 500$	$-20\lg\left(10^{\frac{72,3-15\lg(f)}{-20}}+2\times10^{\frac{91-20\lg(f)}{-20}}\right)$
	$500 < f \le 2\,000$	$-20\lg\left(10^{\frac{72,3-15\lg(f)}{-20}}+2\times10^{\frac{37-38\lg(f/500)}{-20}}\right)$
II	$1 \le f \le 1000$	$-20\lg\left(10^{\frac{102,4-15\lg(f)}{-20}}+2\times10^{\frac{113,3-20\lg(f)}{-20}}\right)$
	$1000 < f \le 1600$	$-20\lg\left(10^{\frac{102,4-15\lg(f)}{-20}}+2\times10^{\frac{53,3-90\lg(f/1000)}{-20}}\right)$
	$1600 < f \le 2\,000$	$-20\lg\left(10^{\frac{102,4-15\lg(f)}{-20}}+2\times10^{\frac{34,93-40\lg(f/1600)}{-20}}\right)$

[a] *PS NEXT* at frequencies that correspond to calculated values of greater than 62,0 dB shall revert to a minimum requirement of 62,0 dB.

[b] Whenever the Class E_A channel insertion loss at 450 MHz is less than 12 dB, subtract the term $1,4((f-450)/50)$ from the formula stated above for the range of 450 MHz to 500 MHz.

[c] Whenever the Class F_A channel insertion loss at 900 MHz is less than 17 dB, subtract the term $2,8((f-900)/100)$ from the formula stated above for the range of 900 MHz to 1 000 MHz.

[d] The terms in the formulas are not intended to imply component performance.

Documents
Document Sharing Hub
© Standards Australia Limited 2022

Full document details: AS 11801.1-2019 (2022)

Table 10 – Informative PS NEXT values for a channel at key frequencies

Minimum PS NEXT dB								
Frequency MHz	**Class**							
	D	**E**	**E_A**	**F**	**F_A**	**BCT-B**	**I**	**II**
1	60,3	62,0	62,0	62,0	62,0	62,0	62,0	62,0
16	40,6	50,6	50,6	62,0	62,0	62,0	50,9	62,0
100	27,1	37,1	37,1	59,9	62,0	62,0	37,5	62,0
250	–	30,2	30,2	53,9	56,1	56,1	30,6	56,1
500	–	–	24,8	49,4	50,6	50,6	25,4	50,6
600	–	–	–	48,2	49,1	49,1	23,2	49,1
1 000	–	–	–	–	44,9	44,9	16,6	44,9
1 600	–	–	–	–	–	–	9,9	28,5
2 000	–	–	–	–	–	–	6,6	24,7

6.3.3.4 Attenuation to crosstalk ratio at the near-end

6.3.3.4.1 General

ACR-N and *PS ACR-N* requirements are only applicable to Classes D through F_A, BCT-B, I, and II.

Except for the name, the definition and formulas for *ACR-N* and *PS ACR-N* are identical to those used for *ACR* and *PS ACR,* respectively, in prior editions of the ISO/IEC 11801 series documents.

6.3.3.4.2 Pair-to-pair ACR-N

Pair-to-pair *ACR-N* is the difference between the pair-to-pair *NEXT* and the insertion loss (*IL*) of the disturbed pair in decibels.

The *ACR-N* of each pair combination of a channel shall meet the difference of the *NEXT* requirement of Table 7 and the insertion loss (*IL*) requirement of Table 5 of the respective class.

The *ACR-N* of each pair of a channel, at maximum implementation, at key frequencies is given in Table 11 for information only.

The *ACR-N* requirements shall be met at both ends of the cabling.

$ACR\text{-}N_{ik}$ of pairs i and k is computed as follows:

$$ACR\text{-}N_{ik} = NEXT_{ik} - IL_k \tag{2}$$

where

i is the number of the disturbing pair;

k is the number of the disturbed pair;

$NEXT_{ik}$ is the near-end crosstalk loss coupled from pair i into pair k;

IL_k is the insertion loss of pair k.

© Standards Australia Limited 2022

Full document details: AS 11801.1-2019 (2022)