AS ISO/IEC 14443.3:2022
ISO/IEC 14443-3:2018
ISO/IEC 14443-3:2018/Amd 1:2021
ISO/IEC 14443-3:2018/Amd 2:2020

Australian STANDARD®

STANDARDS Australia

Cards and security devices for personal identification — Contactless proximity objects

Part 3: Initialization and anticollision

Documents
Document Sharing Hub

AS ISO/IEC 14443.3:2022

This Australian Standard ® was prepared by IT-017, Cards and security devices for personal identification. It was approved on behalf of the Council of Standards Australia on 7 June 2022.

This Standard was published on 24 June 2022.

The following are represented on Committee IT-017:

Australia Post
Australian Hotels Association
Australian Industry Group
Australian Passport Office
Australian Security Industry Association
Department of Home Affairs — Identity and Biometrics Division
Department of Transport and Main Roads, QLD

This Standard was issued in draft form for comment as DR AS ISO/IEC 14443.3:2022.

Keeping Standards up-to-date

Ensure you have the latest versions of our publications and keep up-to-date about Amendments, Rulings, Withdrawals, and new projects by visiting:
www.standards.org.au

ISBN 978 1 76113 856 0

Documents
Document Sharing Hub

Full document details: AS ISO IEC 14443.3-2022

AS ISO/IEC 14443.3:2022
ISO/IEC 14443-3:2018
ISO/IEC 14443-3:2018/Amd 1:2021
ISO/IEC 14443-3:2018/Amd 2:2020

Cards and security devices for personal identification — Contactless proximity objects

Part 3: Initialization and anticollision

Originated as AS 14443.3—2003.
Second edition 2022.

COPYRIGHT

© ISO/IEC 2022 — All rights reserved
© Standards Australia Limited 2022

All rights are reserved. No part of this work may be reproduced or copied in any form or by any means, electronic or mechanical, including photocopying, without the written permission of the publisher, unless otherwise permitted under the Copyright Act 1968 (Cth).

Documents
Document Sharing Hub

Full document details: AS ISO IEC 14443.3-2022

Preface

This Standard was prepared by the Standards Australia Committee IT-017, Cards and security devices for personal identification, to supersede AS 14443.3:2003, *Identification cards — Contactless integrated circuit(s) cards — Proximity cards, Part 3: Initialization and anticollision.*

The objective of this document is to describe the following:

(a) Polling for proximity cards or objects (PICCs) entering the field of a proximity coupling device (PCD).

(b) The byte format, the frames and timing used during the initial phase of communication between PCDs and PICCs.

(c) The initial Request and Answer to Request command content.

(d) Methods to detect and communicate with one PICC among several PICCs (anticollision).

(e) Other parameters required to initialize communications between a PICC and PCD.

(f) Optional means to ease and speed up the selection of one PICC among several PICCs based on application criteria.

(g) Optional capability to allow a device to alternate between the functions of a PICC and a PCD to communicate with a PCD or a PICC, respectively. A device which implements this capability is called a PXD.

Protocol and commands used by higher layers and by applications and which are used after the initial phase are described in AS ISO/IEC 14443.4:2022.

This document is applicable to PICCs of Type A and of Type B (as described in AS ISO/IEC 14443.2:2022), to PCDs (as described in AS ISO/IEC 14443.2:2022) and to PXDs.

This document is identical with, and has been reproduced from, ISO/IEC 14443-3:2018, *Cards and security devices for personal identification — Contactless proximity objects — Part 3: Initialization and anticollision* and its Amendment No. 1 (2021) and Amendment No. 2 (2020) which have been added at the end of the source text.

As this document has been reproduced from an International document, a full point substitutes for a comma when referring to a decimal marker.

Australian or Australian/New Zealand Standards that are identical adoptions of international normative references may be used interchangeably. Refer to the online catalogue for information on specific Standards.

The terms “normative” and “informative” are used in Standards to define the application of the appendices or annexes to which they apply. A “normative” appendix or annex is an integral part of a Standard, whereas an “informative” appendix or annex is only for information and guidance.

Documents
Document Sharing Hub

© Standards Australia Limited 2022

Full document details: AS ISO IEC 14443.3-2022

Contents

Preface ii
Foreword v
Introduction vi
1 Scope 1
2 Normative references 1
3 Terms and definitions 2
4 Symbols, abbreviated terms and notations 3
4.1 Symbols and abbreviated terms 3
4.2 Notations 5
5 General requirements 5
5.1 Alternating PICC and PCD support (PXD) 5
5.2 Alternating between Type A and Type B commands 5
5.2.1 Polling 5
5.2.2 Influence of Type A commands on PICC Type B operation 6
5.2.3 Influence of Type B commands on PICC Type A operation 6
5.2.4 Transition to POWER-OFF state 7
5.3 RFU handling 7
6 Type A — Initialization and anticollision 7
6.1 etu 7
6.2 Frame format and timing 7
6.2.1 Frame delay time 8
6.2.2 Request Guard Time 9
6.2.3 Frame formats 10
6.2.4 CRC_A 12
6.3 PICC states 12
6.3.1 POWER-OFF state 13
6.3.2 IDLE state 14
6.3.3 READY state 14
6.3.4 ACTIVE state 14
6.3.5 HALT state 14
6.3.6 READY* state 14
6.3.7 ACTIVE* state 15
6.3.8 PROTOCOL state 15
6.4 Command set 15
6.4.1 REQA and WUPA commands 15
6.4.2 ANTICOLLISION and SELECT commands 16
6.4.3 HLTA command 16
6.5 Select sequence 16
6.5.1 Select sequence flowchart 17
6.5.2 ATQA — Answer to Request 17
6.5.3 Anticollision and Select 18
6.5.4 UID contents and cascade levels 21
7 Type B — Initialization and anticollision 23
7.1 Character, frame format and timing 23
7.1.1 Character transmission format 23
7.1.2 Character separation 23
7.1.3 Frame format 24
7.1.4 SOF 24
7.1.5 EOF 25
7.1.6 Timing before the PICC SOF 26
7.1.7 Timing before the PCD SOF 27

Documents
Document Sharing Hub
Full document details: AS ISO IEC 14443.3-2022

7.2 CRC_B ... 27
7.3 Anticollision sequence ... 27
7.4 PICC states description ... 28
7.4.1 Initialization and anticollision flowchart ... 30
7.4.2 General statement for state description and transitions ... 30
7.4.3 POWER-OFF state ... 31
7.4.4 IDLE state ... 31
7.4.5 READY-REQUESTED sub-state ... 31
7.4.6 READY-DECLARED sub-state ... 31
7.4.7 PROTOCOL state ... 32
7.4.8 HALT state ... 32
7.5 Command set ... 32
7.6 Anticollision response rules ... 32
7.6.1 PICC with initialization only ... 33
7.7 REQB/WUPB command ... 33
7.7.1 REQB/WUPB command format ... 33
7.7.2 Coding of anticollision prefix byte APf ... 33
7.7.3 Coding of AFI ... 33
7.7.4 Coding of PARAM ... 34
7.8 Slot-MARKER command ... 35
7.8.1 Slot-MARKER command format ... 35
7.8.2 Coding of anticollision prefix byte APn ... 35
7.9 ATQB Response ... 36
7.9.1 ATQB response format ... 36
7.9.2 Pseudo-Unique PICC Identifier (PUPI) ... 36
7.9.3 Application data ... 36
7.9.4 Protocol Info ... 37
7.10 ATTRIB command ... 39
7.10.1 ATTRIB command format ... 40
7.10.2 Identifier ... 40
7.10.3 Coding of Param 1 ... 40
7.10.4 Coding of Param 2 ... 41
7.10.5 Coding of Param 3 ... 42
7.10.6 Coding of Param 4 ... 42
7.10.7 Higher layer INF ... 42
7.11 Answer to ATTRIB command ... 43
7.12 HLTB command and Answer ... 43

8 Electromagnetic disturbance handling ... 44
8.1 General ... 44
8.2 EMD timing constraints ... 44
8.3 Recommendations for a PCD algorithm for EMD handling ... 45

Annex A (informative) **Communication example Type A ... 47**

Annex B (informative) **CRC_A and CRC_B encoding ... 50**

Annex C (informative) **Type A timeslot — Initialization and anticollision ... 53**

Bibliography ... 57

Amendment 1 ... 58

Amendment 2 ... 60

Documents
Document Sharing Hub

Full document details: AS ISO IEC 14443.3-2022

Foreword

ISO (the International Organization for Standardization) and IEC (the International Electrotechnical Commission) form the specialized system for worldwide standardization. National bodies that are members of ISO or IEC participate in the development of International Standards through technical committees established by the respective organization to deal with particular fields of technical activity. ISO and IEC technical committees collaborate in fields of mutual interest. Other international organizations, governmental and non-governmental, in liaison with ISO and IEC, also take part in the work. In the field of information technology, ISO and IEC have established a joint technical committee, ISO/IEC JTC 1.

The procedures used to develop this document and those intended for its further maintenance are described in the ISO/IEC Directives, Part 1. In particular the different approval criteria needed for the different types of document should be noted. This document was drafted in accordance with the editorial rules of the ISO/IEC Directives, Part 2 (see www.iso.org/directives).

Attention is drawn to the possibility that some of the elements of this document may be the subject of patent rights. ISO and IEC shall not be held responsible for identifying any or all such patent rights. Details of any patent rights identified during the development of the document will be in the Introduction and/or on the ISO list of patent declarations received (see www.iso.org/patents).

Any trade name used in this document is information given for the convenience of users and does not constitute an endorsement.

For an explanation on the voluntary nature of standards, the meaning of ISO specific terms and expressions related to conformity assessment, as well as information about ISO's adherence to the World Trade Organization (WTO) principles in the Technical Barriers to Trade (TBT) see the following URL: www.iso.org/iso/foreword.html.

This document was prepared by ISO/IEC JTC 1, *Information technology*, Subcommittee SC 17, *Cards and security devices for personal identification*.

This fourth edition cancels and replaces the third edition (ISO/IEC 14443-3:2016), which has been technically revised.

The following are the main changes since the last edition:

— RFU handling rules and clarifications have been added;

— Annexes D and E have been removed.

A list of all the parts in the ISO/IEC 14443 series can be found on the ISO website.

© Standards Australia Limited 2022

Documents Document Sharing Hub

Full document details: AS ISO IEC 14443.3-2022

Introduction

The ISO/IEC 14443 series of standards describes the parameters for identification cards or objects for international interchange.

This document describes polling for proximity cards entering the field of a proximity coupling device, the byte format and framing, the initial Request and Answer to Request command content, methods to detect and communicate with one proximity card among several proximity cards (anticollision) and other parameters required to initialize communications between a proximity card and a proximity coupling device. Protocols and commands used by higher layers and by applications and which are used after the initial phase are described in ISO/IEC 14443-4.

The ISO/IEC 14443 series of standards is intended to allow operation of proximity cards in the presence of other contactless cards or objects conforming to the ISO/IEC 10536 series of standards and the ISO/IEC 15693 series of standards and near field communication (NFC) devices conforming to ISO/IEC 18092 and ISO/IEC 21481.

© Standards Australia Limited 2022

Documents
Document Sharing Hub

Full document details: AS ISO IEC 14443.3-2022

Australian Standard®

Cards and security devices for personal identification — Contactless proximity objects

Part 3: Initialization and anticollision

1 Scope

This document describes the following:

— polling for proximity cards or objects (PICCs) entering the field of a proximity coupling device (PCD);

— the byte format, the frames and timing used during the initial phase of communication between PCDs and PICCs;

— the initial Request and Answer to Request command content;

— methods to detect and communicate with one PICC among several PICCs (anticollision);

— other parameters required to initialize communications between a PICC and PCD;

— optional means to ease and speed up the selection of one PICC among several PICCs based on application criteria;

— optional capability to allow a device to alternate between the functions of a PICC and a PCD to communicate with a PCD or a PICC, respectively. A device which implements this capability is called a PXD.

Protocol and commands used by higher layers and by applications and which are used after the initial phase are described in ISO/IEC 14443-4.

This document is applicable to PICCs of Type A and of Type B (as described in ISO/IEC 14443-2), to PCDs (as described in ISO/IEC 14443-2) and to PXDs.

NOTE 1 Part of the timing of data communication is defined in ISO/IEC 14443-2.

NOTE 2 Test methods for this document are defined in ISO/IEC 10373-6.

2 Normative references

The following documents are referred to in the text in such a way that some or all of their content constitutes requirements of this document. For dated references, only the edition cited applies. For undated references, the latest edition of the referenced document (including any amendments) applies.

ISO/IEC 7816-4, *Identification cards — Integrated circuit cards — Part 4: Organization, security and commands for interchange*

ISO/IEC 7816-6, *Identification cards — Integrated circuit cards — Part 6: Interindustry data elements for interchange*

ISO/IEC 13239, *Information technology — Telecommunications and information exchange between systems — High-level data link control (HDLC) procedures*

ISO/IEC 14443-2, *Cards and security devices for personal identification — Contactless proximity objects —Part 2: Radio frequency power and signal interface*

ISO/IEC 14443-4, *Cards and security devices for personal identification — Contactless proximity objects —Part 4: Transmission protocol*

Documents
Document Sharing Hub
© Standards Australia Limited 2022

Full document details: AS ISO IEC 14443.3-2022

3 Terms and definitions

For the purposes of this document, the terms and definitions given in ISO/IEC 14443-2 and the following apply.

ISO and IEC maintain terminological databases for use in standardization at the following addresses:

— IEC Electropedia: available at http://www.electropedia.org/

— ISO Online browsing platform: available at https://www.iso.org/obp

3.1
anticollision loop
algorithm used to prepare for dialogue between PCD and one or more PICCs out of the total number of PICCs responding to a request command

3.2
byte
8 bits of data designated b8 to b1, from the most significant bit (MSB, b8) to the least significant bit (LSB, b1)

3.3
collision
transmission by two PICCs in the same PCD energizing field and during the same time period, such that the PCD is unable to distinguish from which PICC the data originated

3.4
frame
sequence of data bits and optional error detection bits, with frame delimiters at start and end

3.5
frame error
error on SOF, start and stop bits, parity bits, EOF

3.6
higher layer protocol
protocol layer (not described in this document) that makes use of the protocol layer defined in this document to transfer information belonging to the application or higher layers of protocol that is not described in this document

3.7
PCD Mode
mode in which a PXD operates as a PCD

3.8
PICC Mode
mode in which a PXD operates as a PICC

3.9
request command
command requesting PICCs of the appropriate type to respond if they are available for initialization

3.10
transmission error
frame error or CRC_A or CRC_B error

© Standards Australia Limited 2022

Documents
Document Sharing Hub

Full document details: AS ISO IEC 14443.3-2022

4 Symbols, abbreviated terms and notations

4.1 Symbols and abbreviated terms

ADC	Application Data Coding, Type B
AFI	Application Family Identifier, card preselection criteria by application, Type B
APf	anticollision prefix f, used in REQB/WUPB, Type B
APn	anticollision prefix n, used in Slot-MARKER command, Type B
ATQA	Answer to Request, Type A
ATQB	Answer to Request, Type B
ATTRIB	PICC selection command, Type B
BCC	Block Check Character (UID CL*n* check byte), Type A
CID	Card Identifier
CL*n*	cascade level *n*, Type A
CT	cascade tag, Type A
CRC_A	Cyclic Redundancy Check error detection code, Type A
CRC_B	Cyclic Redundancy Check error detection code, Type B
D	Divisor
E	end of communication, Type A
EGT	extra guard time, Type B
EOF	end of frame, Type B
etu	elementary time unit
FDT	frame delay time PCD to PICC, Type A
fc	carrier frequency
FO	Frame Option, Type B
fs	subcarrier frequency
FWI	Frame Waiting time Integer
FWT	Frame Waiting Time
HLTA	halt command, Type A
HLTB	halt command, Type B
ID	identification number, Type A
INF	information field belonging to higher layer, Type B
LSB	least significant bit

© Standards Australia Limited 2022

Documents Document Sharing Hub

Full document details: AS ISO IEC 14443.3-2022

MBL	Maximum Buffer Length, Type B
MBLI	Maximum Buffer Length Index, Type B
MSB	most significant bit
N	number of anticollision slots, Type B
n	variable integer value as defined in the specific clause
NAD	node address
NVB	number of valid bits, Type A
P	odd parity bit, Type A
PCD	proximity coupling device
PICC	proximity card or object
PUPI	Pseudo-Unique PICC Identifier, Type B
PXD	proximity extended device
R	slot number chosen by the PICC during the anticollision sequence, Type B
REQA	REQuest command, Type A
REQB	REQuest command, Type B
RFU	reserved for future use
S	start of communication, Type A
SAK	Select acknowledge, Type A
SEL	select code, Type A
SELECT	SELECT command, Type A
SFGI	Start-up Frame Guard time Integer
SFGT	Start-up Frame Guard Time
SOF	Start Of Frame, Type B
t_{cyc}	maximum automatic mode alternation cycle time
t_{diff}	minimum time difference of PICC Mode durations
$t_{E,\ PICC}$	low EMD time, PICC
$t_{E,\ PCD}$	low EMD time, PCD
TR0	guard time as defined in ISO/IEC 14443-2, Type B
TR1	synchronization time as defined in ISO/IEC 14443-2, Type B
TR2	frame delay time PICC to PCD, Type B
UID	unique identifier, Type A

© Standards Australia Limited 2022

Documents
Document Sharing Hub

Full document details: AS ISO IEC 14443.3-2022

UID CL*n*	unique identifier of CL*n*, Type A
uid*n*	byte number *n* of unique identifier, $n \geq 0$
WUPA	Wake-UP command, Type A
WUPB	Wake-UP command, Type B

4.2 Notations

— (xxxxx)b data bit representation

— 'XY' hexadecimal notation, equal to XY to the base 16

5 General requirements

5.1 Alternating PICC and PCD support (PXD)

A proximity extended device (PXD) shall alternately support PICC requirements (PICC Mode) and PCD requirements (PCD Mode).

The alternation between the PICC Mode and the PCD Mode may be either automatic or a Mode (PICC Mode or PCD Mode) may be explicitly selected by the user.

The PICC Mode and the PCD Mode are defined as PICC and PCD in the ISO/IEC 14443 series of standards.

The automatic alternation is defined as follows:

— the PXD shall alternate between the PICC Mode and the PCD Mode with maximum cycle time t_{cyc} = 1 s and shall stay in PICC Mode (ready for receiving REQA/WUPA or REQB/WUPB commands, except for the first 5 ms) longer than in PCD Mode (generating operating field), until a communication to either a PICC, a PCD or another PXD is established;

— the PXD shall randomly set the PICC Mode duration for each cycle to a value chosen from a set of at least two different values differing by at least t_{diff} = 5 ms between each of them;

— in PICC Mode, after reception of a valid REQA/WUPA or REQB/WUPB command, the PXD shall not go in PCD Mode before a POWER-OFF state;

— when leaving the PCD Mode after processing of a PICC (or a PXD in PICC mode), the PXD shall resume its automatic mode alternation with the PICC Mode first.

The PXD may check the presence of external operating field to decide not to enter PCD Mode, i.e. to stay in PICC Mode for a further random PICC Mode duration.

The detection of the removal of a PICC (or PXD in PICC Mode) should be done by a PICC presence check method without switching off the operating field to keep the same UID/PUPI and to avoid PXD entering the PCD Mode.

5.2 Alternating between Type A and Type B commands

5.2.1 Polling

In order to detect PICCs which are in the operating field, the PCD shall send repeated request commands. The PCD shall send REQA (or WUPA) and REQB (or WUPB) in any sequence using an equal or configurable duty cycle when polling Type A and Type B. In addition, the PCD may send other commands as described in Annex C.

© Standards Australia Limited 2022

Documents Document Sharing Hub

Full document details: AS ISO IEC 14443.3-2022

When a PICC is exposed to an unmodulated RF field (see ISO/IEC 14443-2), it shall be able to accept a request within 5 ms.

EXAMPLE 1

When a PICC Type A receives any Type B command, it shall be able to accept a REQA (or WUPA) within 5 ms of unmodulated RF field.

EXAMPLE 2

When a PICC Type B receives any Type A command, it shall be able to accept a REQB (or WUPB) within 5 ms of unmodulated RF field.

EXAMPLE 3

When a PICC Type A is exposed to field activation, it shall be able to accept a REQA (or WUPA) within 5 ms of unmodulated RF field.

EXAMPLE 4

When a PICC Type B is exposed to field activation, it shall be able to accept a REQB (or WUPB) within 5 ms of unmodulated RF field.

EXAMPLE 5

When a PICC supporting Type A and Type B is exposed to field activation, it shall be able to accept a REQA (or WUPA) within 5 ms of unmodulated RF field.

EXAMPLE 6

When a PICC supporting Type A and Type B is exposed to field activation, it shall be able to accept a REQB (or WUPB) within 5 ms of unmodulated RF field.

In order to detect PICCs requiring 5 ms, the PCD should periodically present an unmodulated RF field of at least 5,1 ms duration (prior to both Type A and Type B request commands), but may poll more rapidly because PICCs may react faster.

If the PICC supports Type A and Type B, then it shall be locked in the type of the first processed request command (after Answer to Request of one type, the other type is disabled until the PICC enters POWER-OFF state).

The PCD may need to adapt its polling cycle if it wants to detect such a PICC in the disabled type.

5.2.2 Influence of Type A commands on PICC Type B operation

A PICC Type B shall either go to IDLE state (be able to accept a REQB) or be able to continue a transaction in progress after receiving any Type A frame.

A PICC Type B should have the same behavior after receiving any frame of any other standard using the same carrier frequency.

5.2.3 Influence of Type B commands on PICC Type A operation

A PICC Type A shall either go to IDLE state (be able to accept a REQA) or be able to continue a transaction in progress after receiving any Type B frame. If the PICC Type A is in READY* or ACTIVE* state when receiving any Type B frame, it may also go to HALT state as described in Figure 7.

A PICC Type A should have the same behavior after receiving any frame of any other standard using the same carrier frequency.

© Standards Australia Limited 2022

Documents
Document Sharing Hub

Full document details: AS ISO IEC 14443.3-2022

5.2.4 Transition to POWER-OFF state

The PICC shall be in POWER-OFF state no later than 5 ms after the operating field is switched off.

5.3 RFU handling

For the purposes of this document, the following general rules apply.

— A PICC or PCD sending RFU bits shall set these bits to the value indicated herein or to (0)b if no value is given.

— A PICC or PCD receiving RFU bits shall ignore the value of these bits and shall maintain and not change its function, unless explicitly stated otherwise.

6 Type A — Initialization and anticollision

6.1 etu

The value of the etu for each bit rate is defined in Table 1.

Table 1 — etu

Bit rate		etu	
fc/128	(~ 106 kbit/s)	128/*fc*	(~ 9,4 µs)
fc/64	(~ 212 kbit/s)	64/*fc*	(~ 4,7 µs)
fc/32	(~ 424 kbit/s)	32/*fc*	(~ 2,4 µs)
fc/16	(~ 848 kbit/s)	16/*fc*	(~ 1,2 µs)
fc/8	(~ 1,70 Mbit/s)	8/*fc*	(~ 0,59 µs)
fc/4	(~ 3,39 Mbit/s)	4/*fc*	(~ 0,29 µs)
fc/2	(~ 6,78 Mbit/s)	2/*fc*	(~ 0,15 µs)
3*fc*/4	(~ 10,17 Mbit/s)	4/fc	(~ 0,29 µs)
fc	(~ 13,56 Mbit/s)	4/*fc*	(~ 0,29 µs)
3*fc*/2	(~ 20,34 Mbit/s)	2/*fc*	(~ 0,15 µs)
2*fc*	(~ 27,12 Mbit/s)	2/*fc*	(~ 0,15 µs)

6.2 Frame format and timing

This subclause defines the frame format and timing used during communication initialization and anticollision. For bit representation and coding, refer to ISO/IEC 14443-2.

Frames shall be transferred in pairs, PCD to PICC followed by PICC to PCD, using the following sequence:

— PCD frame:

  — PCD start of communication;

  — information and, where required, error detection bits sent by the PCD;

  — PCD end of communication;

— Frame delay time PCD to PICC;

— PICC frame:

  — PICC start of communication;

  — information and, where required, error detection bits sent by the PICC;

© Standards Australia Limited 2022

Documents Document Sharing Hub

Full document details: AS ISO IEC 14443.3-2022

— PICC end of communication;

— Frame delay time PICC to PCD.

NOTE The frame delay time (FDT) from PCD to PICC overlaps the PCD end of communication.

6.2.1 Frame delay time

The frame delay time is defined as the time between two frames transmitted in opposite directions.

6.2.1.1 Frame delay time PCD to PICC

This is the time between the end of the last pause transmitted by the PCD and the first modulation edge within the start bit transmitted by the PICC and shall respect the timing defined in Figure 1 and Table 2 where *n* is an integer value.

For bit rates of *fc*/8, *fc*/4 and *fc*/2, the FDT starts at the end of the last modulation transmitted by the PCD.

For bit rates of 3*fc*/4, *fc*, 3*fc*/2, and 2*fc*, the FDT starts at the end of the last phase modulation transmitted by the PCD.

Table 2 defines values for *n* and FDT depending on the command type and the logic state of the last transmitted data bit in this command.

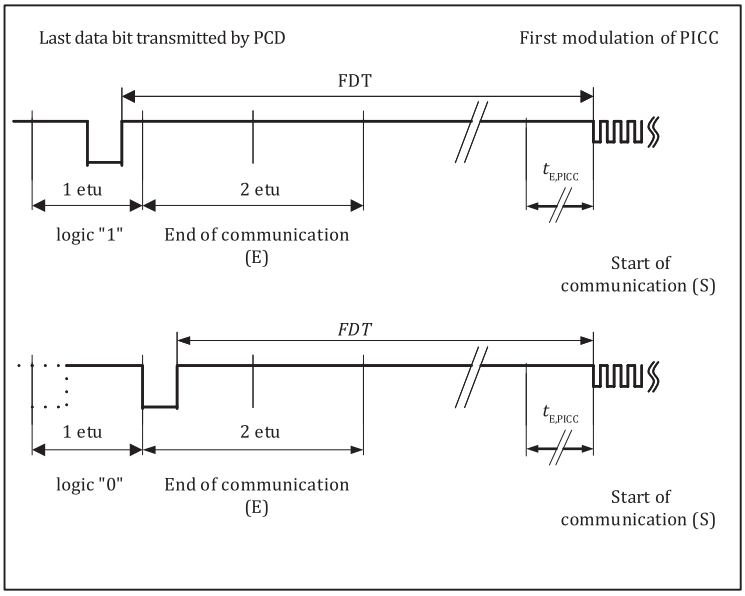

Figure 1 — Frame delay time PCD to PICC for bit rates up to *fc*/16

NOTE $t_{E,\,PICC}$ is specified in Clause 8.

© Standards Australia Limited 2022

Documents
Document Sharing Hub

Full document details: AS ISO IEC 14443.3-2022

Table 2 — Frame delay time PCD to PICC

Command type		*n* (integer value)	FDT	
			last bit = (1)b	last bit = (0)b
REQA command WUPA command ANTICOLLISION command SELECT command		9	(*n* × 128 + 84)/*fc* [= 1 236/*fc*]	(*n* × 128 + 20)/*fc* [= 1 172/*fc*]
All other commands at bit rates				
PCD to PICC	PICC to PCD			
fc/128	*fc*/128	≥9	(*n* × 128 + 84)/*fc*	(*n* × 128 + 20)/*fc*
fc/64		≥8	(*n* × 128 + 148)/*fc*	(*n* × 128 + 116)/*fc*
fc/32		≥8	(*n* × 128 + 116)/*fc*	(*n* × 128 + 100)/*fc*
fc/16		≥8	(*n* × 128 + 100)/*fc*	(*n* × 128 + 92)/*fc*
fc/128 or *fc*/64 or *fc*/32 or *fc*/16 or *fc*/8 or *fc*/4 or *fc*/2 or 3*fc*/4 or *fc* or 3*fc*/2 or 2*fc*	*fc*/64 or *fc*/32 or *fc*/16 or *fc*/8 or *fc*/4 or *fc*/2	Not applicable	≥1 116/*fc*	≥1 116/*fc*
For anticollision, all PICCs in the field shall respond in a synchronous way to the commands: REQA, WUPA, ANTICOLLISION and SELECT.				

If a bit rate higher than *fc*/16 is selected for PCD to PICC communication, then a bit rate of *fc*/128 is not allowed for PICC to PCD communication, see ISO/IEC 14443-4. This restriction is required because the necessary precise FDT is not defined for PCD NRZ-L coding which is used for bit rates higher than *fc*/16.

The FDT measurement starts at the beginning of the rising edge as specified and illustrated with small circles in the following figures of ISO/IEC 14443-2:—[1]:

— Figure titled "PauseA for a bit rate of *fc*/128" for PCD to PICC bit rate of *fc*/128;

— Figure titled "PauseA for bit rates of *fc*/64, *fc*/32, and *fc*/16" for PCD to PICC bit rates of *fc*/64, *fc*/32 and *fc*/16;

— Figure titled "Type B modulation waveform" for PCD to PICC bit rates of *fc*/8, *fc*/4 and *fc*/2.

The measured FDT shall be between the value given in Table 2 and the value given in Table 2 + 0,4 µs.

The PCD should accept a response with a FDT tolerance of −1/*fc* to (+0,4 µs + 1/*fc*).

6.2.1.2 Frame delay time PICC to PCD

This is the time between the last modulation transmitted by the PICC and the first modulation transmitted by the PCD and shall be at least 1 172/*fc*.

To enhance interoperability, an additional waiting time of 100/*fc* should be incorporated in the PCD operation.

6.2.2 Request Guard Time

The Request Guard Time is defined as the minimum time between the start bits of two consecutive REQA or WUPA commands. It has the value 7 000/*fc*.

To enhance interoperability, an additional waiting time of 100/*fc* should be incorporated in the PCD operation.

1) Fourth edition to be published.

© Standards Australia Limited 2022

Documents Document Sharing Hub

Full document details: AS ISO IEC 14443.3-2022

6.2.3 Frame formats

The following frame types are defined:

— short frames;

— standard frames;

— bit oriented anticollision frame;

— PCD standard frames for bit rates of *fc*/8, *fc*/4 and *fc*/2.

6.2.3.1 Short frame

A short frame is used to initiate communication and consists of, in the following order as illustrated in Figure 2:

— start of communication;

— 7 data bits transmitted LSB first (for coding see Table 3);

— end of communication.

No parity bit is added.

	LSB MSB	
S	b1 b2 b3 b4 b5 b6 b7	E

Figure 2 — Short frame

6.2.3.2 Standard frames

6.2.3.2.1 PCD standard frame for bit rates of *fc*/128, *fc*/64, *fc*/32 and *fc*/16 and PICC standard frame

Standard frames are used for data exchange and consist of, in the following order:

— start of communication;

— n × (8 data bits + odd parity bit), with $n \geq 1$. The LSB of each byte is transmitted first. Each byte is followed by an odd parity bit. The parity bit P is set such that the number of 1s is odd in (b1 to b8, P);

— end of communication.

The PCD standard frame for bit rates of *fc*/128, *fc*/64, *fc*/32 and *fc*/16 is illustrated in Figure 3.

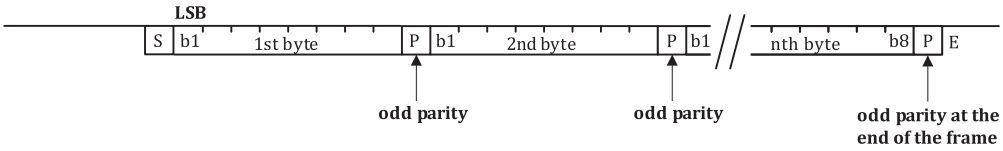

Figure 3 — PCD standard frame for bit rates of *fc*/128, *fc*/64, *fc*/32 and *fc*/16

As an exception, the last parity bit of a PICC standard frame shall be inverted if this frame is transmitted with a bit rate higher than *fc*/128. PICC standard frames are illustrated in Figure 4.

© Standards Australia Limited 2022

Documents
Document Sharing Hub

Full document details: AS ISO IEC 14443.3-2022

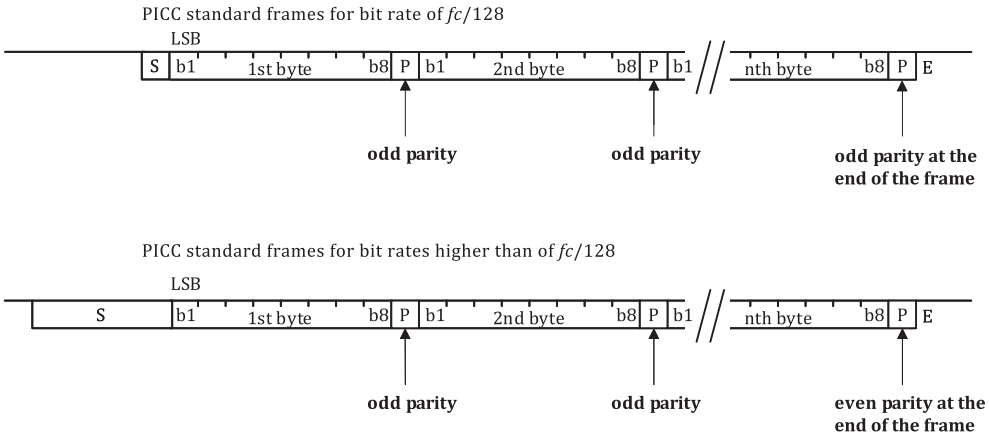

Figure 4 — PICC standard frames for all bit rates

6.2.3.2.2 PCD standard frame for bit rates of *fc*/8, *fc*/4 and *fc*/2

The character transmission format and character separation as defined in 7.1.1 and 7.1.2, respectively, shall be used.

The frame format is defined in 7.1.3.

6.2.3.2.3 PCD standard frame for PCD to PICC bit rates of 3*fc*/4, *fc*, 3*fc*/2 and 2*fc*

The standard frame format as defined in 6.2.3.2.1 shall be used.

Start and end of communication are specified in ISO/IEC 14443-2.

6.2.3.3 Bit oriented anticollision frame

The PCD shall detect a collision that occurs when at least two PICCs simultaneously transmit bit patterns with one or more bit positions in which at least two PICCs transmit complementary values. In this case, the bit patterns merge and the carrier is modulated with the subcarrier for the whole (100%) bit duration (see ISO/IEC 14443-2:—, 8.2.5.1).

Bit oriented anticollision frames shall only be used during bit frame anticollision loops and are standard frames with a length of 7 bytes, split into the following two parts:

— part 1 for transmission from PCD to PICC;

— part 2 for transmission from PICC to PCD.

For the length of part 1 and part 2, the following rules shall apply:

— Rule 1: The sum of data bits shall be 56.

— Rule 2: The minimum length of part 1 shall be 16 data bits.

— Rule 3: The maximum length of part 1 shall be 48 data bits.

Consequently, the minimum length of part 2 shall be 8 data bit and the maximum length shall be 40 data bits.

Since the split can occur at any bit position within a byte, the following two cases are defined:

— case FULL BYTE: Split after a complete byte. A parity bit is added after the last data bit of part 1;

— case SPLIT BYTE: Split within a byte. No parity bit is added after the last data bit of part 1.

© Standards Australia Limited 2022

Documents Document Sharing Hub

Full document details: AS ISO IEC 14443.3-2022

The Block Check Characters (BCC) is calculated as exclusive-or over the four previous bytes.

The following examples for case FULL BYTE and case SPLIT BYTE define the bit organization and order of bit transmission, illustrated in Figure 5 and Figure 6.

NOTE These examples include proper values for NVB and BCC.

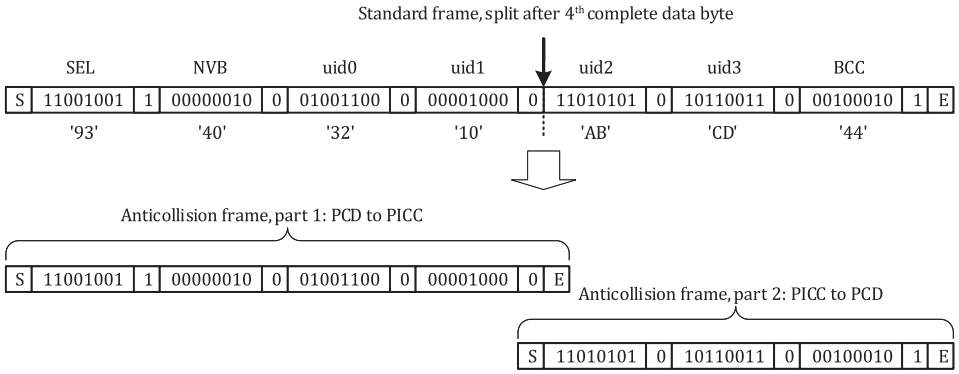

Figure 5 — Bit organization and transmission of bit oriented anticollision frame, case FULL BYTE

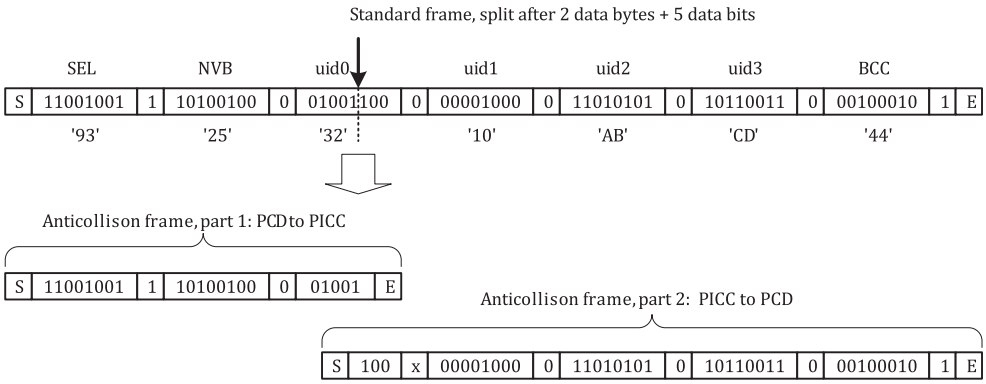

Figure 6 — Bit organization and transmission of bit oriented anticollision frame, case SPLIT BYTE

For a SPLIT BYTE, the PCD shall ignore the first parity bit of part 2.

6.2.4 CRC_A

A frame that includes CRC_A shall only be considered correct if it is received with a valid CRC_A value.

The frame CRC_A is a function of k data bits, which consist of all the data bits in the frame, excluding parity bits, S and E, and the CRC_A itself. Since data is encoded in bytes, the number of bits k is a multiple of 8.

For error checking, the two CRC_A bytes are sent in the standard frame, after the data bytes and before the E. The CRC_A shall be as defined in ISO/IEC 13239 but the initial register content shall be '6363' and the register content shall not be inverted after calculation.

For examples, refer to Annex B.

6.3 PICC states

The following subclauses provide descriptions of the states for a PICC Type A specific to the anticollision sequence.

© Standards Australia Limited 2022

Documents
Document Sharing Hub
Full document details: AS ISO IEC 14443.3-2022

The state diagram in Figure 7 specifies all possible state transitions caused by commands of this part of ISO/IEC 14443. PICCs shall react to valid received frames only. No response shall be sent when transmission errors are detected except for PICCs in ACTIVE or ACTIVE* state.

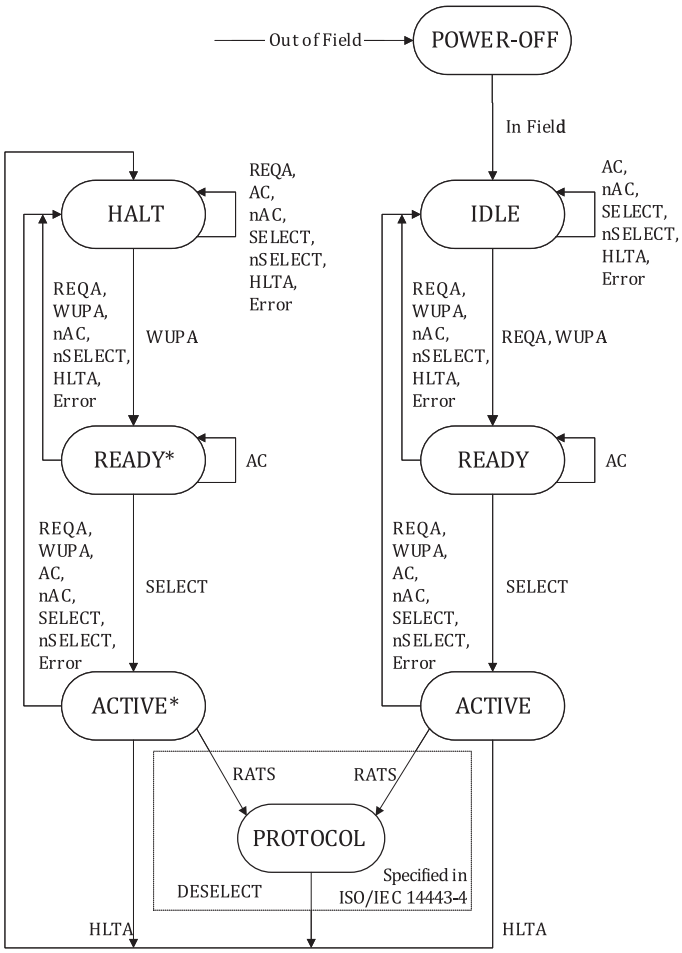

Figure 7 — PICC Type A state diagram

The following symbols apply for the state diagram shown in Figure 7:

AC: ANTICOLLISION command (matched UID)

nAC: ANTICOLLISION command (not matched UID)

SELECT: SELECT command (matched UID)

nSELECT: SELECT command (not matched UID)

RATS: RATS command, defined in ISO/IEC 14443-4

DESELECT: DESELECT command, defined in ISO/IEC 14443-4

Error: transmission error detected or unexpected Type A command

PICCs being compliant with ISO/IEC 14443-3 but not selected with RATS from ISO/IEC 14443-4 may leave ACTIVE or ACTIVE* state by proprietary commands.

6.3.1 POWER-OFF state

Description:

© Standards Australia Limited 2022

Documents Document Sharing Hub

Full document details: AS ISO IEC 14443.3-2022

In POWER-OFF state, the PICC is not powered by a PCD operating field.

State exit conditions and transitions:

If the PICC is in an energizing magnetic field greater than $H_{\min}$ (see ISO/IEC 14443-2), it shall enter its IDLE state within a delay not greater than defined in 6.2.

6.3.2 IDLE state

Description:

In IDLE state, the PICC is powered. It listens for commands and shall recognize REQA and WUPA commands.

State exit conditions and transitions:

The PICC enters READY state after it has received a valid REQA or WUPA command and transmitted its ATQA.

6.3.3 READY state

Description:

In READY state, the bit frame anticollision method shall be applied. Cascade levels are handled inside this state to get the complete UID.

State exit conditions and transitions:

The PICC enters ACTIVE state when it is selected with its complete UID.

6.3.4 ACTIVE state

Description:

If the PICC complies with ISO/IEC 14443-4 then the PICC shall be ready to accept the protocol activation command (RATS) as specified in ISO/IEC 14443-4. Otherwise, it may proceed with non ISO/IEC 14443-4 protocol.

State exit conditions and transitions:

The PICC enters HALT state when a valid HLTA command is received.

NOTE In the higher layer protocol, specific commands can be defined to return the PICC to its HALT state.

6.3.5 HALT state

Description:

In HALT state, the PICC shall respond only to a WUPA command.

State exit conditions and transitions:

The PICC enters READY* state after it has received a valid WUPA command and transmitted its ATQA.

6.3.6 READY* state

Description:

READY* state is similar to READY state. The differences are the transitions specified in Figure 7. The bit frame anticollision method shall be applied. Cascade levels are handled inside this state to get complete UID.

© Standards Australia Limited 2022

Documents
Document Sharing Hub

Full document details: AS ISO IEC 14443.3-2022