AS/NZS IEC 61703:2020
IEC 61703:2016

AS/NZS IEC 61703:2020

Australian/New Zealand Standard™

Mathematical expressions for reliability, availability, maintainability and maintenance support terms

Documents
Document Sharing Hub

Full document details: AS NZS IEC 61703-2020

AS/NZS IEC 61703:2020

This Joint Australian/New Zealand Standard™ was prepared by Joint Technical Committee QR-005, Dependability. It was approved on behalf of the Council of Standards Australia on 22 April 2020 and by the New Zealand Standards Approval Board on 5 February 2020.

This Standard was published on 1 May 2020.

The following are represented on Committee QR-005:

Asset Management Council (Australia)
Australian Industry Group
Department of Defence (Australian Government)
Engineering New Zealand
Engineers Australia
Human Factors and Ergonomics Society of New Zealand
Institution of Occupational Safety and Health
National Rail Safety Regulator (Australia)
National Road Carriers Association (New Zealand)
New Zealand Institute of Safety Management
Professionals Australia
Risk Engineering Society (Australia)
Risk Management Institute of Australasia
RiskNZ
University of New South Wales
University of Western Australia
University of Wollongong

This Standard was issued in draft form for comment as DR AS/NZS IEC 61703:2019.

Keeping Standards up-to-date

Ensure you have the latest versions of our publications and keep up-to-date about Amendments, Rulings, Withdrawals, and new projects by visiting:

www.standards.org.au

www.standards.govt.nz

ISBN 978 1 76072 831 1

Documents
Document Sharing Hub

Full document details: AS NZS IEC 61703-2020

Australian/New Zealand Standard™

Mathematical expressions for reliability, availability, maintainability and maintenance support terms

First published as AS/NZS IEC 61703:2020.

COPYRIGHT

© IEC 2020 — All rights reserved
© Standards Australia Limited/the Crown in right of New Zealand, administered by the New Zealand Standards Executive 2020

All rights are reserved. No part of this work may be reproduced or copied in any form or by any means, electronic or mechanical, including photocopying, without the written permission of the publisher, unless otherwise permitted under the Copyright Act 1968 (Cth) or the Copyright Act 1994 (New Zealand).

Documents
Document Sharing Hub

Full document details: AS NZS IEC 61703-2020

Preface

This Standard was prepared by the Joint Standards Australia/Standards New Zealand Committee QR-005, Dependability.

The objective of this Standard is to provide mathematical expressions for selected reliability, availability, maintainability and maintenance support measures defined in IEC 60050-192:2015. In addition, it introduces some terms not covered in IEC 60050-192:2015. They are related to aspects of the system of item classes (see hereafter).

According to IEC 60050-192:2015, dependability [192-01-22] is the ability of an item to perform as and when required and an item [192-01-01] can be an individual part, component, device, functional unit, equipment, subsystem, or system.

To account for mathematical constraints, this Standard splits the items between the individual items considered as a whole (e.g. individual components) and the systems made of several individual items. It provides general considerations for the mathematical expressions for systems as well as individual items but the individual items which are easier to model are analysed in more detail with regards to their repair aspects.

The following item classes are considered separately:

(a) Systems;

(b) Individual items —

  (i) non-repairable [192-01-12];

  (ii) repairable [192-01-11] —

    (A) with zero (or negligible) time to restoration;

    (B) with non-zero time to restoration.

In order to explain the dependability concepts which can be difficult to understand, keep the Standard self-contained and the mathematical formulae as simple as possible, the following basic mathematical models are used in this standard to quantify dependability measures:

(i) Systems —

  (A) state-transition models;

  (B) Markovian models.

(ii) Individual items —

  (A) random variable (time to failure) for non-repairable items;

  (B) simple (ordinary) renewal process for repairable items with zero time to restoration;

  (C) simple (ordinary) alternating renewal process for repairable items with non-zero time to restoration.

The application of each dependability measure is illustrated by means of simple examples.

This Standard is mainly applicable to hardware dependability, but many terms and their definitions may be applied to items containing software.

This Standard is identical with, and has been reproduced from, IEC 61703:2016, *Mathematical expressions for reliability, availability, maintainability and maintenance support terms*.

Documents
Document Sharing Hub

© Standards Australia Limited/Standards New Zealand 2020

Full document details: AS NZS IEC 61703-2020

As this document has been reproduced from an International Standard, the following applies:

(A) In the source text "this International Standard" should read "this Australian/New Zealand Standard".

(B) A full point substitutes for a comma when referring to a decimal marker.

Australian or Australian/New Zealand Standards that are identical adoptions of international normative references may be used interchangeably. Refer to the online catalogue for information on specific Standards.

The terms "normative" and "informative" are used in Standards to define the application of the appendices or annexes to which they apply. A "normative" appendix or annex is an integral part of a Standard, whereas an "informative" appendix or annex is only for information and guidance.

Documents
Document Sharing Hub
© Standards Australia Limited/Standards New Zealand 2020
Full document details: AS NZS IEC 61703-2020

CONTENTS

FOREWORD....6
INTRODUCTION....8
1 Scope....9
2 Normative references....10
3 Terms and definitions....10
4 Glossary of symbols and abbreviations....13
4.1 General....13
4.2 Acronyms used in this standard....13
4.3 Symbols used in this standard....15
5 General models and assumptions....18
5.1 Constituents of up and down times....18
5.2 Introduction to models and assumptions....19
5.3 State-transition approach....20
5.4 Model and assumptions for non-repairable individual items....22
5.5 Assumptions and model for repairable individual items....23
5.5.1 Assumption for repairable individual items....23
5.5.2 Instantaneous repair....24
5.5.3 Non-instantaneous repair....25
5.6 Continuously operating items (COI) versus intermittently operating individual items (IOI)....26
6 Mathematical models and expressions....27
6.1 Systems....27
6.1.1 General....27
6.1.2 Availability related expressions....29
6.1.3 Reliability related expressions....36
6.1.4 Mean operating time between failures [192-05-13] and mean time between failures....40
6.1.5 Instantaneous failure rate [192-05-06] and conditional failure intensity (Vesely failure rate)....41
6.1.6 Failure density and unconditional failure intensity [192-05-08]....44
6.1.7 Comparison of $\lambda(t)$, $\lambda_V(t)$, $z(t)$ and $f(t)$ for high and small MTTRs....47
6.1.8 Restoration related expressions....47
6.2 Non-repairable individual items....49
6.2.1 General....49
6.2.2 Instantaneous availability [192-08-01]....50
6.2.3 Reliability [192-05-05]....50
6.2.4 Instantaneous failure rate [192-05-06]....51
6.2.5 Mean failure rate [192-05-07]....52
6.2.6 Mean operating time to failure [192-05-11]....53
6.3 Repairable individual items with zero time to restoration....54
6.3.1 General....54
6.3.2 Reliability [192-05-05]....54
6.3.3 Instantaneous failure intensity [192-05-08]....56
6.3.4 Asymptotic failure intensity [192-05-10]....58
6.3.5 Mean failure intensity [192-05-09]....59
6.3.6 Mean time between failures (see 3.3)....60

AVA Documents
Document Sharing Hub

© Standards Australia Limited/Standards New Zealand 2020

Full document details: AS NZS IEC 61703-2020

6.3.7 Mean operating time to failure [192-05-11] 60
6.3.8 Mean operating time between failures [192-05-13] 61
6.3.9 Instantaneous availability [192-08-01], mean availability [192-08-05] and asymptotic availability [192-08-07] 61
6.3.10 Mean up time [192-08-09] 61
6.4 Repairable individual items with non-zero time to restoration 62
6.4.1 General 62
6.4.2 Reliability [192-05-05] 62
6.4.3 Instantaneous failure intensity [192-05-08] 64
6.4.4 Asymptotic failure intensity [192-05-10] 67
6.4.5 Mean failure intensity [192-05-09] 68
6.4.6 Mean operating time to failure [192-05-11] 69
6.4.7 Mean time between failures (see 3.3) 70
6.4.8 Mean operating time between failures [192-05-13] 71
6.4.9 Instantaneous availability [192-08-01] 71
6.4.10 Instantaneous unavailability [192-08-04] 73
6.4.11 Mean availability [192-08-05] 74
6.4.12 Mean unavailability [192-08-06] 76
6.4.13 Asymptotic availability [192-08-07] 78
6.4.14 Asymptotic unavailability [192-08-08] 78
6.4.15 Mean up time [192-08-09] 79
6.4.16 Mean down time [192-08-10] 81
6.4.17 Maintainability [192-07-01] 82
6.4.18 Instantaneous repair rate [192-07-20] 84
6.4.19 Mean repair time [192-07-21] 86
6.4.20 Mean active corrective maintenance time [192-07-22] 87
6.4.21 Mean time to restoration [192-07-23] 88
6.4.22 Mean administrative delay [192-07-26] 89
6.4.23 Mean logistic delay [192-07-27] 90
Annex A (informative) Performance aspects and descriptors 91
Annex B (informative) Summary of measures related to time to failure 92
Annex C (informative) Comparison of some dependability measures for continuously operating items 95
Bibliography 97

Figure 1 – Constituents of up time 18
Figure 2 – Constituents of down time 19
Figure 3 – Acronyms related to failure times 19
Figure 4 – Simple state-transition diagram 21
Figure 5 – Sample realization (chronogram) related to the system in Figure 4 22
Figure 6 – State-transition diagram of a non-repairable individual item 22
Figure 7 – Sample realization of a non-repairable individual item 23
Figure 8 – State-transition diagram of an instantaneously repairable individual item 24
Figure 9 – Sample realization of a repairable individual item with zero time to restoration 25
Figure 10 – State-transition diagram of a repairable individual item 25

Documents
Document Sharing Hub
© Standards Australia Limited/Standards New Zealand 2020
Full document details: AS NZS IEC 61703-2020

Figure 11 – Sample realization of a repairable individual item with non-zero time to restoration 26
Figure 12 – Comparison of an enabled time for a COI and an IOI 26
Figure 13 – Equivalent operating time for IOI items 27
Figure 14 – State-transition graph for a simple redundant system 27
Figure 15 – Markov graph for a simple redundant system 28
Figure 16 – Evolution of the state probabilities related to the Markov model in Figure 15 28
Figure 17 – Evolution of $A(t)$ and $U(t)$ related to the Markov model in Figure 15 29
Figure 18 – Evolution of the $Ast_i(0, t)$ related to the Markov model in Figure 15 31
Figure 19 – Instantaneous availability and mean availability of a periodically tested item 33
Figure 20 – Example of a simple production system 34
Figure 21 – Evolution of $A(t)$ and $K(t)$ 35
Figure 22 – Illustration of a system reliable behaviour over $[0, t]$ 36
Figure 23 – Illustration of a system reliable behaviour over time interval $[t_1, t_2]$ 37
Figure 24 – State-transition and Markov graphs for reliability calculations 37
Figure 25 – Evolution of the state probabilities related to the Markov model in Figure 24 38
Figure 26 – Evolution of $R(t)$ and $F(t)$ related to the Markov model in Figure 24 39
Figure 27 – Evolution of $Ast_i(0, t)$ related to the Markov model in Figure 24 40
Figure 28 – Time between failures versus operating time between failures 40
Figure 29 – Comparison between $\lambda(t)$ and $\lambda_V(t)$ related to the model in Figure 24 43
Figure 30 – Comparison between $z(t)$ and $f(t)$ 46
Figure 31 – Comparison of $\lambda(t)$, $\lambda_V(t)$, $z(t)$ and $f(t)$ for high and small values of MTTRs 47
Figure 32 – Illustration of reliable behaviour over $[t_1, t_2]$ for a zero time to restoration individual item 55
Figure 33 – Sample of possible number of failures at the renewal time t 56
Figure 34 – Illustration of reliable behaviour over $[t_1, t_2]$ for a non-zero time to restoration individual item 62
Figure 35 – Evolution of $R(t, t + 1/4)$ 64
Figure 36 – Sample of possible number of failures at the renewal time t 64
Figure 37 – Evolution of the failure intensity $z(t)$ 66
Figure 38 – Evolution of the mean failure intensity $z(t, t + 1/4)$ 69
Figure 39 – Illustration of available behaviour at time t for a non-zero time to restoration individual item 71
Figure 40 – Evolution of the instantaneous availability $A(t)$ 73
Figure 41 – Illustration of unavailable behaviour at time t for a non-zero time to restoration individual item 73
Figure 42 – Evolution of the instantaneous unavailability $U(t)$ 74
Figure 43 – Evolution of the mean availability $\overline{A}(t, t+1/4)$ 76
Figure 44 – Evolution of the mean unavailability $\overline{U}(t, t+1/4)$ 77
Figure 45 – Sample realization of the individual item state 80
Figure 46 – Plot of the up-time hazard rate function $\lambda_U(t)$ 80
Figure 47 – Evolution of the maintainability $M(t, t+16h)$ 84
Figure 48 – Evolution of the lognormal repair rate $\mu(t)$ 86

AVA Documents
Document Sharing Hub

© Standards Australia Limited/Standards New Zealand 2020

Full document details: AS NZS IEC 61703-2020

Figure A.1 – Performance aspects and descriptors 91

Table B.1 – Relations among measures related to time to failure of continuously operating items 92

Table B.2 – Summary of characteristics for some continuous probability distributions of time to failure of continuously operating items 93

Table B.3 – Summary of characteristics for some probability distributions of repair time 94

Table C.1 – Comparison of some dependability measures of continuously operating items with constant failure rate λ and restoration rate μ_R 95

Documents
Document Sharing Hub

© Standards Australia Limited/Standards New Zealand 2020

Full document details: AS NZS IEC 61703-2020

INTERNATIONAL ELECTROTECHNICAL COMMISSION

MATHEMATICAL EXPRESSIONS FOR RELIABILITY, AVAILABILITY, MAINTAINABILITY AND MAINTENANCE SUPPORT TERMS

FOREWORD

1) The International Electrotechnical Commission (IEC) is a worldwide organization for standardization comprising all national electrotechnical committees (IEC National Committees). The object of IEC is to promote international co-operation on all questions concerning standardization in the electrical and electronic fields. To this end and in addition to other activities, IEC publishes International Standards, Technical Specifications, Technical Reports, Publicly Available Specifications (PAS) and Guides (hereafter referred to as "IEC Publication(s)"). Their preparation is entrusted to technical committees; any IEC National Committee interested in the subject dealt with may participate in this preparatory work. International, governmental and non-governmental organizations liaising with the IEC also participate in this preparation. IEC collaborates closely with the International Organization for Standardization (ISO) in accordance with conditions determined by agreement between the two organizations.
2) The formal decisions or agreements of IEC on technical matters express, as nearly as possible, an international consensus of opinion on the relevant subjects since each technical committee has representation from all interested IEC National Committees.
3) IEC Publications have the form of recommendations for international use and are accepted by IEC National Committees in that sense. While all reasonable efforts are made to ensure that the technical content of IEC Publications is accurate, IEC cannot be held responsible for the way in which they are used or for any misinterpretation by any end user.
4) In order to promote international uniformity, IEC National Committees undertake to apply IEC Publications transparently to the maximum extent possible in their national and regional publications. Any divergence between any IEC Publication and the corresponding national or regional publication shall be clearly indicated in the latter.
5) IEC itself does not provide any attestation of conformity. Independent certification bodies provide conformity assessment services and, in some areas, access to IEC marks of conformity. IEC is not responsible for any services carried out by independent certification bodies.
6) All users should ensure that they have the latest edition of this publication.
7) No liability shall attach to IEC or its directors, employees, servants or agents including individual experts and members of its technical committees and IEC National Committees for any personal injury, property damage or other damage of any nature whatsoever, whether direct or indirect, or for costs (including legal fees) and expenses arising out of the publication, use of, or reliance upon, this IEC Publication or any other IEC Publications.
8) Attention is drawn to the Normative references cited in this publication. Use of the referenced publications is indispensable for the correct application of this publication.
9) Attention is drawn to the possibility that some of the elements of this IEC Publication may be the subject of patent rights. IEC shall not be held responsible for identifying any or all such patent rights.

International Standard IEC 61703 has been prepared by IEC technical committee 56: Dependability.

This second edition cancels and replaces the first edition published in 2001. This edition constitutes a technical revision.

This edition includes the following significant technical changes with respect to the previous edition:

a) standard made as self containing as possible;
b) item split between individual items and systems;
c) generalization of the dependability concepts for systems made of several components;
   – introduction of the conditional failure intensity (Vesely failure rate);
   – introduction of the state-transition and the Markovian models;

Documents
Document Sharing Hub

© Standards Australia Limited/Standards New Zealand 2020

Full document details: AS NZS IEC 61703-2020

– generalization of the availability to production availability;

d) introduction of curves to illustrate the various concepts.

The text of this standard is based on the following documents:

FDIS	Report on voting
56/1682/FDIS	56/1693/RVD

Full information on the voting for the approval of this standard can be found in the report on voting indicated in the above table.

This publication has been drafted in accordance with the ISO/IEC Directives, Part 2.

This International Standard is to be used in conjunction with IEC 60050-192:2015.

The committee has decided that the contents of this publication will remain unchanged until the stability date indicated on the IEC website under "http://webstore.iec.ch" in the data related to the specific publication. At this date, the publication will be

- reconfirmed,
- withdrawn,
- replaced by a revised edition, or
- amended.

Documents
Document Sharing Hub
© Standards Australia Limited/Standards New Zealand 2020
Full document details: AS NZS IEC 61703-2020

INTRODUCTION

IEC 60050-192 provides definitions for dependability and its influencing factors, reliability, availability, maintainability and maintenance support, together with definitions of other related terms commonly used in this field. Some of these terms are measures of specific dependability characteristics, which can be expressed mathematically.

It is important for the users to understand the mathematical meaning of those expressions and how they are established. This is the purpose of the present International Standard which, used in conjunction with IEC 60050-192, provides practical guidance essential for the quantification of those measures. For those requiring further information, for example on detailed statistical methods, reference should be made to the IEC 60605 series [23][1].

Annex A provides a diagrammatic explanation of the relationships between some basic dependability terms, related random variables, probabilistic descriptors and modifiers.

Annex B provides a summary of measures related to time to failure.

Annex C compares some dependability measures for continuously operating items.

The bibliography gives references for the mathematical basis of this standard, in particular, the mathematical material is based on references [2], [6], [8], [9], [13], [14] and [18]; the renewal theory (renewal and alternating renewal processes) can be found in [6], [8], [9], [10], [11], [13], [15], and [17]; and more advanced treatment of renewal theory can be found in references [1], [3], [12], [16], [19] and [20]. More information on the theory and applications of Markov processes can be found in references [3], [9], [10], [15], [16], [17] and [19].

[1] Numbers in brackets refer to the Bibliography.

Documents
Document Sharing Hub

© Standards Australia Limited/Standards New Zealand 2020

Full document details: AS NZS IEC 61703-2020

MATHEMATICAL EXPRESSIONS FOR RELIABILITY, AVAILABILITY, MAINTAINABILITY AND MAINTENANCE SUPPORT TERMS

1 Scope

This International Standard provides mathematical expressions for selected reliability, availability, maintainability and maintenance support measures defined in IEC 60050-192:2015. In addition, it introduces some terms not covered in IEC 60050-192:2015. They are related to aspects of the system of item classes (see hereafter).

According to IEC 60050-192:2015, dependability [192-01-22] is the ability of an item to perform as and when required and an item [192-01-01] can be an individual part, component, device, functional unit, equipment, subsystem, or system.

To account for mathematical constraints, this standard splits the items between the individual items considered as a whole (e.g. individual components) and the systems made of several individual items. It provides general considerations for the mathematical expressions for systems as well as individual items but the individual items which are easier to model are analysed in more detail with regards to their repair aspects.

The following item classes are considered separately:

- Systems;
- Individual items:
  - non-repairable [192-01-12];
  - repairable [192-01-11]:
    - i) with zero (or negligible) time to restoration;
    - ii) with non-zero time to restoration.

In order to explain the dependability concepts which can be difficult to understand, keep the standard self-contained and the mathematical formulae as simple as possible, the following basic mathematical models are used in this standard to quantify dependability measures:

- Systems:
  - state-transition models;
  - Markovian models.
- Individual items:
  - random variable (time to failure) for non-repairable items;
  - simple (ordinary) renewal process for repairable items with zero time to restoration;
  - simple (ordinary) alternating renewal process for repairable items with non-zero time to restoration.

The application of each dependability measure is illustrated by means of simple examples.

This standard is mainly applicable to hardware dependability, but many terms and their definitions may be applied to items containing software.

Documents
Document Sharing Hub
© Standards Australia Limited/Standards New Zealand 2020
Full document details: AS NZS IEC 61703-2020

2 Normative references

The following documents, in whole or in part, are normatively referenced in this document and are indispensable for its application. For dated references, only the edition cited applies. For undated references, the latest edition of the referenced document (including any amendments) applies.

IEC 60050-192:2015, *International electrotechnical vocabulary – Part 192: Dependability* (available at http://www.electropedia.org)

ISO 3534-1:2006, *Statistics – Vocabulary and symbols – Part 1: General statistical terms and terms used in probability*

3 Terms and definitions

For the purposes of this document, the terms and definitions given in IEC 60050-192:2015, ISO 3534-1 and the following apply.

NOTE To facilitate the location of the full definition, the IEC 60050-192 reference for each term is shown [in square brackets] immediately following each term, for example:

mean time to restoration **[192-07-23]**

The terms and definitions given in Clause 3, which do not appear in IEC 60050-192, are used in order to facilitate the presentation of mathematical expressions of some IEC 60050-192 terms. Some terms have been taken from IEC 60050-192 and modified for the needs of this standard.

3.1
instantaneous restoration intensity
restoration intensity
restoration frequency
$\nu(t)$
limit, if it exists, of the quotient of the mean number of restorations [192-06-23] of a repairable item [192-01-11] within time interval [t, $t + \Delta t$], and Δt, when Δt tends to zero, given that the item is as good as new at $t = 0$

$$\nu(t) = \lim_{\Delta t \to 0+} \frac{E\left[N_{\mathrm{R}}(t+\Delta t) - N_{\mathrm{R}}(t) \mid \text{as good as new at } t = 0\right]}{\Delta t}$$

where

$N_{\mathrm{R}}(t)$ is the number of restorations in the time interval [0, t];

E denotes the expectation.

Note 1 to entry: The difference between the restoration intensity and the repair rate comes from the conditions: the item is as good as new at time $t = 0$ for the restoration intensity and for the repair rate the repair starts at time $t = 0$. From a mathematical point of view, the restoration intensity is similar to the unconditional failure intensity (see 3.8).

Note 2 to entry: The unit of measurement of instantaneous restoration intensity is the unit of time to the power-1.

3.2
instantaneous repair rate
repair rate
$\mu(t)$
limit, if it exists, of the quotient of the conditional probability that the repair is completed within time interval [t, $t + \Delta t$] and Δt, when Δt tends to zero, given that the repair started at $t = 0$ and had not been completed before time t

© Standards Australia Limited/Standards New Zealand 2020

Full document details: AS NZS IEC 61703-2020

Note 1 to entry: The difference between the restoration intensity and the repair rate comes from the conditions: the item is as good as new at time t = 0 for the restoration intensity and for the repair rate the repair starts at time t = 0. From a mathematical point of view, the repair rate is similar to the failure rate (see 3.6).

[SOURCE: IEC 60050-192:2015, 192-07-20, modified — Note 1 to entry has been replaced and Note 2 to entry deleted]

3.3
mean time between failures
METBF
expectation of the time which elapses between successive failures

Note 1 to entry: The concept of mean time between failures has been omitted from IEC 60050-192. It was defined in IEC 60050-191 as "the expectation of time between failures". The definition has been modified to explain the acronym METBF (mean elapsed time between failures) which is used in this standard to avoid any confusion between the mean time between failure (METBF) and the mean operating time between failures (MTBF or MOTBF).

[SOURCE: IEC 60050-191:1990, 191-12-08, modified — acronym and Note 1 to entry added]

3.4
up-time distribution function
function giving, for every value of t, the probability that an up-time will be less than, or equal to, t

Note 1 to entry: If the up-time is (strictly) positive and a continuous random variable, then $F_U(0) = 0$ and

$$F_U(t) = 1 - \exp\left(-\int_0^t \lambda_U(x)\,\mathrm{d}x\right)$$

where

$\lambda_U(t)$ is the instantaneous up-time hazard rate function.

Note 2 to entry: The up-time distribution function is the general up-time distribution valid for both COI (continuously operating item) and IOI (intermittently operating item). For COIs, $F_U(t) = F(t)$

Note 3 to entry: If the up time is exponentially distributed, then

$$F_U(t) = 1 - \exp(-t/\mathrm{MUT})$$

where MUT is the mean up-time.

In this case, the reciprocal of MUT is denoted by λ_U and λ_U = 1/MUT

3.5
instantaneous up-time hazard rate function
up-time hazard rate function
$\lambda_U(t)$
limit, if it exists, of the quotient of the conditional probability that the up-time will end within time interval $[t, t + \Delta t]$ and Δt, when Δt tends to zero, given that the up-time started at t = 0 and had not been finished before time t

Note 1 to entry: The instantaneous up-time hazard rate function is expressed by the formula:

$$\lambda_U(t) = \lim_{\Delta t \to 0+} \frac{1}{\Delta t} \frac{F_U(t+\Delta t) - F_U(t)}{1 - F_U(t)} = \frac{f_U(t)}{1 - F_U(t)}$$

where $F_U(t)$ is the up-time distribution function and $f_U(t)$ is the probability density function of the up-time.

Note 2 to entry: $\lambda_U(t)$ is the general hazard rate for the up times valid for both COI and IOI. For COIs, $\lambda_U(t) = \lambda(t)$ (see 3.6).

Note 3 to entry: If the up time is exponentially distributed, then the instantaneous up-time hazard rate function is constant in time and is denoted by λ_U.

Documents
Document Sharing Hub
© Standards Australia Limited/Standards New Zealand 2020
Full document details: AS NZS IEC 61703-2020

Note 4 to entry: The unit of measurement of instantaneous up-time hazard rate function is the unit of time to the power –1.

3.6
instantaneous failure rate
failure rate
$\lambda(t)$
limit, if it exists, of the quotient of the conditional probability that the failure of an item occurs within time interval [t, $t + \Delta t$], by Δt, when Δt tends to zero, given that failure has not occurred within time interval [0, t]

Note 1 to entry: The instantaneous failure rate is expressed by the formula:

$$\lambda\ (t) = \lim_{\Delta t \to 0+} \frac{1}{\Delta t} \frac{F(t+\Delta t) - F(t)}{R(t)} = \frac{f(t)}{R(t)}$$

where $F(t)$ and $f(t)$ are, respectively, the distribution function and the probability density at the failure instant, and where $R(t)$ is the reliability function, related to the reliability $R(t_1, t_2)$ by $R(t) = R(0, t)$.

Note 2 to entry: The restriction to non-repairable items in the definition provided by IEC 60050-192 can be removed to generalize this definition for any kind of items i.e. systems or individual items, repairable or not.

Note 3 to entry: The instantaneous failure rate is the up-time hazard rate for COIs. In this case, $\lambda(t) = \lambda_U(t)$ (see 3.5).

Note 4 to entry: When $\Delta t \to 0+$, the failure rate is the conditional probability per unit of time that the item fails between t and $t + \Delta t$, given it is in up state all over the time interval [0, t]. It is usually assumed that the item is as good as new at time 0.

Note 5 to entry: The instantaneous failure rate may be also expressed by the formula:

$$\lambda(t) = \lim_{\Delta t \to 0+} \frac{E\left[N(t+\Delta t) - N(t) \mid \text{up state over [0, t]}\right]}{\Delta t}$$

where $N(t)$ is the number of failures in the time interval [0, t], where E denotes the expectation.

This form of the definitions allows comparisons of the failure rate to the conditional failure intensity and to the unconditional failure intensity.

[SOURCE: IEC 60050-192:2015, 192-05-06, modified — generalized to systems with repairable components and Notes to entry added]

3.7
conditional failure intensity
Vesely failure rate
$\lambda_V(t)$
limit, if it exists, of the quotient of the mean number of failures of a repairable item within time interval [t, $t + \Delta t$], by Δt, when Δt tends to zero, given that the item is in up state at time t and as good as new at time 0

Note 1 to entry: The instantaneous failure intensity is expressed by the formula:

$$\lambda_V(t) = \lim_{\Delta t \to 0+} \frac{E\left[N(t+\Delta t) - N(t) \mid \text{up state at } t \text{ and as good as new at time 0}\right]}{\Delta t}$$

where $N(t)$ is the number of failures in the time interval [0, t], where E denotes the expectation.

Note 2 to entry: When $\Delta t \to 0+$, the conditional failure intensity is the probability per unit of time that the item fails between t and $t + \mathrm{d}t$, given it is in up state at time t and as good as new at time 0. In particular cases (quick restoration of failures), it provides good approximations of the failure rate. This parameter introduced in 1970 by W. E. Vesely [26] is also called Vesely failure rate.

Note 3 to entry: According to the definitions, $\lambda_V(t)$ and $z(t)$ are linked by the formula: $\lambda_V(t) = z(t)/A(t)$. where $A(t)$ is the item instantaneous availability at time t.

© Standards Australia Limited/Standards New Zealand 2020

Full document details: AS NZS IEC 61703-2020

3.8
unconditional failure intensity
instantaneous failure intensity
failure intensity
failure frequency
$z(t)$
limit, if it exists, of the quotient of the mean number of failures of a repairable item within time interval $[t, t + \Delta t]$, by Δt, when Δt tends to zero, given that the item is as good as new at time $t = 0$

Note 1 to entry: The instantaneous failure intensity is expressed by the formula:

$$z(t) = \lim_{\Delta t \to 0+} \frac{E\left[N(t+\Delta t) - N(t) \mid \text{as good as new at } t = 0\right]}{\Delta t}$$

where $N(t)$ is the number of failures in the time interval $[0, t]$, where E denotes the expectation and where the implicit condition that the item is as good as new at time $t = 0$ has been added.

Note 2 to entry: The unconditional failure intensity is the failure intensity as defined in IEC 60050-192:2015 [192-05-08]. It is also sometimes named ROCOF (rate of occurrence of failure).

Note 3 to entry: When $\Delta t \to 0+$, the unconditional failure intensity is the probability per unit of time that the item fails between t and $t + dt$ given that the item is in up state at time $t = 0$. Here the item may be in any state at time t and this is why the adjective unconditional is used.

Note 4 to entry: According to the definitions, $\lambda_V(t)$ and $z(t)$ are linked by the formula: $z(t) = A(t).\ \lambda_V(t)$ where $A(t)$ is the item instantaneous availability at time t.

[SOURCE: IEC 60050-192:2015, 192-05-08, modified — synonyms have been added and the entry has been revised]

3.9
continuously operating item
COI
item for which operating time [192-02-05] is equal to its enabled time [192-02-17]

3.10
intermittently operating item
IOI
item for which operating time [192-02-05] is less than its enabled time [192-02-17]

Note 1 to entry: In this case, the enabled time of the item is made of the sum of the times spent in the operating [192-02-04], idle [192-02-14] and standby [192-02-10] states.

4 Glossary of symbols and abbreviations

4.1 General

The symbols and abbreviations given in Clause 4 are widely used and recommended, however, they are not mandatory. For consistency of presentation, the notation in this document may differ from that used in a referenced document.

4.2 Acronyms used in this standard

Acronym/abbreviation	Meaning
COI	Continuously operating item
IOI	Intermittently operating item
MACMT	Mean active corrective maintenance time, i.e. the expectation of the active corrective maintenance time

Documents
Document Sharing Hub
© Standards Australia Limited/Standards New Zealand 2020
Full document details: AS NZS IEC 61703-2020

Acronym/abbreviation	Meaning
$\widehat{\text{MACMT}}$	Point estimate of the mean active corrective maintenance time
MAD	Mean administrative delay
$\widehat{\text{MAD}}$	Point estimate of the mean administrative delay
MADT(t_1, t_2)	Mean accumulated down time over the time interval [t_1, t_2]
$\widehat{\text{MADT}}(t_1, t_2)$	Point estimate of the mean accumulated down time over the time interval [t_1, t_2]
MAUT(t_1, t_2)	Mean accumulated up time over the time interval [t_1, t_2]
$\widehat{\text{MAUT}}(t_1, t_2)$	Point estimate of the mean accumulated up time over the time interval [t_1, t_2]
MDT	Mean down time
$\widehat{\text{MDT}}$	Point estimate of the mean down time
METBF	Mean (elapsed) time between failures
MFDT	Mean fault detection time, i.e. the expectation of the fault detection time
MLD	Mean logistic delay
$\widehat{\text{MLD}}$	Point estimate of the mean logistic delay
MMAT	Mean maintenance action time, i.e. the expectation of a given maintenance action time
MRT	Mean repair time
$\widehat{\text{MRT}}$	Point estimate of the mean repair time
MOTBF	Mean operating time between failures
MTD	Mean technical delay, i.e. the expectation of the technical delay
MTTF	Mean time to failure
$\widehat{\text{MTTF}}$	Point estimate of the mean time to failure
MTTR	Mean time to restoration
$\widehat{\text{MTTR}}$	Point estimate of the mean time to restoration
MUT	Mean up time
$\widehat{\text{MUT}}$	Point estimate of the mean up time
RT_i	Observed repair time of item i
TTF_i	Time to failure of item i
VRT	The variance of repair time, VRT = $Var[\zeta] = E[\zeta^2] - \text{MRT}^2$, where ζ is a random variable representing the repair time, Var denotes the variance and E denotes the expectation

© Standards Australia Limited/Standards New Zealand 2020

Documents
Document Sharing Hub

Full document details: AS NZS IEC 61703-2020

4.3 Symbols used in this standard

Symbol	Meaning
$[t_1, t_2]$	Interval where t_1 is the lower bound and t_2 the upper bound ($t_1 < t_2$)
$Ast_i(t_1, t_2)$	Mean accumulated sojourn time in state i over the interval $[t_1, t_2]$
A	Asymptotic availability
$A(t)$	Instantaneous availability (availability function), i.e. the probability of the item being in an up state at the instant of time t
$\overline{A}(t_1,t_2)$	Mean availability for the time interval $[t_1, t_2]$
$\overline{A}$	Asymptotic mean availability
$\hat{\overline{A}}(t_1,t_2)$	Point estimate of the mean availability for the time interval $[t_1, t_2]$
Δt	Small strictly positive increment of time. $\Delta t > 0$
$\mathrm{d}t$	Infinitesimal strictly positive increment of time (i.e. Δt which tends to zero)
$E[.]$	Expectation
$F_{\mathrm{U}}(t)$	Up time distribution function
$f_{\mathrm{U}}(t)$	Probability density function of the up times NOTE For COIs, $f_{\mathrm{U}}(t) = f(t)$.
$f(t)$	Probability density function of the (operating) times to failure
$\hat{f}(t)$	Point estimate at time t of the probability density function of the (operating) time to failure
$f_{\mathrm{R+U}}(t)$	Probability density function of the sum of the time to restoration and the following up time
$G(t)$	Distribution function of the repair times
$G_{\mathrm{ACM}}(t)$	Distribution function of the active corrective maintenance time
$G_{\mathrm{R}}(t)$	Distribution function of the times to restoration
$g(t)$	Probability density function of the repair times
$\hat{g}(t)$	Point estimate at time t of the probability density function of the repair time
$g_{\mathrm{ACM}}(t)$	Probability density function of the active corrective maintenance times
$g_{\mathrm{AD}}(t)$	Probability density function of the administrative delays
$g_{\mathrm{D}}(t)$	Probability density function of the down times
$g_{\mathrm{LD}}(t)$	Probability density function of the logistic delays
$g_{\mathrm{MA}}(t)$	Probability density function of the given maintenance action time
$g_{\mathrm{R}}(t)$	Probability density function of the times to restoration
$h^{(n)}_{\mathrm{CTTF}}(t)$	Probability density function of calendar time to the nth failure, $n \geq 1$
K_{A}, K_{S} , K_i	Nominal (production) capacity related to an item A, a system S or a state i
$K(t)$	Instantaneous (production) capacity related to a system
k	Number of repair times during a given period of observation

Documents
Document Sharing Hub
© Standards Australia Limited/Standards New Zealand 2020
Full document details: AS NZS IEC 61703-2020

Symbol	Meaning
k_{ACM}	Number of active corrective maintenance times during a given period of observation
k_{AD}	Number of administrative delays during a given period of observation
k_D	Number of down times during a given period of observation
k_F	Number of failures during a given period of observation
k_{LD}	Number of logistic delays during a given period of observation
k_O	Number of failures while operating during a given period of observation
k_R	Number of times to restoration during a given period of observation
k_U	Number of up times during a given period of observation
λ	Constant failure rate, i.e. the reciprocal of mean time to failure (MTTF) when time to failure is exponentially distributed
$\lambda(t)$	Instantaneous failure rate
$\lambda(\infty)$	Asymptotic failure rate
$\hat{\lambda}$	Point estimate of the constant failure rate
$\hat{\lambda}(t)$	Point estimate of the instantaneous failure rate at time t
$\bar{\lambda}(t_1, t_2)$	Mean failure rate for the time interval $[t_1, t_2]$
λ_U	Constant up-time hazard rate function, i.e. the reciprocal of the mean up time (MUT) when up times are exponentially distributed NOTE 1 For COIs, $\lambda_U = \lambda$
$\lambda_U(t)$	The up-time hazard rate function NOTE 2 For COIs, $\lambda_U(t) = \lambda(t)$
$\lambda_V(t)$	Conditional failure intensity (Vesely failure rate)
$\lambda_V(\infty)$	Asymptotic conditional failure intensity (Asymptotic Vesely failure rate)
$M(t)$	Maintainability function, i.e. the probability of completing a given maintenance action within time t: $M(t) = M(t_1, t_2)$ for $t_1 = 0$ and $t_2 = t$
$\hat{M}(t)$	Point estimate at time t of the maintainability function
$M(t_1, t_2)$	Maintainability for the time interval $[t_1, t_2]$
m	Number of observed maintenance action times
$m_{MAT}(t)$	Number of maintenance action times with duration greater that t ($m_{MAT}(0) = m$)
μ	Constant repair rate, i.e. the reciprocal of the mean repair time (MRT) when the repair times are exponentially distributed
$\mu(t)$	Instantaneous repair rate
$\hat{\mu}(t)$	Point estimate at time t of the instantaneous repair rate
μ_{ACM}	Reciprocal of the mean active corrective maintenance time (MACMT) when the active corrective maintenance times are exponentially distributed

Documents
Document Sharing Hub

© Standards Australia Limited/Standards New Zealand 2020

Full document details: AS NZS IEC 61703-2020

Symbol	Meaning
μ_{AD}	Reciprocal of the mean administrative delay (MAD) when the administrative delays are exponentially distributed
μ_{D}	Reciprocal of the mean down time (MDT) when the down times are exponentially distributed
μ_{LD}	Reciprocal of the mean logistic delay (MLD) when the logistic delays are exponentially distributed
μ_{MA}	Constant rate of the completion of a given maintenance action, when the maintenance action time is exponentially distributed
μ_{R}	Constant restoration rate, i.e. the reciprocal of the mean time to restoration (MTTR) when the times to restoration are exponentially distributed
$N(t)$	Number of failures occurring in the time interval [0, t]
$N_{R}(t)$	Number of restorations occurring in the time interval [0, t]
n	Number of items in the population
$n_{D}\{t\}$	Number of items that are in a down state at the instant of time t
$n_{F}(t, t + \Delta t)$	Number of failures observed during the time interval [t, $t + \Delta t$], where the time scale includes both up and down times
$n_{F}(t_1, t_2)$	Number of failures observed during the time interval [t_1, t_2], where the time scale includes both up and down times
$n_{R}(t)$	Number of repairable items that are still under repair at the instant of time t ($n_{R}(0) = n$)
$n_{R}(t + \Delta t) - n_{R}(t)$	Number of items with repair completed in the time interval [t, $t + \Delta t$]
$n_{S}(t)$	Number of (non-repairable) items that are still operational at the instant of time t ($n_{S}(0) = n$)
$n_{S}(t_1, t_2)$	Number of items that were operational at the instant of time t_1 and operated without failure in the time interval [t_1, t_2]
$n_{S}(t + \Delta t) - n_{S}(t)$	Number of items that fail in the time interval [t, $t + \Delta t$]
$n_{U}\{t\}$	Number of items that are in an up state at the instant of time t
$v(t)$	Instantaneous restoration intensity
$P(.)$	Probability. The dot stands for any relevant event or random variable
$P_i(t)$, $P_i^{(av)}(t)$, $P_i^{(rel)}(t)$	Probability of state i in state-transition models, probability of state i for an "availability" Markov graph (see 6.1.2.1), probability of state i for a "reliability" Markov graph (see 6.1.3.1)
$Prod(t)$	Instantaneous production at time t
$\overline{Prod}(t_1,t_2)$	Mean production availability over the time interval [t_1, t_2]
$R(t)$	Reliability function, i.e. the probability of survival until time t $R(t) = R(t_1, t_2)$ for $t_1 = 0$ and $t_2 = t$
$\hat{R}(t)$	Point estimate at time t of the reliability function
$R(t_1, t_2)$	Reliability for the time interval [t_1, t_2]
$\hat{R}(t_1,t_2)$	Point estimate for the time interval [t_1, t_2] of the reliability function
$R(t, t+x \mid t)$	Conditional reliability for the time interval [t, $t + x$], assuming that the item is in up state at time t
ρ	Production per unit of time

Documents
Document Sharing Hub

© Standards Australia Limited/Standards New Zealand 2020

Full document details: AS NZS IEC 61703-2020

Symbol	Meaning
t	Instant in time
T	Instant in time or duration depending on the context
$\overline{Tbf}(t)$	Mean elapsed time between the consecutive failures occurring over the time interval [0, t]
τ	Instant in time or tests interval depending on the context
U	Asymptotic unavailability
$U(t)$	Instantaneous unavailability (unavailability function)
$\overline{U}(t_1,t_2)$	Mean unavailability for the time interval [t_1, t_2]
$\overline{U}$	Asymptotic mean unavailability
$\hat{\overline{U}}(t_1,t_2)$	Point estimate of the mean unavailability for the time interval [t_1, t_2]
$V(t_1, t_2)$	Mean number of restorations over the time interval [t_1, t_2]
$Z(t)$	Expected number of failures in the time interval [0, t] $Z(t) = E[N(t)]$, where E denotes the expectation
$z(t)$	Instantaneous failure intensity (failure frequency)
$z(\infty)$	Asymptotic failure intensity
$\hat{z}(t)$	Point estimate of the instantaneous failure intensity at time t
$\overline{z}(t_1,t_2)$	Mean failure intensity for the time interval [t_1, t_2]
$\hat{\overline{z}}(t_1,t_2)$	Point estimate of the mean failure intensity for the time interval [t_1, t_2]

5 General models and assumptions

5.1 Constituents of up and down times

In order to understand the mathematical expressions included in this standard, it is important to understand what constitutes up time and down time. IEC 60050-192 splits the up time (where the item performs as required) and down time (where the item does not perform as required) into their constituents. This is summarized in Figure 1 and Figure 2 in IEC 60050-192:2015 which also provides definitions of mean values for some of those constituents.

Figure 1 and Figure 2 (that have been adapted from IEC 60050-192) respectively summarize the constituents of up time and down time which are relevant to this standard. (Neither the “preventive maintenance time” nor the “externally disabled” time have been considered). The acronyms for the mean values included in this standard have been added in Figures 1 and 2.

<table>
<tr><td colspan="3">Up time [192-02-02]</td></tr>
<tr><td colspan="3">Enabled time [192-02-17]</td></tr>
<tr><td rowspan="2">Operating time [192-02-05]</td><td colspan="2">Non operating time [192-02-07]</td></tr>
<tr><td>Idle time [192-02-15]</td><td>Standby time [192-02-13]</td></tr>
<tr><td colspan="3">MUT [192-08-09]</td></tr>
</table>

IEC

Figure 1 – Constituents of up time

© Standards Australia Limited/Standards New Zealand 2020

Documents
Document Sharing Hub

Full document details: AS NZS IEC 61703-2020

<table>
<tr><td colspan="8">Down time [192-02-21]</td></tr>
<tr><td colspan="8">Non-operating time [192-02-07]</td></tr>
<tr><td colspan="8">Time to restoration [192-07-06]</td></tr>
<tr><td colspan="5">Corrective maintenance time [192-07-07]</td><td rowspan="4">Fault detection time [192-07-11]</td><td rowspan="4">Administrative delay [192-07-12]</td></tr>
<tr><td rowspan="3">Logistic delay [192-07-13]</td><td colspan="4">Active corrective maintenance time [192-07-10]</td></tr>
<tr><td rowspan="2">Technical delay [192-07-15]</td><td colspan="3">Repair time [192-07-19]</td></tr>
<tr><td>Fault localization time [192-07-18]</td><td>Fault correction time [192-07-14]</td><td>Function checkout time [192-07-16]</td></tr>
<tr><td rowspan="2">MLD [192-07-27]</td><td>MTD</td><td colspan="3">MRT [192-07-21]</td><td rowspan="2">MFDT</td><td rowspan="2">MAD [192-07-26]</td></tr>
<tr><td colspan="4">MACMT [192-07-22]</td></tr>
<tr><td colspan="8">MTTR [192-07-23]</td></tr>
<tr><td colspan="8">MDT [192-08-10]</td></tr>
</table>

IEC

Figure 2 – Constituents of down time

IEC 60050-192 defines several acronyms for mean time related to the item failures occurring during the operating state. This is summarized in Figure 3.

<table>
<tr><td colspan="2">Non-repairable item [192-01-12]</td><td colspan="2"></td></tr>
<tr><td>Operating time to 1st failure [192-05-02]</td><td>Operating time to failure [192-05-01]</td><td>Operating time between failures [192-05-04]</td><td>(Elapsed) time between failures [192-05-03]</td></tr>
<tr><td>MTTFF [192-05-12]</td><td>MTTF [192-05-11]</td><td>MOTBF / MTBF [192-05-13]</td><td>METBF</td></tr>
<tr><td colspan="4">Repairable item [192-01-11]</td></tr>
</table>

IEC

Figure 3 – Acronyms related to failure times

NOTE In text books on the subject of reliability, the acronym MTBF is often used for the mean time between failures. According to IEC 60050-192, this acronym is used for the mean "operating" time between failures. Therefore to avoid any confusion, the acronym METBF (see 3.3) is used in this standard for the mean time between failures.

5.2 Introduction to models and assumptions

In order to derive correct mathematical expressions for selected dependability measures defined in IEC 60050-192, distinction is made between items considered as a whole (individual items) and items made of several individual items (systems). The following classes of items are considered separately in this standard:

- Systems;
- Individual items:
  - non-repairable items [192-01-12];
  - repairable items [192-01-11]:
    - i) with zero time to restoration;
    - ii) with non-zero time to restoration.

NOTE 1 The term "item" is used in this standard when it applies to systems and individual items.

Documents
Document Sharing Hub

© Standards Australia Limited/Standards New Zealand 2020

Full document details: AS NZS IEC 61703-2020

NOTE 2 The term "non-repairable" item encompasses items which are either not repairable or are repairable but are not repaired when failed. The term "repairable" item encompasses only those items which are repairable and actually repaired when failed.

In order to keep the standard self-contained and the mathematical formulae as simple as possible, the following basic mathematical models are used to quantify dependability measures:

– state-transition models for systems;
– renewal processes for individual items.

The general way to model an item is to identify its various states and to analyse how it goes from state to state when the time is elapsing: this can be done by using state-transition models. Such models are useful in illustrating the development of the mathematical expressions for various dependability measures. When no particular assumptions are made regarding the probabilistic distributions, these models can be handled only in particular and simple cases using analytical calculations. Otherwise Monte Carlo simulation needs to be used. This is why, for systems, as well as individual items, the hypothesis of constant transition rates, is often made in order to use Markovian models which are well known and for which powerful analytical algorithms are available.

For individual items, under the assumption that they have only two states, the general formulae with non-constant transition rates can be derived to some extent. This is shown in 6.2, 6.3 and 6.4:

– non-repairable individual items: this is the simplest mathematical model as only one random variable applies: the time to failure of the item [192-05-01]. It can be characterized by its reliability $R(t)$, its instantaneous failure rate, $\lambda(t)$ [192-05-06], also referred to as the hazard rate associated with the time to failure distribution (i.e. the unreliability function) or its mean time to failure MTTF [192-05-11] which is also its mean time to first failure MTTFF [192-05-12].
– repairable individual items: the basic model is a simple (ordinary) renewal process, when the time to restoration of the item may be neglected, or a simple (ordinary) alternating renewal process in which the time to restoration of the item is non-zero. In the latter case, the item alternates between an up state and a down state, and, in addition to the common dependability measures, a widely used measure of reliability of the item is the failure intensity [192-05-08], which, in this case, is equal to the renewal density.

To avoid improper use of these mathematical expressions, which could yield erroneous results, the specific assumptions detailed in 5.4 and 5.5 should be observed.

In order to allow for easy comprehension, some definitions have been repeated in different parts of this standard, as needed.

5.3 State-transition approach

A simple way to introduce the dependability concepts is to analyse the behaviour of an item (i.e. an individual item or a system) during its evolution between up and down states.

This can be done by using a state-transition graph such as the one presented in the right hand side of Figure 4. It is related to the system represented by the reliability block diagram (see IEC 61078 [25]) on the left hand side of the figure. This system is made of three similar blocks (A_i) organized in a two out of three architecture and of one block B in standby position which immediately takes over the function of the first of the blocks A_i going to its down state. The switching between A_i and B is considered to be perfect (i.e. instantaneous and without failure).

© Standards Australia Limited/Standards New Zealand 2020

Documents
Document Sharing Hub

Full document details: AS NZS IEC 61703-2020

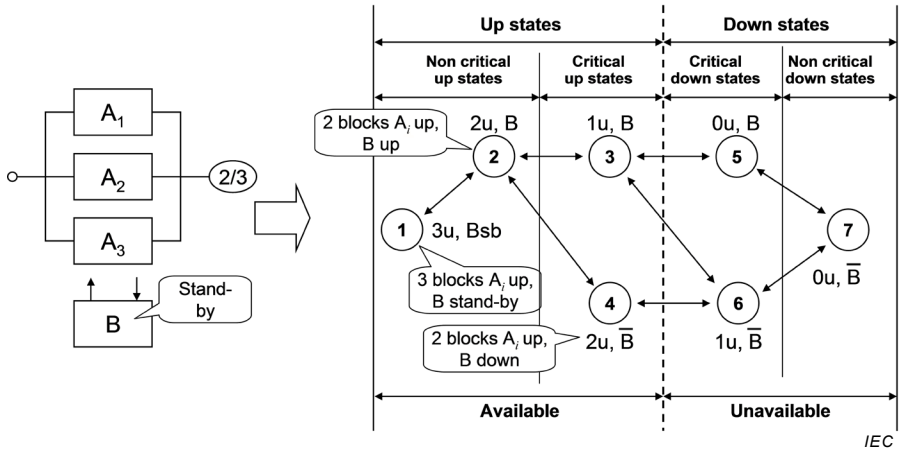

Figure 4 – Simple state-transition diagram

As the blocks (A_i) are similar, the similar states can be aggregated to obtain the state-transition diagram presented in the right hand side of Figure 4. It comprises seven states represented by circles and sixteen transitions represented by arrows. For example, the state 3 aggregates three similar states (A_1 and B in up states and other blocks in down states, A_2 and B in up states and other blocks in down states, A_3 and B in up states and other blocks in down states) and the line with arrows on each end between states 2 and 3 means that the system can have transitions from 2 to 3 and from 3 to 2.

This state-transition diagram is sufficient to identify the classes of states which are essential to define and understand the key dependability measures (e.g. availability, reliability, failure rate, failure intensities, failure density).

The states can be grouped into two main classes which can furthermore be subdivided in two sub classes:

- system up state class: states 1, 2, 3 and 4 (where at least 2 of the blocks are in up states). It is subdivided into:
  - non critical up state class: states 1 and 2 which are separated from the down state class by more than one transition;
  - critical up states class: states 3 and 4 which are separated from the down state class by only one transition;
- system down state class: 5, 6 and 7 (where less than 2 of the blocks are in up states). It is subdivided into:
  - non critical down state class: state 7 which is separated from the up state class by more than one transition;
  - critical down state class: states 5 and 6 which are separated from the up state class by only one transition.

Documents
Document Sharing Hub
© Standards Australia Limited/Standards New Zealand 2020
Full document details: AS NZS IEC 61703-2020

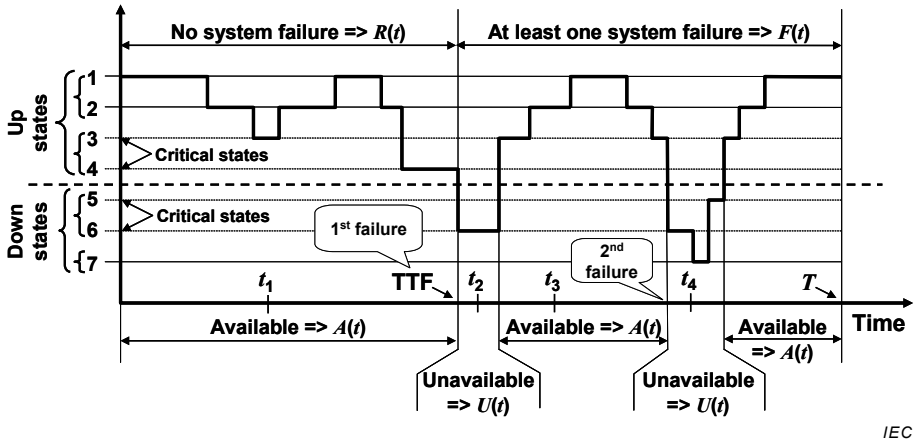

Figure 5 – Sample realization (chronogram) related to the system in Figure 4

When the transitions between the states occur randomly (e.g. according to failures and restorations of the various blocks) the behaviour of the system constitutes a stochastic process. One example of realization of this stochastic process (i.e. a trajectory of the process) over a time interval [0, T] is illustrated in Figure 5:

– the system is in up state (i.e. available) at time t_1, t_3 or T;
– the system is in down state (i.e. unavailable) at time t_2 or t_4;
– the system has been continuously in up state (i.e. reliable) until the first failure at TTF (time to failure).

This example encompasses all the cases which can be encountered.

5.4 Model and assumptions for non-repairable individual items

This applies both to individual items alone and individual items that are a part of a system. This is the simplest particular example which can be derived from Figure 5 because only two states have to be considered (see Figure 6 and Figure 7).

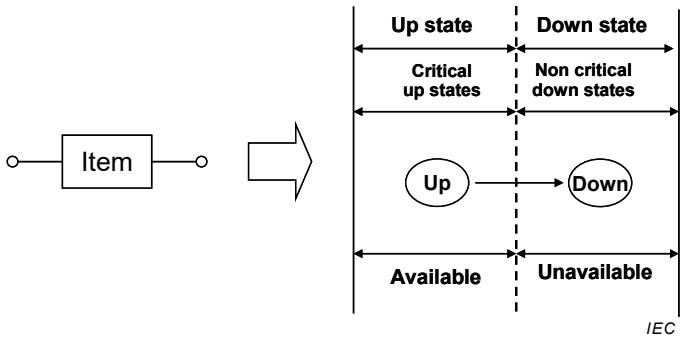

Figure 6 – State-transition diagram of a non-repairable individual item

At any instant of time, the non-repairable item will be either in:

– the up state from which the item can fail (i.e. goes to the down state) at time τ (time to failure);
– the down state where the item is failed and remains here for eternity.

Therefore in this simple case, the up state is also a critical up state and the down state is a non critical down state as no repair can occur. The behaviour of such an item is illustrated in Figure 7.

Documents
Document Sharing Hub

© Standards Australia Limited/Standards New Zealand 2020

Full document details: AS NZS IEC 61703-2020

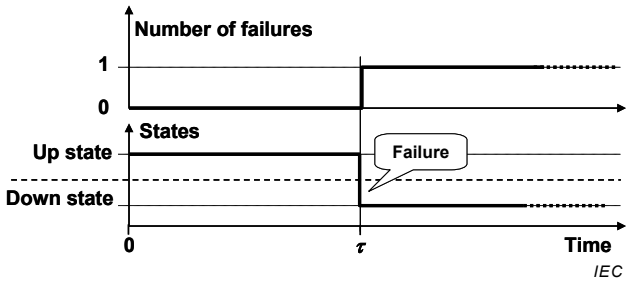

Key

τ Time to failure

Figure 7 – Sample realization of a non-repairable individual item

The number of observed failures, for this case, may be 0 or 1 and the number of repairs is equal to 0.

Unless otherwise stated, the assumptions used to derive the mathematical formulae are the following:

– When the item is in an up state, it is considered to be operating continuously.

NOTE The mathematical expressions given in 5.4 may not always be valid for IOIs.

– At time t = 0, the item is in an operating state, and is as good as new. Latent faults are not considered, which, if present, may invalidate some mathematical expressions.

– Preventive maintenance, or other planned actions that render the item incapable of performing a required function are not considered.

– The time to failure is a positive and continuous random variable with a probability density function and finite expectation.

5.5 Assumptions and model for repairable individual items

5.5.1 Assumption for repairable individual items

Unless otherwise stated, the assumptions used to derive the mathematical formulae are the following:

a) At time t = 0, the item is in an up state and as good as new. Therefore, $R(0) = A(0) = 1$. Latent faults are not considered.

b) When the item is in the up state, it is considered to be operating continuously.

c) Consecutive up times of the item are statistically independent, identically distributed, positive, continuous random variables with a common probability density function and finite expectation.

d) In the case of non-zero down-time duration, the consecutive down times of the item are statistically independent, identically distributed, positive, continuous random variables with a common probability density function and finite expectation.

e) The up times are statistically independent of the down times.

f) Preventive maintenance or other planned actions that render the item incapable of performing a required function are not considered.

g) Unless otherwise stated, other random variables (e.g. time to failure, repair time, logistic delay) considered in the standard, are positive and continuous random variables with probability density functions and finite expectations.

In summary:

– any transition from an up state to a down state is a failure;

– any transition from a down state to an up state is a restoration;

Documents
Document Sharing Hub

© Standards Australia Limited/Standards New Zealand 2020

Full document details: AS NZS IEC 61703-2020

– any down state is a fault and, in consequence, the down time is equal to the time to restoration;

– after each restoration an individual item is as good as new.

NOTE 1 With the last assumption, all mathematical expressions for the reliability measures relating to the time to failure of a non-repairable individual item can also be applied to each time to failure of a continuously operating repairable individual item.

NOTE 2 The components of a system are as good as new after restoration but the whole system becomes as good as new only when all the failed components have been restored.

5.5.2 Instantaneous repair

This applies both to individual items alone and individual items that are a part of a system and are independent of each other. This is another simple example which can be derived from Figure 5. Here also only two states have to be considered (see Figure 8 and Figure 9) but the down state is a zero-duration state because repairs are instantaneous.

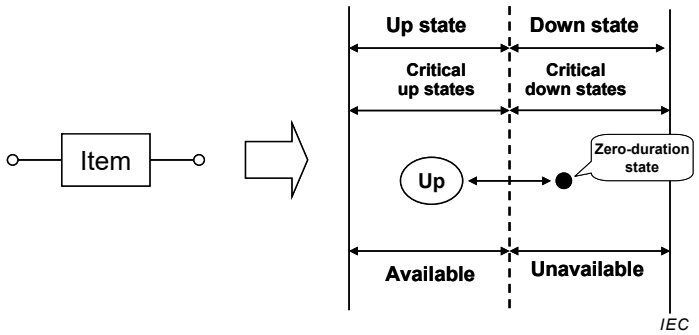

Figure 8 – State-transition diagram of an instantaneously repairable individual item

At any instant of time, the repairable item will be either in:

– the up state from which the item can fail (i.e. goes to the down state). In Figure 9, $S_{F,1}$, $S_{F,2}$, $S_{F,3}$ ... are instants of failure;

– the down state where the item is instantaneously repaired (i.e. goes to the up state). In Figure 9, $S_{F,1}$, $S_{F,2}$, $S_{F,3}$ ... are also instants of repairs.

The behaviour of such an item is illustrated in Figure 9. When the item is as good as new after repair, it can be modelled by a simple (ordinary) renewal process.

The repairable item being in up state at any instant of time, is available at any time. Therefore this model is mainly useful to count the number of failures occurring over a given time interval (see Figure 9).

When this approach is used to model an item without considering the times to restoration, the time considered in Figure 9 comprises only the operational times and this model allows to calculate the number of failures over a given accumulated duration of operational time.

When this approach is used to model an item where the times to restoration are small compared to the times to failures, the time considered in Figure 9 is the calendar time which encompasses both the operational and the restoration times. This calendar time overestimates the operational time and the calculated number of failures is conservative.

© Standards Australia Limited/Standards New Zealand 2020

Documents
Document Sharing Hub

Full document details: AS NZS IEC 61703-2020

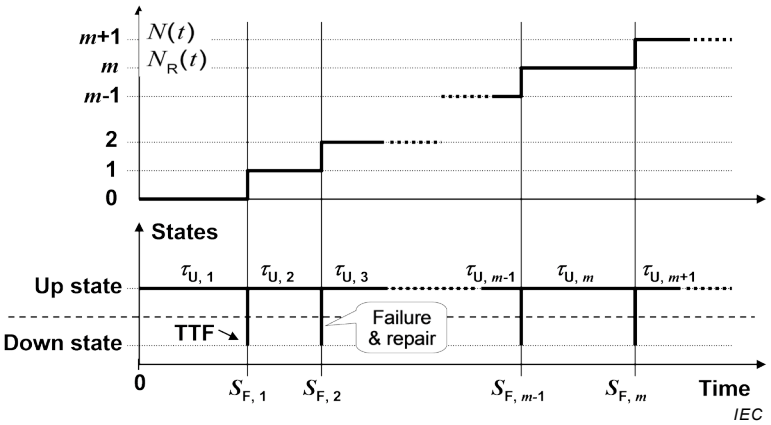

Key

$N(t)$	Number of failures during the time interval [0, t]
$N_R(t)$	Number of restorations during the time interval [0, t]
$S_{F,1}$, $S_{F,2}$, $S_{F,3}$	Consecutive instants of failure
$\tau_{U,1}$, $\tau_{U,2}$, $\tau_{U,3}$	Consecutive up times

Figure 9 – Sample realization of a repairable individual item with zero time to restoration

5.5.3 Non-instantaneous repair

This is the same case as in 5.5.2 except that the down state lasts for some time as the repairs are not instantaneous (see Figure 10 and Figure 11).

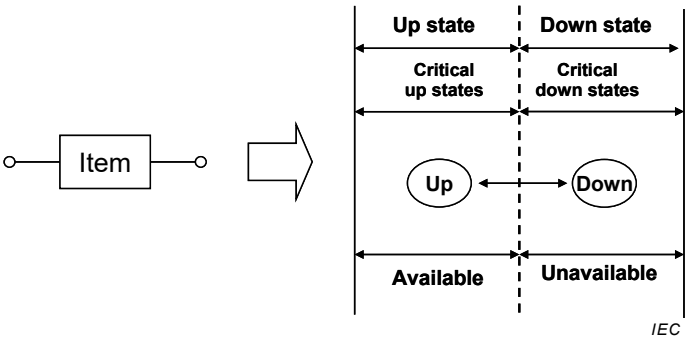

Figure 10 – State-transition diagram of a repairable individual item

At any instant of time, the repairable individual item will be either in:

– the up state from which the item can fail (i.e. can go to the down state). In Figure 11, $S_{F,1}$, $S_{F,2}$, $S_{F,3}$ ... are instants of failure;

– the down state where the item can be repaired (i.e. can go to the up state). In Figure 11, $S_{R,1}$, $S_{R,2}$, $S_{R,3}$ ... are instants of repairs;

The behaviour of such an item is illustrated in Figure 11. When the item is as good as new after repair it can be modelled by a simple (ordinary) alternating renewal process.

Documents
Document Sharing Hub
© Standards Australia Limited/Standards New Zealand 2020
Full document details: AS NZS IEC 61703-2020

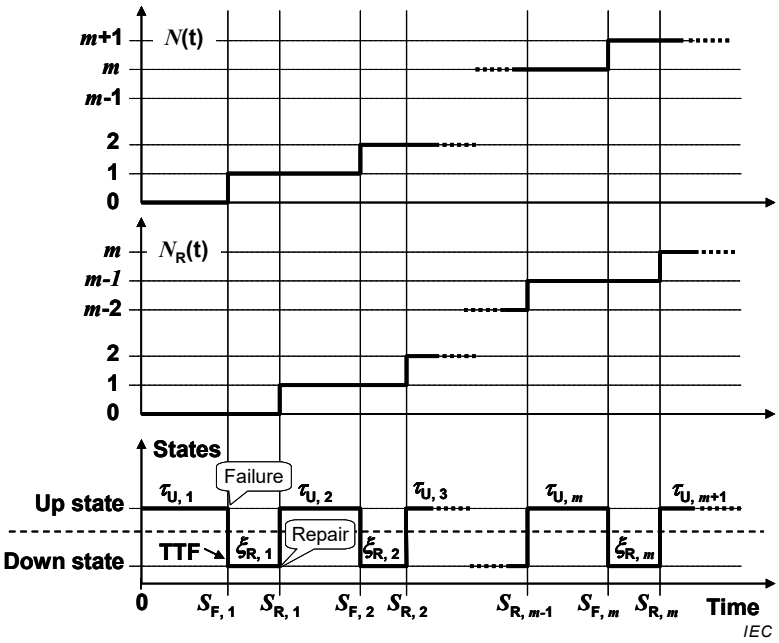

Key

$N(t)$	Number of failures during the time interval [0, t]
$N_R(t)$	Number of restorations during the time interval [0, t]
$S_{F,1}$, $S_{F,2}$, $S_{F,3}$	Consecutive instants of failure
$S_{R,1}$, $S_{R,2}$, $S_{R,3}$	Consecutive instants of restoration
$\tau_{U,1}$ $\tau_{U,2}$, $\tau_{U,3}$	Consecutive up times
$\xi_{R,1}$, $\xi_{R,2}$, $\xi_{R,3}$	Consecutive times to restoration

Figure 11 – Sample realization of a repairable individual item with non-zero time to restoration

5.6 Continuously operating items (COI) versus intermittently operating individual items (IOI)

For continuously operating items (COI), the up state is reduced to the operating state, and then the up time is equal to the operating time. For intermittently operating items (IOI), the up state class is split between several types of states: for example operating state [192-02-04], idle state [192-02-14], and stand-by state [192-02-10] (see Figure 12).

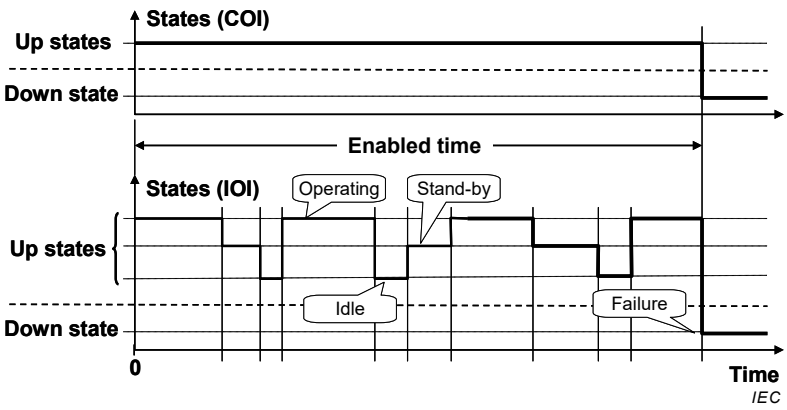

NOTE For COI, Enabled time = Operating time; for IOI, Enabled time = Operating time + Standby time + Idle time.

Figure 12 – Comparison of an enabled time for a COI and an IOI

© Standards Australia Limited/Standards New Zealand 2020

Documents
Document Sharing Hub

Full document details: AS NZS IEC 61703-2020

The expressions for reliability measures of continuously operating, repairable items may not be true for IOIs. Nevertheless, when it is assumed that the item cannot fail (i.e. go to the down state) when it is not in operating state, the expressions remain valid provided that the equivalent operating time is used as illustrated in Figure 13. If the item fails during non-operating states (e.g. idle or stand-by states), general stochastic processes like those presented in Figure 5 should be considered.

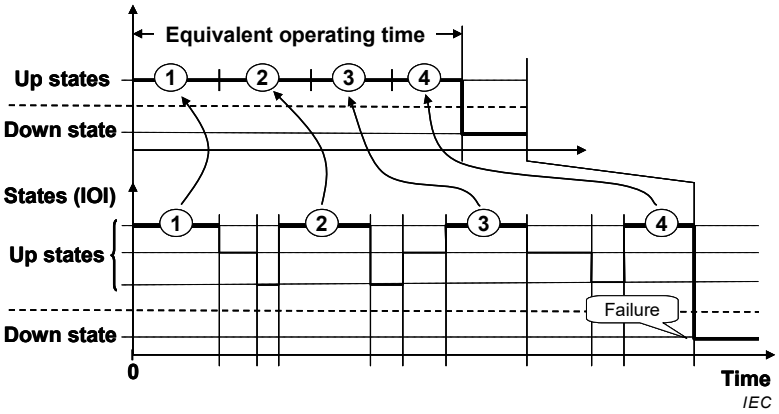

NOTE The equivalence illustrated is valid only if the item cannot fail during stand-by or idle positions.

Figure 13 – Equivalent operating time for IOI items

6 Mathematical models and expressions

6.1 Systems

6.1.1 General

The state graph drawn in Figure 14 will be used to explain the various terms. It models a system made of two redundant repairable components A and B. It comprises only 4 states: 3 up states of which 2 are critical and a single critical down state. This simple system is sufficient to illustrate the concepts of availability/unavailability, reliability/unreliability, failure rate, failure density and conditional and unconditional failure intensities.

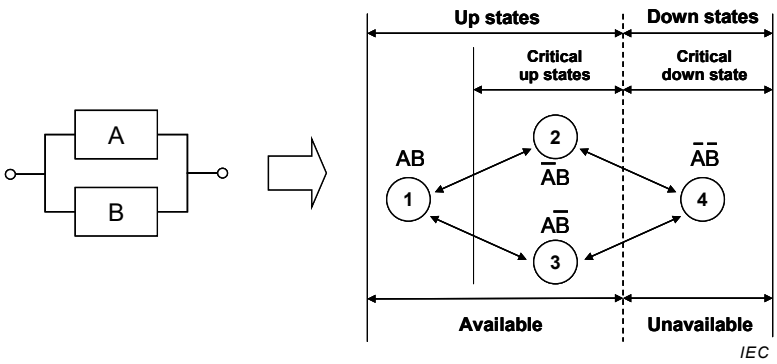

Figure 14 – State-transition graph for a simple redundant system

In this state-transition graph no assumptions are made about the rules of transition allowing the system to go at time t from a state, i, to another one, j. In the general case, this depends both on the states i and j but also on the time spent in the state i before the transition occurs and on the way the state i has been previously reached. Therefore, except in particular cases, there are generally no simple analytical expressions available and Monte Carlo simulation has to be implemented.

Documents
Document Sharing Hub
© Standards Australia Limited/Standards New Zealand 2020
Full document details: AS NZS IEC 61703-2020

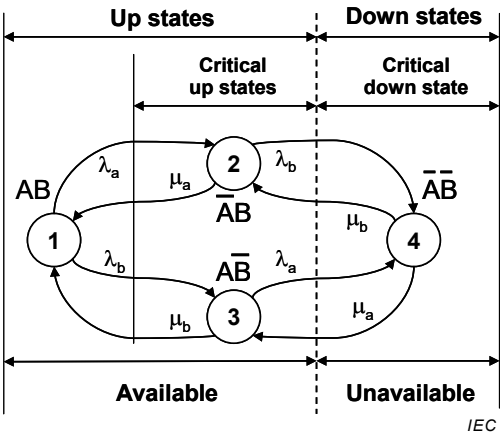

Figure 15 – Markov graph for a simple redundant system

Fortunately, the failure and repair rates of components can often be considered as reasonably constant and, the state-transition graph becomes a Markov graph [27] allowing analytical calculations. In this case the rules of transition from a state i to another one j are described by constant transition rates which depend only on the states i and j. Then, when the components A and B of the above example have constant failures (λ_a, λ_b) and repair rates (μ_a, μ_b), Figure 14 can be drawn as the Markov graph shown in Figure 15.

This Markov graph is used to derive mathematical expressions valid when the Markovian assumption is verified. Algorithms are available to calculate the probabilities of the various states. Figure 16 shows the typical evolution of the state probabilities when the time elapses. These curves have been drawn with the following parameters: λ_a = 2 year^{-1}, λ_b = 3 year^{-1} and $\mu_a = \mu_b$ = 10 year^{-1}.

The failure rates have been chosen high and the repair rates relatively low: this leads to a rather low availability but allows to clearly visualize the transient period before the asymptotic values are reached.

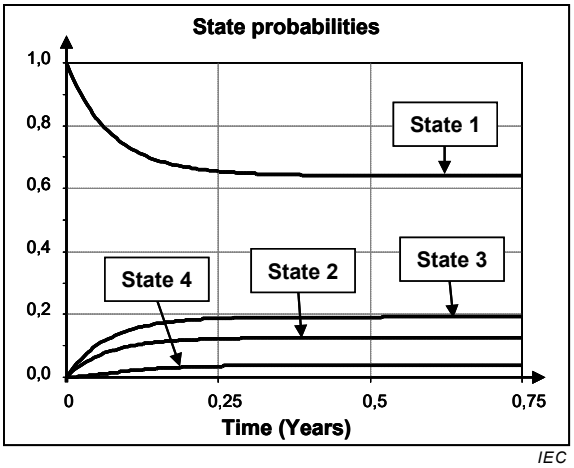

Figure 16 – Evolution of the state probabilities related to the Markov model in Figure 15

© Standards Australia Limited/Standards New Zealand 2020

Documents
Document Sharing Hub

Full document details: AS NZS IEC 61703-2020