AS/NZS IEC 62232:2023
IEC 62232:2022

STANDARDS NEW ZEALAND
TE MANA TAUTIKANGA O AOTEAROA

STANDARDS Australia

Australian/New Zealand Standard™

Determination of RF field strength, power density and SAR in the vicinity of base stations for the purpose of evaluating human exposure

AVA Documents
Document Sharing Hub

AS/NZS IEC 62232:2023

This Joint Australian/New Zealand Standard™ was prepared by Joint Technical Committee TE-007, Human Exposure to Electromagnetic Fields. It was approved on behalf of the Council of Standards Australia on 22 March 2023 and by the New Zealand Standards Approval Board on 05 April 2023.

This Standard was published on 5 May 2023.

The following are represented on Committee TE-007:

Association of Accredited Certification Bodies
Australian Centre for Radiofrequency Bioeffects Research
Australian Industry Group
Australian Mobile Telecommunications Association
Australian Radiation Protection and Nuclear Safety Agency
Commercial Radio Australia
Communications, Electrical and Plumbing Union — Electrical Division
Department of Defence (Australian Government)
Electrical Engineers Association of NZ
Engineers Australia
Kodia
Ministry of Health, NZ
National Measurement Institute
Victoria University, NZ
Vodafone NZ

This Standard was issued in draft form for comment as DR AS IEC 62232:2023.

Keeping Standards up-to-date

Ensure you have the latest versions of our publications and keep up-to-date about Amendments, Rulings, Withdrawals, and new projects by visiting:

www.standards.org.au

www.standards.govt.nz

ISBN 978 1 76139 140 8

Documents
Document Sharing Hub

Full document details: AS NZS IEC 62232-2023

Australian/New Zealand Standard™

Determination of RF field strength, power density and SAR in the vicinity of base stations for the purpose of evaluating human exposure

Originated as AS IEC 62232:2018.
Jointly revised and redesignated as AS/NZS IEC 62232:2023.

© ISO 2023 — All rights reserved
© Standards Australia Limited/the Crown in right of New Zealand, administered by the New Zealand Standards Executive 2023

All rights are reserved. No part of this work may be reproduced or copied in any form or by any means, electronic or mechanical, including photocopying, without the written permission of the publisher, unless otherwise permitted under the Copyright Act 1968 (Cth) or the Copyright Act 1994 (New Zealand).

Documents
Document Sharing Hub

Full document details: AS NZS IEC 62232-2023

Preface

This Standard was prepared by the Joint Standards Australia/Standards New Zealand Committee TE-007, Human Exposure to Electromagnetic Fields, to supersede AS IEC 62232:2018, *Determination of RF field strength, power density and SAR in the vicinity of radiocommunication base stations for the purpose of evaluating human exposure*.

The objective of this document is to provide methods for the determination of RF field strength, power density and specific absorption rate (SAR) in the vicinity of base stations (BS) for the purpose of evaluating human exposure.

This document —

(a) considers intentionally radiating BS which transmit on one or more antennas using one or more frequencies in the range 110 MHz to 300 GHz;

(b) considers the impact of ambient sources on RF exposure at least in the 100 kHz to 300 GHz frequency range;

(c) specifies the methods to be used for RF exposure evaluation for compliance assessment applications, namely —

  (i) product compliance — determination of compliance boundary information for a BS product before it is placed on the market;

  (ii) product installation compliance — determination of the total RF exposure levels in accessible areas from a BS product and other relevant sources before the product is put into operation; and

  (iii) *in situ* RF exposure assessment — measurement of *in situ* RF exposure levels in the vicinity of a BS installation after the product has been taken into operation;

(d) specifies how to perform RF exposure assessment based on the actual maximum approach;

(e) describes several RF field strengths, power density, and SAR measurement and computation methodologies with guidance on their applicability to address both the *in situ* evaluation of installed BS and laboratory-based evaluations;

(f) describes how surveyors establish their specific evaluation procedures appropriate for their evaluation purpose;

(g) provides guidance on how to report, interpret and compare results from different evaluation methodologies and, where the evaluation purpose requires it, determine a justified decision against a limit value; and

(h) provides methods for the RF exposure assessment of BS using time-varying beam-steering technologies such as new radio (NR) BS using massive multiple input multiple output (MIMO).

This document is identical with, and has been reproduced from, IEC 62232:2022, *Determination of RF field strength, power density and SAR in the vicinity of base stations for the purpose of evaluating human exposure*.

As this document has been reproduced from an International document, a full point substitutes for a comma when referring to a decimal marker.

Australian or Australian/New Zealand Standards that are identical adoptions of international normative references may be used interchangeably. Refer to the online catalogue for information on specific Standards.

Documents
Document Sharing Hub

© Standards Australia Limited/Standards New Zealand 2023

Full document details: AS NZS IEC 62232-2023

The terms “normative” and “informative” are used in Standards to define the application of the appendices or annexes to which they apply. A “normative” appendix or annex is an integral part of a Standard, whereas an “informative” appendix or annex is only for information and guidance.

Documents
Document Sharing Hub
© Standards Australia Limited/Standards New Zealand 2023
Full document details: AS NZS IEC 62232-2023

CONTENTS

FOREWORD 16
INTRODUCTION 18
1 Scope 19
2 Normative references 20
3 Terms and definitions 21
4 Symbols and abbreviated terms 36
4.1 Physical quantities 36
4.2 Constants 36
4.3 Abbreviated terms 36
5 How to use this document 39
5.1 Quick start guide 39
5.2 RF evaluation purpose categories 42
5.3 Implementation case studies 42
6 Evaluation processes for product compliance, product installation compliance and in-situ RF exposure assessments 42
6.1 Evaluation process for product compliance 42
6.1.1 General 42
6.1.2 Establishing compliance boundaries 42
6.1.3 Iso-surface compliance boundary definition 43
6.1.4 Simple compliance boundaries 43
6.1.5 Methods for establishing the compliance boundary 45
6.1.6 Uncertainty 49
6.1.7 Reporting for product compliance 49
6.2 Evaluation process used for product installation compliance 50
6.2.1 General 50
6.2.2 General evaluation procedure for product installations 50
6.2.3 Product installation compliance based on the actual maximum transmitted power or EIRP 52
6.2.4 Product installation data collection 55
6.2.5 Simplified product installation evaluation process 56
6.2.6 Assessment area selection 59
6.2.7 Measurements 60
6.2.8 Computations 62
6.2.9 Uncertainty 62
6.2.10 Reporting for product installation compliance 63
6.3 In-situ RF exposure evaluation or assessment process 64
6.3.1 General 64
6.3.2 In-situ measurement process 64
6.3.3 Site analysis 65
6.3.4 Case A evaluation 66
6.3.5 Case B evaluation 66
6.3.6 Uncertainty 67
6.3.7 Reporting 67
6.4 Averaging procedures 67
6.4.1 Spatial averaging 67
6.4.2 Time averaging 68
7 Determining the evaluation method 68

Documents
Document Sharing Hub

© Standards Australia Limited/Standards New Zealand 2023

Full document details: AS NZS IEC 62232-2023

7.1 Overview ... 68
7.2 Process to determine the evaluation method ... 68
7.2.1 General ... 68
7.2.2 Establishing the evaluation points in relation to the source-environment plane ... 69
7.2.3 Exposure metric selection ... 70
8 Evaluation methods ... 71
8.1 General ... 71
8.2 Measurement methods ... 72
8.2.1 General ... 72
8.2.2 RF field strength and power density measurements ... 72
8.2.3 SAR measurements ... 73
8.3 Computation methods ... 74
8.4 Methods for assessment based on actual maximum approach ... 76
8.4.1 General requirements ... 76
8.4.2 Actual transmitted power or EIRP monitoring ... 76
8.4.3 Actual transmitted power or EIRP control ... 77
8.5 Methods for the assessment of RF exposure to multiple sources ... 78
8.6 Methods for establishing the BS transmitted power or EIRP ... 79
9 Uncertainty ... 80
10 Reporting ... 80
10.1 General requirements ... 80
10.2 Report format ... 81
10.3 Opinions and interpretations ... 82
Annex A (informative) Source-environment plane and guidance on the evaluation method selection ... 83
A.1 Guidance on the source-environment plane ... 83
A.1.1 General ... 83
A.1.2 Source-environment plane example ... 83
A.1.3 Source regions ... 84
A.2 Select between computation or measurement approaches ... 90
A.3 Select measurement method ... 91
A.3.1 Selection stages ... 91
A.3.2 Selecting between RF field strength, power density and SAR measurement approaches ... 91
A.3.3 Selecting between broadband and frequency selective measurement ... 92
A.3.4 Selecting RF field strength measurement procedures ... 93
A.4 Select computation method ... 93
A.5 Additional considerations ... 95
A.5.1 Simplicity ... 95
A.5.2 Evaluation method ranking ... 95
A.5.3 Applying multiple methods for RF exposure evaluation ... 95
Annex B (normative) Evaluation methods ... 96
B.1 Overview ... 96
B.2 General ... 96
B.2.1 Coordinate systems and reference points ... 96
B.2.2 Variables ... 97
B.3 RF exposure evaluation principles ... 98
B.3.1 Simple calculation of RF field strength and power density ... 98

Documents
Document Sharing Hub

© Standards Australia Limited/Standards New Zealand 2023

Full document details: AS NZS IEC 62232-2023

B.3.2 Measurement of RF field strength and power density 102
B.3.3 Spatial averaging 104
B.3.4 Time averaging 107
B.3.5 Comparing measured and computed values 109
B.3.6 Personal RF monitors 109
B.4 RF field strength and power density measurements 109
B.4.1 Applicability of RF field strength and power density measurements 109
B.4.2 In-situ RF exposure measurements 109
B.4.3 Laboratory based RF field strength and power density measurements 121
B.4.4 RF field strength and power density measurement uncertainty 131
B.5 SAR measurements 136
B.5.1 Overview of SAR measurements 136
B.5.2 SAR measurement requirements 136
B.5.3 SAR measurement description 138
B.5.4 SAR measurement uncertainty 143
B.6 Basic computation methods 146
B.6.1 General 146
B.6.2 Basic computation formulas for RF field strength or power density evaluation 146
B.6.3 Basic whole-body SAR and peak spatial-average SAR evaluation formulas 153
B.6.4 Basic compliance boundary assessment method for BS using parabolic dish antennas 160
B.6.5 Basic compliance boundary assessment method for intentionally radiating cables 163
B.7 Advanced computation methods 164
B.7.1 General 164
B.7.2 Synthetic model and ray tracing algorithms 164
B.7.3 Full wave RF exposure computation 171
B.7.4 Full wave SAR computation 180
B.8 Extrapolation from the evaluated values to the maximum or actual values 185
B.8.1 Extrapolation method 185
B.8.2 Extrapolation to maximum in-situ RF field strength or power density using broadband measurements 187
B.8.3 Extrapolation to maximum in-situ RF field strength / power density using frequency or code selective measurements 187
B.8.4 Influence of traffic in real operating network 188
B.8.5 Extrapolation for massive MIMO and beamforming BS 189
B.8.6 Maximum exposure extrapolation with dynamic spectrum sharing (DSS) 191
B.9 Guidance for implementing the actual maximum approach 192
B.9.1 BS actual EIRP evaluation assumptions 192
B.9.2 Technology duty-cycle factor description 193
B.9.3 CDF evaluation using modelling studies 195
B.9.4 CDF evaluation using measurement studies on operational BS sites 196
B.9.5 Actual transmitted power or EIRP monitoring counters 198
B.9.6 Configurations with multiple transmitters 198
B.10 Transmitted power or EIRP evaluation 200
B.10.1 General 200
B.10.2 Measurement of the transmitted power in conducted mode 200
B.10.3 Measurement of the transmitted power in OTA conditions 201

AVA Documents
Document Sharing Hub

© Standards Australia Limited/Standards New Zealand 2023

Full document details: AS NZS IEC 62232-2023

B.10.4 Measurement of the EIRP in OTA and laboratory conditions 201
B.10.5 Measurement of the EIRP in OTA and in-situ conditions 202
Annex C (informative) Guidelines for the validation of power or EIRP control features and monitoring counter(s) related to the actual maximum approach 203
C.1 Overview 203
C.2 Guidelines for validating control feature(s) and monitoring counters 203
C.3 Validation of power or EIRP monitoring counter in laboratory conditions 204
C.3.1 Validation of power or EIRP monitoring counter in conducted mode – test procedure 204
C.3.2 Validation of power or EIRP monitoring counter in OTA mode – test procedure 206
C.3.3 Validation of control feature(s) in laboratory conditions 209
C.3.4 Validation of control features using in-situ measurements 212
C.4 Validation test report 214
C.5 Case studies 215
C.5.1 Case study A – In-situ validation 215
C.5.2 Case study B – In-situ validation 219
C.5.3 Case study C – In-situ validation 222
Annex D (informative) Rationale supporting simplified product installation criteria 227
D.1 General 227
D.2 Class E2 227
D.3 Class E10 228
D.4 Class E100 229
D.5 Class E+ 231
D.6 Simplified formulas for millimetre-wave antennas using massive MIMO or beam steering 232
Annex E (informative) Technology-specific exposure evaluation guidance 234
E.1 Overview to guidance on specific technologies 234
E.2 Summary of technology-specific information 234
E.3 Guidance on spectrum analyser settings 235
E.3.1 Overview of spectrum analyser settings 235
E.3.2 Detection algorithms 236
E.3.3 Resolution bandwidth and channel power processing 236
E.3.4 Integration per service 239
E.4 Stable transmitted power signals 239
E.4.1 TDMA/FDMA technology 239
E.4.2 WCDMA/UMTS technology 240
E.4.3 OFDM technology 241
E.5 WCDMA measurement and calibration using a code domain analyser 241
E.5.1 WCDMA measurements – General 241
E.5.2 WCDMA decoder characteristics 241
E.5.3 Calibration 242
E.6 Wi-Fi measurements 244
E.6.1 General 244
E.6.2 Integration time for reproducible measurements 245
E.6.3 Channel occupation 245
E.6.4 Some considerations 246
E.6.5 Measurement configuration and steps 246
E.6.6 Influence of the application layers 247

AVA Documents
Document Sharing Hub

© Standards Australia Limited/Standards New Zealand 2023

Full document details: AS NZS IEC 62232-2023

E.6.7 Power control ... 247
E.7 LTE measurements ... 248
E.7.1 Overview ... 248
E.7.2 LTE transmission modes ... 248
E.7.3 LTE-FDD frame structure ... 249
E.7.4 LTE-TDD frame structure ... 250
E.7.5 Maximum LTE exposure evaluation ... 252
E.7.6 Instantaneous LTE exposure evaluation ... 257
E.7.7 MIMO multiplexing of LTE BS ... 258
E.8 NR BS measurements ... 258
E.8.1 General ... 258
E.8.2 Maximum NR exposure evaluation ... 258
E.9 Establishing compliance boundaries using numerical simulations of MIMO array antennas emitting correlated waveforms ... 268
E.9.1 General ... 268
E.9.2 Field combining near base stations for correlated exposure with the purpose of establishing compliance boundaries ... 268
E.9.3 Numerical simulations of MIMO array antennas with densely packed columns ... 269
E.9.4 Numerical simulations of large MIMO array antennas ... 270
E.10 Massive MIMO antennas ... 270
E.10.1 Overview ... 270
E.10.2 Deterministic conservative approach ... 270
E.10.3 Statistical conservative approach ... 270
E.10.4 Example approaches ... 271
Annex F (informative) Guidelines for the assessment of BS compliance with ICNIRP-2020 brief exposure limits ... 288
F.1 General ... 288
F.2 Brief exposure limits ... 288
F.3 Implications of brief exposure limits on signal modulation and TDD duty cycle ... 290
F.4 Implications of brief exposure limits on the actual maximum approach ... 290
Annex G (informative) Uncertainty ... 294
G.1 Background ... 294
G.2 Requirement to estimate uncertainty ... 294
G.3 How to estimate uncertainty ... 295
G.4 Guidance on uncertainty and assessment schemes ... 295
G.4.1 General ... 295
G.4.2 Overview of assessment schemes ... 295
G.4.3 Examples of assessment schemes ... 296
G.4.4 Assessment schemes and compliance probabilities ... 299
G.5 Guidance on uncertainty ... 301
G.5.1 Overview ... 301
G.5.2 Measurement uncertainty and confidence levels ... 302
G.6 Applying uncertainty for compliance assessments ... 303
G.7 Example influence quantities for field measurements ... 304
G.7.1 General ... 304
G.7.2 Calibration uncertainty of measurement antenna or field probe ... 304
G.7.3 Frequency response of the measurement antenna or field probe ... 304
G.7.4 Isotropy of the measurement antenna or field probe ... 306

AVA Documents
Document Sharing Hub

© Standards Australia Limited/Standards New Zealand 2023

Full document details: AS NZS IEC 62232-2023

G.7.5 Frequency response of the spectrum analyser 306
G.7.6 Temperature response of a broadband field probe 306
G.7.7 Linearity deviation of a broadband field probe 307
G.7.8 Mismatch uncertainty 307
G.7.9 Deviation of the experimental source from numerical source 307
G.7.10 Meter fluctuation uncertainty for time-varying signals 307
G.7.11 Uncertainty due to power variation in the RF source 308
G.7.12 Uncertainty due to field gradients 308
G.7.13 Mutual coupling between measurement antenna or isotropic probe and object 309
G.7.14 Uncertainty due to field scattering from the surveyor's body 310
G.7.15 Measurement device 312
G.7.16 Fields out of measurement range 312
G.7.17 Noise 313
G.7.18 Integration time 313
G.7.19 Power chain 313
G.7.20 Positioning system 313
G.7.21 Matching between probe and the EUT 313
G.7.22 Drifts in output power of the EUT, probe, temperature, and humidity 313
G.7.23 Perturbation by the environment 313
G.8 Example influence quantities for RF field strength computations by ray tracing or full wave methods 314
G.8.1 General 314
G.8.2 System 314
G.8.3 Technique uncertainties 315
G.8.4 Environmental uncertainties 315
G.9 Influence quantities for SAR measurements 316
G.9.1 General 316
G.9.2 Post-processing 316
G.9.3 EUT holder 316
G.9.4 EUT positioning 317
G.9.5 Phantom shell uncertainty 318
G.9.6 SAR correction depending on target liquid permittivity and conductivity 318
G.9.7 Liquid permittivity and conductivity measurements 319
G.9.8 Liquid temperature 319
G.10 Influence quantities for SAR calculations 319
G.11 Spatial averaging 319
G.11.1 General 319
G.11.2 Small-scale fading variations 320
G.11.3 Error on the estimation of local average power density 321
G.11.4 Characterization of environment statistical properties 322
G.11.5 Characterization of different spatial averaging schemes 322
G.12 Influence of human body on measurements of the electric RF field strength 327
G.12.1 Simulations of the influence of human body on measurements based on the method of moments (surface equivalence principle) 327
G.12.2 Comparison with measurements 329
G.12.3 Conclusions 330
Annex H (informative) Guidance on comparing evaluated parameters with a limit value 331
H.1 Overview 331

AVA Documents
Document Sharing Hub

© Standards Australia Limited/Standards New Zealand 2023

Full document details: AS NZS IEC 62232-2023

H.2 Information recommended to compare evaluated value against limit value 331
H.3 Performing a limit comparison at a given confidence level 331
H.4 Performing a limit comparison using a process-based assessment scheme 332
Bibliography 333

Figure 1 – Quick start guide to the evaluation process 40
Figure 2 – Example of iso-surface compliance boundary 43
Figure 3 – Example of cylindrical and half-pipe compliance boundaries 44
Figure 4 – Example of box shaped compliance boundary 45
Figure 5 – Example of truncated box shaped compliance boundary 45
Figure 6 – Example illustrating the linear scaling procedure 46
Figure 7 – Example of massive MIMO antenna and corresponding beams and envelope patterns 48
Figure 8 – Example of compliance boundary shape for BS antennas with beam steering 48
Figure 9 – Example of dish antenna compliance boundary 49
Figure 10 – Flowchart describing the product installation evaluation process 51
Figure 11 – Example of a CDF curve representing the normalized actual transmitted power or EIRP 53
Figure 12 – Flow chart for product installation compliance based on the actual maximum transmitted power or EIRP threshold(s) 55
Figure 13 – Simplified compliance assessment process using installation classes 56
Figure 14 – Example of DI within a square-shaped assessment domain boundary (ADB) with dimension L_{ADB} 60
Figure 15 – In-situ RF exposure evaluation or assessment process flow chart 65
Figure 16 – Source-environment plane concept 69
Figure 17 – Flow chart of the measurement methods 72
Figure 18 – Flow chart of the relevant computation methods 75
Figure 19 – Example of segments used for monitoring and control of BS using mMIMO or beam steering 77
Figure A.1 – Example source-environment plane regions near a base station antenna on a tower 83
Figure A.2 – Example source-environment plane regions near a roof-top antenna that has a narrow vertical (elevation plane) beamwidth (not to scale) 84
Figure A.3 – Geometry of an antenna with largest linear dimension L_{eff} and largest end dimension L_{end} 85
Figure A.4 – Maximum path difference for an antenna with largest linear dimension L 89
Figure B.1 – Cartesian, cylindrical and spherical coordinate systems relative to the BS antenna (view from the rear panel) 97
Figure B.2 – Typical RF exposure assessment case 99
Figure B.3 – Reflection due to the presence of a ground plane 100
Figure B.4 – Reflections due to the presence of internal walls of the housing and surrounding asphalt and soil configuring a base station installed underground 101
Figure B.5 – General representation of RF field strength or power density measurements 102
Figure B.6 – Practical examples of measurement equipment installation 103

Documents
Document Sharing Hub

© Standards Australia Limited/Standards New Zealand 2023

Full document details: AS NZS IEC 62232-2023

Figure B.7 – Spatial averaging schemes relative to walking or standing surface and in the vertical plane oriented to offer maximum area in the direction of the source being evaluated 105

Figure B.8 – Spatial averaging relative to spatial-peak field strength point height 107

Figure B.9 – Evaluation locations 119

Figure B.10 – Relationship of separation of remote radio source and evaluation area to separation of evaluation points 120

Figure B.11 – Outline of the surface scanning methodology 123

Figure B.12 – Block diagram of the antenna measurement system 124

Figure B.13 – Minimum radius constraint, where a denotes the minimum radius of a sphere, centred at the reference point, that encompasses the EUT 125

Figure B.14 – Maximum angular sampling spacing constraint 125

Figure B.15 – Outline of the volume/surface scanning methodology 128

Figure B.16 – Block diagram of typical near-field EUT measurement system 129

Figure B.17 – Examples of positioning of the EUT relative to the relevant phantom 136

Figure B.18 – Phantom liquid volume and measurement volume used for whole-body SAR measurements with the box-shaped phantoms 143

Figure B.19 – Reference frame employed for cylindrical formulas for RF field strength computation at a point P (left), and on a line perpendicular to boresight (right) 147

Figure B.20 – Views illustrating the three valid zones for field strength computation around an antenna 149

Figure B.21 – Enclosed cylinder around collinear array antennas, with and without electrical downtilt 150

Figure B.22 – Spherical formulas reference results 153

Figure B.23 – Cylindrical formulas reference results 153

Figure B.24 – Directions for which SAR estimation expressions are provided 154

Figure B.25 – Description of SAR estimation formulas physical parameters 155

Figure B.26 – Flow chart for the simplified assessment of RF compliance boundary in the line of sight of a parabolic dish antenna 162

Figure B.27 – Radiating cable geometry 163

Figure B.28 – Synthetic model and ray tracing algorithms geometry and parameters 167

Figure B.29 – Line 4 far-field positions for synthetic model and ray tracing validation example 169

Figure B.30 – Antenna parameters for synthetic model and ray tracing algorithms validation example 170

Figure B.31 – Generic 900 MHz BS antenna with nine dipole radiators 177

Figure B.32 – Line 1, 2 and 3 near-field positions for full wave and ray tracing validation 178

Figure B.33 – Generic 1 800 MHz BS antenna with five slot radiators 179

Figure B.34 – BS antenna placed in front of a multi-layered lossy cylinder 185

Figure B.35 – Time variation over 24 h of the exposure induced by NR, GSM and FM, each normalized to the mean value 189

Figure B.36– Generic structure of a base station transmitted RF signal frame 194

Figure B.37 – Example of setup for the direct power level measurement for BS equipped with direct access conducted output ports 201

Figure C.1 – Example of a laboratory test setup for validation of an actual power control feature intended for use with a 5G BS 210

Documents
Document Sharing Hub

© Standards Australia Limited/Standards New Zealand 2023

Full document details: AS NZS IEC 62232-2023

Figure C.2 – Example of a test setup for validation of an actual power control feature implemented in a 5G BS 213

Figure C.3 – Ground based in-situ validation setup 216

Figure C.4 – In-situ validation measurement setup near the general public compliance boundary in front of the 5G massive MIMO antenna (bore sight position) 217

Figure C.5 – Comparison between measured time-averaged EMF and power control feature (5G counter data) for the ground-based measurements 218

Figure C.6 – Measured exposure adaptation in time expressed as a percentage of ICNIRP limits [1], [2] for the measurements near the general public compliance boundary 218

Figure C.7 – Overview of the measurement site 220

Figure C.8 – Ground view of the validation site and measurement setup, located 60 m from the 5G BS, in the line of sight 221

Figure C.9 – Power transmitted by the massive MIMO antenna (top trace), channel power (ChP) measurements (middle trace) and transmitted resource blocks (RBs) (bottom trace) 221

Figure C.10 – Overview of the test platform 223

Figure C.11 – Example of synthetic model simulation of the test area 223

Figure C.12 – Examples of traffic load profiles 223

Figure C.13 – Example of testing in different segments in the test area 224

Figure C.14 – Results of the monitoring validation and baseline test in phase 1 225

Figure C.15 – Example of power density measurements and power density derived from counters 225

Figure C.16 – Measured power density and power density derived from counters 226

Figure C.17 – Comparisons of both counters and measurements 226

Figure D.1 – Measured ER as a function of distance for a BS (G = 5 dBi, f = 2 100 MHz) transmitting with an EIRP of 2 W (installation class E2) and 10 W (installation class E10) 227

Figure D.2 – Minimum installation height as a function of transmitting power corresponding to installation class E10 228

Figure D.3 – Compliance distance in the main lobe as a function of EIRP established in accordance with the far-field formula corresponding to installation class E100 229

Figure D.4 – Minimum installation height as a function of transmitting power corresponding to installation class E100 230

Figure D.5 – Averaged power density at ground level for various installation configurations of equipment with 100 W EIRP (installation class E100) 231

Figure D.6 – Compliance distance in the main lobe CD_m as a function of EIRP established in accordance with the far-field formula corresponding to installation class E+ 232

Figure D.7 – Minimum installation height h_m as a function of EIRP corresponding to installation class E+ 232

Figure D.8 – Power density distribution in watts per square metre in a vertical cut plane for an 8 × 8 antenna array at 28 GHz (grid step of 10 cm) 233

Figure D.9 – Power density distribution in watts per square metre in a vertical cut plane for an 8 × 8 antenna array at 39 GHz (grid step of 10 cm) 233

Figure E.1 – Spectral occupancy for GMSK 237

Figure E.2 – Spectral occupancy for CDMA 238

Figure E.3 – Channel allocation for a WCDMA signal 241

Figure E.4 – Example of Wi-Fi frames 241

Documents
Document Sharing Hub

© Standards Australia Limited/Standards New Zealand 2023

Full document details: AS NZS IEC 62232-2023

Figure E.5 – Channel occupation versus the integration time for IEEE 802.11b standard 245

Figure E.6 – Channel occupation versus nominal throughput rate for IEEE 802.11b/g standards 246

Figure E.7 – Wi-Fi spectrum trace snapshot 246

Figure E.8 – Frame structure of transmission signal for LTE-FDD downlink 250

Figure E.9 – Frame structure LTE-TDD type 2 (for 5 ms switch-point periodicity) 251

Figure E.10 – Frame structure of transmission signal for LTE-TDD 251

Figure E.11 – LTE-TDD PBCH measurement example 254

Figure E.12 – Example of VBW setting for LTE-FDD and LTE-TDD to avoid underestimation 255

Figure E.13 – Examples of received waves from LTE-FDD downlink signals using a spectrum analyser using zero span mode 256

Figure E.14 – LTE-TDD PBCH measurement example spectrum analyser using zero span mode 257

Figure E.15 – Example of VBW setting for NR to avoid underestimation 261

Figure E.16 – Examples of measurement accuracy results according to the ratio of VBW and RBW for NR SCS 30 kHz and 1 MHz RBW using various SA types (A to D) 261

Figure E.17 – Waterfall reconstruction plot of a 1 s long measurement trace of an NR signal with subcarrier spacing (SCS) 30 kHz (along one component of the electric field) 262

Figure E.18 – Example of NR signal frame measured on SA with SSB signal above PDSCH (data) 262

Figure E.19 – Example of NR signal frame measured on SA with SSB signal below or equal to PDSCH (data) 263

Figure E.20 – Time gating of SS burst signal 264

Figure E.21 – Representation of the channel bandwidth (CBW) 264

Figure E.22 – An example for one port CSI-RS beam design 267

Figure E.23 – Plan view representation of statistical conservative model 273

Figure E.24 – Binomial cumulative probability function for N = 24, PR = 0,125 281

Figure E.25 – Binomial cumulative probability function for N = 18, PR = 2/7 281

Figure E.26 – Binomial cumulative probability function for N = 100, PR = 0,125 285

Figure E.27 – Binomial cumulative probability function for N = 82, PR = 2/7 285

Figure F.1 – Limits for brief exposure (t < 360 s), seeTable F.1, divided by the corresponding time interval t and normalized with the value obtained for t up to 360 s 289

Figure F.2 – F_{PR_min} as a function of the pulse duration assuming a whole-body averaging time of 30 min 293

Figure F.3 – F_{PR_min} as a function of the pulse duration assuming an averaging time of 6 min 293

Figure G.1 – Examples of general assessment schemes 297

Figure G.2 – Target uncertainty scheme overview 298

Figure G.3 – Probability of the true value being above (respectively below) the evaluated value depending on the confidence level assuming a normal distribution 302

Figure G.4 – Plot of the calibration factors for E (not E^2) provided from an example calibration report for an electric field probe 305

Figure G.5 – Computational model used for the variational analysis of reflected RF fields from the front of a surveyor 311

Figure G.6 – EUT positioning equipment and different positioning errors 317

AVA Documents
Document Sharing Hub

© Standards Australia Limited/Standards New Zealand 2023

Full document details: AS NZS IEC 62232-2023

Figure G.7 – Physical model of small-scale fading variations 320
Figure G.8 – Example of E-field strength variations in line of sight of an antenna operating at 2,2 GHz 320
Figure G.9 – Error at 95 % on average power estimation 321
Figure G.10 – 343 measurement points building a cube (centre) and different templates consisting of a different number of positions 323
Figure G.11 – Moving a template (Line 3) through the cube 324
Figure G.12 – Standard deviations for GSM 900, DCS 1800 and UMTS 326
Figure G.13 – Simulation arrangement 328
Figure G.14 – Body influence 328
Figure G.15 – Simulation arrangement 329

Table 1 – Quick start guide evaluation steps 41
Table 2 – Example of product installation classes where a simplified evaluation process is applicable (based on ICNIRP general public limits [1] and [2]) 57
Table 3 – Exposure metrics validity for evaluation points in each source region 71
Table 4 – Requirements for RF field strength and power density measurements 73
Table 5 – Whole-body SAR exclusions based on RF power levels 73
Table 6 – Requirements for SAR measurements 74
Table 7 – Applicability of computation methods for source-environment regions of Figure 16 75
Table 8 – Requirements for computation methods 75
Table A.1 – Definition of source regions 86
Table A.2 – Default source region boundaries 86
Table A.3 – Source region boundaries for antennas with maximum dimension less than 2,5 λ 87
Table A.4 – Source region boundaries for linear/planar antenna arrays with a maximum dimension greater than or equal to 2,5 λ 87
Table A.5 – Source region boundaries for equiphase radiation aperture (e.g. dish) antennas with maximum reflector dimension much greater than a wavelength 88
Table A.6 – Source region boundaries for radiating cables 88
Table A.7 – Far-field distance r measured in metres as a function of angle β 90
Table A.8 – Guidance on selecting between computation and measurement approaches 91
Table A.9 – Guidance on selecting between broadband and frequency selective measurement 92
Table A.10 – Guidance on selecting RF field strength measurement procedures 93
Table A.11 – Guidance on selecting computation methods 94
Table A.12 – Guidance on specific evaluation method ranking 95
Table B.1 – Dimension variables 97
Table B.2 – RF power variables 97
Table B.3 – Antenna variables 98
Table B.4 – Exposure metric variables 98
Table B.5 – Broadband measurement system minimum requirements 111
Table B.6 – Frequency selective measurement system minimum requirements 112

Documents
Document Sharing Hub

© Standards Australia Limited/Standards New Zealand 2023

Full document details: AS NZS IEC 62232-2023

Table B.7 – Example template for estimating the expanded uncertainty of an in-situ RF field strength measurement that used a frequency selective equipment 132

Table B.8 – Example template for estimating the expanded uncertainty of an in-situ RF field strength measurement that used a broadband equipment 133

Table B.9 – Example template for estimating the expanded uncertainty of a laboratory-based RF field strength or power density measurement using the surface scanning method 134

Table B.10 – Example template for estimating the expanded uncertainty of a laboratory-based RF field strength or power density measurement using the volume scanning method 135

Table B.11 – Numerical reference SAR values for reference dipoles and flat phantom – All values are normalized to a forward power of 1 W 140

Table B.12 – Phantom liquid volume and measurement volume used for whole-body SAR measurements [61], [77] 143

Table B.13 – Correction factor to compensate for a possible bias in the obtained general public whole-body SAR when assessed using the large box-shaped phantom for child exposure configurations [72] 143

Table B.14 – Measurement uncertainty evaluation template for EUT whole-body SAR test 144

Table B.15 – Measurement uncertainty evaluation template for whole-body SAR system validation 145

Table B.16 – Definition of boundaries for selecting the zone of computation 149

Table B.17 – Input parameters for cylindrical and spherical formulas validation 152

Table B.18 – Applicability of SAR estimation formulas 154

Table B.19 – Calculation of $A(f, d)$ 157

Table B.20 – Antenna parameters for SAR estimation formulas verification 159

Table B.21 – Verification data for SAR estimation formulas – front 159

Table B.22 – Verification data for SAR estimation formulas – axial and back 159

Table B.23 – Example template for estimating the expanded uncertainty of a synthetic model and ray tracing RF field strength computation 168

Table B.24 – Synthetic model and ray tracing power density reference results 171

Table B.25 – Example template for estimating the expanded uncertainty of a full wave RF field strength / power density computation 176

Table B.26 – Validation 1 full wave field reference results 178

Table B.27 – Validation 2 full wave field reference results 179

Table B.28 – Example template for estimating the expanded uncertainty of a full wave SAR computation 183

Table B.29 – Validation reference SAR results for computation method 185

Table B.30 – Relevant parameters for performing RF exposure modelling studies of a massive MIMO site or site cluster 195

Table B.31 – Measurement campaign parameters for performing RF exposure assessment of a massive MIMO site or site cluster 197

Table B.32 – Power combination factors applicable to the normalized actual transmitted power CDF in case of combination of multiple independent identical transmitters 199

Table B.33 – Power combination factors applicable to two independent transmitters with a ratio p in amplitude 200

Table C.1 – Relative difference between the measured averaged transmitted power and actual power counter value for systems that allow direct power level measurements 204

Documents
Document Sharing Hub

© Standards Australia Limited/Standards New Zealand 2023

Full document details: AS NZS IEC 62232-2023

Table C.2 – Correlation between the configured maximum power level and the level reported by actual power counters for BS that allow direct power level measurements 205

Table C.3 – Correlation between the configured time-averaged load levels and the actual power counter value for systems that allow direct power level measurements 205

Table C.4 – Relative difference between the configured maximum power, measured averaged transmitted power, and actual power counters for systems that do not support direct power level measurements 206

Table C.5 – Correlation between the configured power level and the level reported by power counters for BS that do not support direct power level measurements 207

Table C.6 – Correlation between time linearity of the configured maximum power level and the level reported by actual power counters for BS that do not support direct power level measurements 209

Table E.1 – Technology specific information 234

Table E.2 – Example of spectrum analyser settings for an integration per service 239

Table E.3 – Example constant power components for specific TDMA/FDMA technologies 240

Table E.4 – WCDMA decoder characteristics 242

Table E.5 – Signal configurations 242

Table E.6 – WCDMA generator setting for power linearity 243

Table E.7 – WCDMA generator setting for decoder calibration 243

Table E.8 – WCDMA generator setting for reflection coefficient measurement 244

Table E.9 – Uplink-downlink configurations 252

Table E.10 – Theoretical extrapolation factor, N_{RS}, based on frame structure given in 3GPP TS 36.104 [21] 253

Table E.11 – F_{BW} for each combination of BS channel bandwidth and SSB subcarrier spacing (SCS) for sub-6 GHz signals 259

Table E.12 – F_{BW} for each combination of BS channel bandwidth and SSB subcarrier spacing (SCS) for mm-wave signals 260

Table E.13 – List of variables in the case study 284

Table F.1 – Brief exposure limits for the general public integrated over intervals of between 0 min and 6 min as specified by ICNIRP-2020 [1] 289

Table F.2 – Minimum F_{PR}, F_{PR_min}, for which compliance with the time-averaged whole-body limits ICNIRP-2020 [1] inherently ensures compliance with the brief exposure limits specified by ICNIRP-2020 [1] 293

Table G.1 – Determining target uncertainty 298

Table G.2 – Monte Carlo simulation of 10 000 trials, both surveyor and auditor using best estimate 300

Table G.3 – Monte Carlo simulation of 10 000 trials, both surveyor and auditor using target uncertainty of 4 dB 300

Table G.4 – Monte Carlo simulation of 10 000 trials where surveyor uses upper 95 % CI and auditor uses lower 95 % CI 301

Table G.5 – Guidance on minimum separation distances for some dipole lengths such that the uncertainty does not exceed 5 % or 10 % in a measurement of E 309

Table G.6 – Guidance on minimum separation distances for some loop diameters such that the uncertainty does not exceed 5 % or 10 % in a measurement of H 309

Table G.7 – Example minimum separation conditions for selected dipole lengths for 10 % uncertainty in E 310

Table G.8 – Standard estimates of dB variation for the perturbations in front of a surveyor due to body reflected fields as described in Figure G.5 312

Documents
Document Sharing Hub

© Standards Australia Limited/Standards New Zealand 2023

Full document details: AS NZS IEC 62232-2023

Table G.9 – Standard uncertainty (u) estimates for E and H due to body reflections from the surveyor for common radio services derived from estimates provided in Table G.8 312

Table G.10 – Maximum sensitivity coefficients for liquid permittivity and conductivity over the frequency range 300 MHz to 6 GHz 319

Table G.11 – Uncertainty at 95 % for different fading models 322

Table G.12 – Correlation coefficients for GSM 900 and DCS 1800 325

Table G.13 – Variations of the standard deviations for the GSM 900, DCS 1800 and UMTS frequency bands 326

Table G.14 – Examples of total uncertainty calculation 327

Table G.15 – Maximum simulated error due to the influence of a human body on the measurement values of an omnidirectional probe 329

Table G.16 – Measured influence of a human body on omnidirectional probe measurements 329

Documents
Document Sharing Hub

© Standards Australia Limited/Standards New Zealand 2023

Full document details: AS NZS IEC 62232-2023

INTERNATIONAL ELECTROTECHNICAL COMMISSION

DETERMINATION OF RF FIELD STRENGTH, POWER DENSITY AND SAR IN THE VICINITY OF BASE STATIONS FOR THE PURPOSE OF EVALUATING HUMAN EXPOSURE

FOREWORD

1) The International Electrotechnical Commission (IEC) is a worldwide organization for standardization comprising all national electrotechnical committees (IEC National Committees). The object of IEC is to promote international co-operation on all questions concerning standardization in the electrical and electronic fields. To this end and in addition to other activities, IEC publishes International Standards, Technical Specifications, Technical Reports, Publicly Available Specifications (PAS) and Guides (hereafter referred to as "IEC Publication(s)"). Their preparation is entrusted to technical committees; any IEC National Committee interested in the subject dealt with may participate in this preparatory work. International, governmental and non-governmental organizations liaising with the IEC also participate in this preparation. IEC collaborates closely with the International Organization for Standardization (ISO) in accordance with conditions determined by agreement between the two organizations.
2) The formal decisions or agreements of IEC on technical matters express, as nearly as possible, an international consensus of opinion on the relevant subjects since each technical committee has representation from all interested IEC National Committees.
3) IEC Publications have the form of recommendations for international use and are accepted by IEC National Committees in that sense. While all reasonable efforts are made to ensure that the technical content of IEC Publications is accurate, IEC cannot be held responsible for the way in which they are used or for any misinterpretation by any end user.
4) In order to promote international uniformity, IEC National Committees undertake to apply IEC Publications transparently to the maximum extent possible in their national and regional publications. Any divergence between any IEC Publication and the corresponding national or regional publication shall be clearly indicated in the latter.
5) IEC itself does not provide any attestation of conformity. Independent certification bodies provide conformity assessment services and, in some areas, access to IEC marks of conformity. IEC is not responsible for any services carried out by independent certification bodies.
6) All users should ensure that they have the latest edition of this publication.
7) No liability shall attach to IEC or its directors, employees, servants or agents including individual experts and members of its technical committees and IEC National Committees for any personal injury, property damage or other damage of any nature whatsoever, whether direct or indirect, or for costs (including legal fees) and expenses arising out of the publication, use of, or reliance upon, this IEC Publication or any other IEC Publications.
8) Attention is drawn to the Normative references cited in this publication. Use of the referenced publications is indispensable for the correct application of this publication.
9) Attention is drawn to the possibility that some of the elements of this IEC Publication may be the subject of patent rights. IEC shall not be held responsible for identifying any or all such patent rights.

IEC 62232 has been prepared by IEC technical committee 106: Methods for the assessment of electric, magnetic and electromagnetic fields associated with human exposure. It is an International Standard.

This third edition cancels and replaces the second edition published in 2017. This edition constitutes a technical revision.

This edition includes the following significant technical changes with respect to the previous edition:

a) increased frequency range, from 110 MHz to 300 GHz (including consideration of ambient sources from 100 kHz to 300 GHz);
b) specification of assessment procedures based on the actual maximum approach including methods for the validation of monitoring counter and control features;
c) introduction of assessment methods relevant to 5G technologies and BS using beam-steering such as massive MIMO systems;
d) clarification of criteria for exposure from multiple sources;

Documents
Document Sharing Hub

© Standards Australia Limited/Standards New Zealand 2023

Full document details: AS NZS IEC 62232-2023

e) restructuring of Annex B (Evaluation methods) for better readability;

f) update of the requirements and procedures for power density measurements in laboratory conditions;

g) update of simplified assessment formulas for dish antennas used in radio relays and microwave links;

h) compatibility with ICNIRP-2020 [1][1] exposure limits.

This document contains attached files that are cited in Figure B.30 and G.4.4.3. These files can be downloaded from https://www.iec.ch/tc106/supportingdocuments.

The text of this International Standard is based on the following documents:

Draft	Report on voting
106/576/FDIS	106/590/RVD

Full information on the voting for its approval can be found in the report on voting indicated in the above table.

The language used for the development of this International Standard is English.

This document was drafted in accordance with ISO/IEC Directives, Part 2, and developed in accordance with ISO/IEC Directives, Part 1 and ISO/IEC Directives, IEC Supplement, available at www.iec.ch/members_experts/refdocs. The main document types developed by IEC are described in greater detail at http://www.iec.ch/standardsdev/publications.

The committee has decided that the contents of this document will remain unchanged until the stability date indicated on the IEC website under webstore.iec.ch in the data related to the specific document. At this date, the document will be

- reconfirmed,
- withdrawn,
- replaced by a revised edition, or
- amended.

IMPORTANT – The "colour inside" logo on the cover page of this document indicates that it contains colours which are considered to be useful for the correct understanding of its contents. Users should therefore print this document using a colour printer.

[1] Numbers in square brackets refer to the Bibliography.

Documents
Document Sharing Hub

© Standards Australia Limited/Standards New Zealand 2023

Full document details: AS NZS IEC 62232-2023

INTRODUCTION

This document addresses the evaluation of RF field strength, power density and specific absorption rate (SAR) levels in the vicinity of base stations (BS), also called products or equipment under test (EUT), intentionally radiating in the radio frequency (RF) range 110 MHz to 300 GHz in accordance with the scope, see Clause 1. It does not address the evaluation of current density.

RF exposure evaluation methods to be used for product compliance, product installation compliance and in-situ RF exposure assessments are specified in this document. Exposure limits are not specified in this document. The entity conducting RF exposure assessments refers to the set of exposure limits applicable where exposure takes place. Examples of applicable exposure limits considered in this document are provided in the Bibliography, for example ICNIRP-2020 [1], ICNIRP-1998 [2], IEEE Std C95.1™-2019 [3] and Safety Code 6 [4].

NOTE In this document, "ICNIRP" used without "-1998 or "-2020" applies to both [1] and [2].

This document is based on IEC 62232:2017 leveraging guidelines and lessons learned from the implementation guide IEC TR 62669:2019 [5]. In particular, it specifies how to implement the actual maximum approach.

Clause 2, Clause 3 and Clause 4 address normative references, terms and definitions, symbols, and abbreviated terms, respectively.

Clause 5 provides advice on how to use this document, including a quick-start guide.

Clause 6 describes the three main application areas of this document: RF exposure evaluation methods for product compliance, product installation compliance, and in-situ RF exposure assessments. It includes the key requirements for assessing RF exposure based on using the actual maximum approach. It also includes simplified criteria for putting BS into operation. Further details are provided in Annex C, Annex D and Annex E.

Clause 7 provides guidelines on how to select the evaluation method. Further details are provided in Annex A.

Clause 8 specifies the RF exposure evaluation methods to be used and refers to further details in Annex B, Annex C, Annex F and Annex H.

Clause 9 addresses the estimation of uncertainty and refers to Annex G and Annex H for further details.

Clause 10 describes reporting requirements for the evaluation or assessment.

Annexes and the bibliography are referenced extensively to provide useful clarifications or guidance.

Additional guidance can be found in IEC TR 62669:2019 [5], which includes a set of case studies providing practical examples of the application of this document.

Documents
Document Sharing Hub

© Standards Australia Limited/Standards New Zealand 2023

Full document details: AS NZS IEC 62232-2023

DETERMINATION OF RF FIELD STRENGTH, POWER DENSITY AND SAR IN THE VICINITY OF BASE STATIONS FOR THE PURPOSE OF EVALUATING HUMAN EXPOSURE

1 Scope

This document provides methods for the determination of RF field strength, power density and specific absorption rate (SAR) in the vicinity of base stations (BS) for the purpose of evaluating human exposure.

This document:

a) considers intentionally radiating BS which transmit on one or more antennas using one or more frequencies in the range 110 MHz to 300 GHz;

b) considers the impact of ambient sources on RF exposure at least in the 100 kHz to 300 GHz frequency range;

c) specifies the methods to be used for RF exposure evaluation for compliance assessment applications, namely:

   1) product compliance – determination of compliance boundary information for a BS product before it is placed on the market;

   2) product installation compliance – determination of the total RF exposure levels in accessible areas from a BS product and other relevant sources before the product is put into operation;

   3) in-situ RF exposure assessment – measurement of in-situ RF exposure levels in the vicinity of a BS installation after the product has been taken into operation;

d) specifies how to perform RF exposure assessment based on the actual maximum approach;

e) describes several RF field strength, power density, and SAR measurement and computation methodologies with guidance on their applicability to address both the in-situ evaluation of installed BS and laboratory-based evaluations;

f) describes how surveyors establish their specific evaluation procedures appropriate for their evaluation purpose;

g) provides guidance on how to report, interpret and compare results from different evaluation methodologies and, where the evaluation purpose requires it, determine a justified decision against a limit value;

h) provides methods for the RF exposure assessment of BS using time-varying beam-steering technologies such as new radio (NR) BS using massive multiple input multiple output (MIMO).

NOTE 1 Practical implementation case studies are provided as examples in the companion Technical Report IEC TR 62669:2019 [5].

NOTE 2 Although the current BS product types have been specified to operate up to 200 GHz (see, for example, [6] and [7]), the upper frequency of 300 GHz is consistent with applicable exposure limits.

NOTE 3 The lower frequency considered for ambient sources, 100 kHz, is derived from ICNIRP-1998 [2] and ICNIRP-2020 [1]. However, some applicable exposure guidelines require ambient fields to be evaluated as low as 3 kHz, e.g. Safety Code 6 [4] and IEEE Std C95.1-2019 [3].

NOTE 4 Specification of appropriate RF exposure mitigation measures such as signage, access control, and training are beyond the scope of this document. It is possible to refer to the applicable regulations or recommended practices on these topics.

NOTE 5 While this document is based on the current international consensus about the best engineering practice for assessing the compliance of RF exposure with the applicable exposure limits, it is possible that national regulatory agencies specify different requirements. The entity conducting an RF exposure assessment needs to be aware of the applicable regulations.

AVA Documents
Document Sharing Hub

© Standards Australia Limited/Standards New Zealand 2023

Full document details: AS NZS IEC 62232-2023

2 Normative references

The following documents are referred to in the text in such a way that some or all of their content constitutes requirements of this document. For dated references, only the edition cited applies. For undated references, the latest edition of the referenced document (including any amendments) applies.

IEC/IEEE 62209-1528, *Human exposure to radio frequency fields from hand-held and body-mounted wireless communication devices – Human models, instrumentation, and procedures: Measurement procedure for the assessment of specific absorption rate of human exposure to radio frequency fields from hand-held and body-worn wireless communication devices (Frequency range of 4 MHz to 10 GHz)*

IEC 62209-3, *Measurement procedure for the assessment of specific absorption rate of human exposure to radio frequency fields from hand-held and body-mounted wireless communication devices – Part 3: Vector measurement-based systems (Frequency range of 600 MHz to 6 GHz)*

IEC 62311, *Assessment of electronic and electrical equipment related to human exposure restrictions for electromagnetic fields (0 Hz – 300 GHz)*

IEC 62479, *Assessment of the compliance of low power electronic and electrical apparatus with the basic restrictions related to human exposure to electromagnetic fields (10 MHz – 300 GHz)*

IEC/IEEE 62704-1, *Determining the peak spatial-average specific absorption rate (SAR) in the human body from wireless communications devices, 30 MHz to 6 GHz – Part 1: General requirements for using the finite difference time-domain (FDTD) method for SAR calculations*

IEC/IEEE 62704-2, *Determining the peak spatial-average specific absorption rate (SAR) in the human body from wireless communications devices, 30 MHz to 6 GHz – Part 2: Specific requirements for finite difference time domain (FDTD) modelling of exposure from vehicle mounted antennas*

IEC/IEEE 62704-3, *Determining the peak spatial-average specific absorption rate (SAR) in the human body from wireless communications devices, 30 MHz to 6 GHz – Part 3: Specific requirements for using the finite difference time domain (FDTD) method for SAR calculations of mobile phones*

IEC/IEEE 62704-4, *Recommended practise for determining the Peak Spatial Average Specific Absorption Rate (SAR) in the human body from wireless communications devices, 30 MHz – 6 GHz: General requirements for using the Finite-Element Method (FEM) for SAR calculations and specific requirements for modelling vehicle-mounted antennas and personal wireless devices*

IEC/IEEE 63195-1, *Measurement procedure for the assessment of power density of human exposure to radio frequency fields from wireless devices operating in close proximity to the head and body – Frequency range of 6 GHz to 300 GHz*

IEC/IEEE 63195-2, *Determining the power density of the electromagnetic field associated with human exposure to wireless devices operating in close proximity to the head and body using computational techniques, 6 GHz to 300 GHz*

Documents
Document Sharing Hub

© Standards Australia Limited/Standards New Zealand 2023

Full document details: AS NZS IEC 62232-2023

3 Terms and definitions

For the purposes of this document, the following terms and definitions apply.

ISO and IEC maintain terminological databases for use in standardization at the following addresses:

- IEC Electropedia: available at http://www.electropedia.org/
- ISO Online browsing platform: available at http://www.iso.org/obp

3.1
absorbed energy density
U_{ab}
temporal integration of the absorbed power density, S, between time t_1 and t_2

Note 1 to entry: Given by the following equation from ICNIRP-2020 [1]:

$$U_{ab} = \int_{t_1}^{t_2} S_{ab}(t)\,\mathrm{d}t$$

where

S_{ab} is the absorbed power density;

t_1 is the start time of the assessment;

t_2 is the stop time of the assessment.

3.2
absorbed power
P_A
RF power dissipated in a volume V

Note 1 to entry: Given by

$$P_A = \int_V \sigma(x,y,z)\left[E(x,y,z)\right]^2 \mathrm{d}V$$

where

$E(x,y,z)$ is the RMS value of the electric field strength in the absorbing material at the point (x,y,z) in volt per metre;

$\sigma(x,y,z)$ is the electric conductivity of the absorbing material at the point (x,y,z) in siemens per metre.

3.3
absorbed power density
S_{ab}
spatial average over an area A of the power dissipated per unit of body surface

Note 1 to entry: Given by the following equation derived from ICNIRP-2020 [1]

$$S_{ab} = \frac{1}{A} \cdot \iint_A \mathrm{Re}\left[\vec{S}\right] \cdot \mathrm{d}\vec{s}$$

where

$\mathrm{Re}\left[\vec{S}\right]$ is the real part of the complex Poynting vector $\vec{s}$;

$\mathrm{d}\vec{s}$ is the integral variable vector with its direction normal to A;

A is the averaging area.

Documents
Document Sharing Hub
© Standards Australia Limited/Standards New Zealand 2023
Full document details: AS NZS IEC 62232-2023

3.4
actual
<transmitted power or EIRP or exposure> time-average of the transmitted power or EIRP or exposure from the equipment under test (EUT) in operation using the actual averaging time

3.5
actual averaging time
T_{avg_act}
time duration used for the averaging of the transmitted power or EIRP or exposure when implementing the actual maximum approach

3.6
actual maximum
<transmitted power or EIRP or exposure> maximum of the actual transmitted power or EIRP or exposure from the EUT during a given period (e.g. week or month)

3.7
actual maximum approach
evaluation of RF exposure taking into account the actual maximum thereof

3.8
actual maximum threshold
<actual transmitted power or EIRP> upper limiting value during base station (BS) operation of the actual transmitted power or EIRP configured by the EUT, for example using transmitted power or EIRP control features and tools implemented in the EUT

3.9
ambient field
background electromagnetic field in the frequency range from at least 100 kHz to 300 GHz other than the emissions from the EUT in the frequency range 110 MHz to 300 GHz

Note 1 to entry: Some applicable exposure guidelines require ambient fields to be considered as low as 3 kHz, e.g. Safety Code 6 [4] and IEEE Std C95.1-2019 [3].

3.10
ambient source
transmitter generating ambient fields

3.11
antenna factor
ratio of the electromagnetic field strength incident upon an antenna to the voltage (U) that is produced across a specified impedance (e.g. 50 Ω) terminating the line connection of the antenna

3.12
assessment
undertaking of an evaluation of RF exposure from an EUT in order to arrive at a judgement about comparison with the applicable exposure limits

3.13
assessment configuration
set of parameters which together represent the base station (BS) configuration to be assessed in accordance with the evaluation purpose, e.g. for conformity assessment

3.14
assessment domain boundary
ADB
surface surrounding the EUT outside of which the total exposure ratio (TER) is lower than 0,05

AVA Documents
Document Sharing Hub

© Standards Australia Limited/Standards New Zealand 2023

Full document details: AS NZS IEC 62232-2023

Note 1 to entry: It is possible that applicable regulations consider exposure ratio (ER) lower than 0,05 to be relevant (e.g. 0,01 of the measured TER).

3.15
assessment scheme
synopsis of the assessment process

EXAMPLE Measurements compared to limit value considering uncertainty.

3.16
auditor
person(s) having the appropriate level of expertise and responsible for planning, executing and reporting on the evaluation of RF field strength, power density or SAR levels and responsible for the verification of RF exposure compliance

Note 1 to entry: The auditor can be a member of the regulatory agency or a third-party RF safety consultant. As an example, a company could audit the compliance of their own facility, or a second RF safety consultant could audit the results of an initial survey.

3.17
average transmitted power
time-averaged transmitted power
P_{avg}
rate of transmitted energy transfer expressed in watts

Note 1 to entry: Given by

$$P_{\text{avg}} = \frac{1}{t_2 - t_1} \int_{t_1}^{t_2} P(t)\,\mathrm{d}t$$

where

t_1 is the start time of the observation in seconds;

t_2 is the stop time of the observation in seconds;

$P(t)$ is the instantaneous transmitted power in watts.

3.18
averaging time
T_{avg}
time duration specified in the applicable exposure limit guidelines over which exposure is averaged

Note 1 to entry: Depending on the applicable exposure limits, T_{avg} can take different values for localized RF exposure ($T_{\text{avg_local}}$) or whole-body exposure ($T_{\text{avg_wb}}$); see, for example, [1].

3.19
base station
product
equipment under test
BS
EUT
equipment, permanently or temporarily installed, including the radio transmitter and associated antenna(s) as used in wireless telecommunications networks

EXAMPLE Base stations for mobile communications, radio-relays, wireless local area network access points, base stations for cordless telephony, etc. that are not normally used in close proximity (i.e. within 20 cm) to the human body.

Note 1 to entry: Examples of wireless telecommunications networks include those used in mobile telecommunication systems in accordance with ITU-R M.1224-1 [8], wireless local area networks, public safety networks and fixed wireless systems (including radio-relay systems, point-to-point communication and point-to-multipoint communication in accordance with ITU-R F.592-4 [9] and ITU-R F.1339-1 [10]).

Documents
Document Sharing Hub

© Standards Australia Limited/Standards New Zealand 2023

Full document details: AS NZS IEC 62232-2023

Note 2 to entry: In the context of this document, radar transmitters, TV and radio broadcast equipment are not considered to be base station equipment.

3.20
basic restriction
exposure limit value specified in terms of an internal electromagnetic quantity in the body, such as specific absorption rate (SAR), arising from exposure to incident external electromagnetic fields

Note 1 to entry: More detailed rationale and definitions are provided in the applicable exposure guidelines; see, for example ICNIRP-2020 [1], ICNIRP-1998 [2], IEEE Std C95.1-2019 [3] and Safety Code 6 [4]. It is possible that alternative terms for basic restriction are used, such as dosimetric reference limit (DRL) specified in IEEE Std C95.1-2019 [3].

3.21
broadcast control channel
BCCH
logical broadcast channel used by the base station in a GSM network to send information about the identity of the network

3.22
broadcast EIRP envelope
EIRP envelope considering the configured broadcast beam patterns and the configured maximum transmitted power

3.23
broadcast radiation pattern envelope
configured envelope radiation pattern considering the broadcast beam patterns

3.24
broadcast signal
stable reference signal used in a base station (BS) to transmit synchronization signals and not subject to time variation due to user equipment (UE) traffic, comprising physical broadcast channel (PBCH) for 5G or reference signal (RS) for 4G LTE

3.25
carrier
in a modulated signal, the spectral component of a modulated signal having the frequency of the periodical carrier prior to modulation

Note 1 to entry: Carrier is often used as an equivalent to channel.

[SOURCE: IEC 60050-702:1992, 702-06-06 [11]]

3.26
channel
section of RF spectrum with a given frequency and bandwidth used for the transmission of a signal

Note 1 to entry: Carrier is often used as an equivalent to channel.

Note 2 to entry: Subcarrier or specific channel, e.g. physical broadcast channel (PBCH), can be used to represent a section of a channel.

3.27
collinear array antenna
antenna consisting of a linear array of radiating elements, usually dipoles, with their axes lying in a straight line

Documents
Document Sharing Hub

© Standards Australia Limited/Standards New Zealand 2023

Full document details: AS NZS IEC 62232-2023

3.28
compliance boundary
CB
surface of arbitrary shape defining a volume outside of which the applicable exposure limit is not exceeded

3.29
compliance distance
CD
distance from the EUT antenna to the compliance boundary for a stated direction and set of transmission conditions

Note 1 to entry: In the absence of a stated direction, the compliance distance is the maximum distance from the EUT antenna to the compliance boundary.

3.30
configured envelope radiation pattern
non-physical radiation pattern obtained by taking, for each azimuth and elevation direction, the maximum performance among the set of the radiation patterns of the base station antenna configured during operation

3.31
configured maximum
<transmitted power or EIRP> RMS maximum of the <transmitted power or EIRP> value as configured in the network manager of the base station

Note 1 to entry: This does not include the technology duty-cycle factor.

3.32
control boundary
set of locations which together specify where human access to a compliance boundary is restricted by either warnings or physical controls

3.33
cumulative distribution function
CDF
<of a real-value random variable X evaluated at x> probability that X takes a value less than or equal to x

3.34
directivity
D
<of an antenna, in a given direction> ratio of the radiation intensity produced by an antenna in a given direction to the value of the radiation intensities averaged across all directions in space

Note 1 to entry: If no direction is specified, the direction of maximum radiation intensity from the given antenna is implied.

Note 2 to entry: The directivity is independent of antenna losses and equal to the absolute gain in the same direction if the antenna has no internal losses.

Note 3 to entry: The ratio can also be expressed in decibels: dBi for decibels relative to an isotropic radiator, or dBd for decibels relative to a half-wave dipole having a gain of 2,15 dBi.

3.35
dish antenna
parabolic antenna usually used for radio-relays or point-to-point communications

Note 1 to entry: See more in ITU-R F.592-4 [9] and ITU-R F.1339-1 [10].

Documents
Document Sharing Hub
© Standards Australia Limited/Standards New Zealand 2023
Full document details: AS NZS IEC 62232-2023

3.36
domain of investigation
DI
volume within the assessment domain boundary (ADB) where there is access and where an RF exposure evaluation or assessment is performed

Note 1 to entry: Access in this context refers to any part of the body being within the ADB under normal conditions.

3.37
dynamic range
<of an exposure metric> difference, over a given period of time, between maximum and minimum values of an exposure metric, expressed in decibels

Note 1 to entry: In some cases, the dynamic range can be expressed as an interval.

3.38
electric field strength
E-field strength
E
vector field quantity E which exerts on any charged particle at rest a force F equal to the product of E and the electric charge Q of the particle:

$$F = Q \cdot E$$

[SOURCE: IEC 60050-121:1998, 121-11-18 [12]]

3.39
equivalent isotropic radiated power
EIRP
product of the radio frequency input power into an antenna and the absolute gain of the antenna in a given direction relative to an isotropic radiator

[SOURCE: IEC 60050-712:2021, 712-02-51 [13], modified – In the term, "isotropically" has been replaced by "isotropic"; in the definition, "power supplied by a radio transmitter to" has been replaced by "radio frequency input power into" and "relative to an isotropic radiator" has been added.]

3.40
evaluation
<of an exposure metric> process of determining a value of an exposure metric

3.41
evaluation configuration
set of parameter values which together represent the base station configuration used in the evaluation

3.42
evaluation location
specific physical location at which a single parameter value or multiple field parameter values have been measured or computed

Note 1 to entry: In the case of spatial averaging, this is the reference location specified in the spatial averaging scheme.

3.43
evaluation purpose
reason for performing the RF exposure evaluation, such as product compliance, product installation compliance, or in-situ evaluation

Documents
Document Sharing Hub

© Standards Australia Limited/Standards New Zealand 2023

Full document details: AS NZS IEC 62232-2023

3.44
exposure limit
exposure limit value
maximum value of an electromagnetic quantity a person can be exposed to from time-varying electric, magnetic, and electromagnetic fields, that is specified by the applicable RF exposure guidelines in terms of basic restrictions and reference levels including, when applicable, frequency dependency, spatial averaging and time averaging

Note 1 to entry: Exposure limits are not specified in this document. The entity conducting the RF exposure assessment needs to be aware of the applicable exposure guidelines. Examples of applicable exposure limits considered in this document are provided in the bibliography, for example ICNIRP-2020 [1], ICNIRP-1998 [2], IEEE Std C95.1-2019 [3] and Safety Code 6 [4].

3.45
exposure metric
electromagnetic quantity used for specifying exposure limit values

Note 1 to entry: More detailed rationale and definition is provided in IEEE Std C95.3™-2021 [14].

3.46
exposure ratio
ER
ratio of the exposure metric and the applicable exposure limit, both expressed in terms of power

EXAMPLE $\mathrm{ER} = \frac{S}{S_{\mathrm{lim}}}$, $\mathrm{ER} = \max\left[\left(\frac{E}{E_{\mathrm{lim}}}\right)^2, \left(\frac{H}{H_{\mathrm{lim}}}\right)^2\right]$, where S_{lim}, E_{lim} and H_{lim} are the applicable limits.

Note 1 to entry: The exposure ratio can also be expressed as a percentage of the applicable exposure limit, i.e. ER % = ER (dimensionless) × 100 %.

3.47
frequency response
<of a probe> curve representing the variations, with respect to frequency, of the indicated level of the exposure metric of a probe

3.48
full buffer
base station traffic model with one or multiple user equipments (UEs) in a cell characterized by a constant number of connected UEs and the buffers of the UE related data flows continuously having an unlimited amount of data to transmit

Note 1 to entry: Derived from [15].

3.49
full wave
<method> computational method to solve the Maxwell's equations for electromagnetic waves numerically without any initial physical approximations being made

3.50
gain
G
ratio of the radiation intensity produced by a given antenna in a given direction to the radiation intensity that would be obtained if the power accepted by the antenna were radiated equally in all directions

Note 1 to entry: If no direction is specified, the direction of maximum radiation intensity from the given antenna is implied.

Note 2 to entry: When the absolute gain is expressed in decibels, the notation dBi is recommended by the International Telecommunication Union as a unit symbol.

Documents
Document Sharing Hub
© Standards Australia Limited/Standards New Zealand 2023
Full document details: AS NZS IEC 62232-2023

3.51
general public
GP
all persons not classified as worker

3.52
in-situ RF exposure evaluation
determination of in-situ RF exposure levels in the vicinity of a base station installation during operation

3.53
incident energy density
U_{inc}
temporal integration of the power density, S, between time t_1 and t_2

Note 1 to entry: Given by the following equation derived from ICNIRP-2020 [1]:

$$U_{\text{inc}} = \int_{t_1}^{t_2} S(t)\,\mathrm{d}t$$

where

S is the power density;

t_1 is the start time of the assessment;

t_2 is the stop time of the assessment.

Note 2 to entry: In the context of this document, "power density" S is used in this definition instead of "incident power density" introduced in ICNIRP-2020 [1].

3.54
intended use
reasonably foreseeable use of a base station for the purpose intended, over its full range of applicable functions, in accordance with the instructions provided by the manufacturer, including installation and operation instructions

3.55
licensed assisted access
LAA
variant of LTE used with unlicensed frequency band

3.56
linearity
<of a curve> deviation from a straight line of a curve representing an output quantity as a function of an input quantity

3.57
localized RF exposure
value of RF exposure averaged over a small area or volume or mass as specified by applicable RF exposure guidelines

3.58
local SAR
SAR averaged within a local region based on a specific averaging mass

3.59
lower detection limit
minimum quantifiable response of an item of measuring equipment

Documents
Document Sharing Hub

© Standards Australia Limited/Standards New Zealand 2023

Full document details: AS NZS IEC 62232-2023

3.60
magnetic field strength
H-field strength
H
vector quantity obtained at a given point by subtracting the magnetization M from the magnetic flux density B divided by the permeability of free space μ_0:

$$H = \frac{B}{\mu_0} - M$$

Note 1 to entry: In a vacuum, the magnetic field strength is at all points equal to the magnetic flux density divided by the permeability of free space:

$$H = \frac{B}{\mu_0}$$

Note 2 to entry: The rotation of the magnetic field strength is the total of the conduction and displacement current density J_t:

$$\text{rot}\, H = J_t$$

Note 3 to entry: The magnetic flux density B is sometimes called "magnetic field", risking confusion with the magnetic field strength H.

[SOURCE: IEC 60050-121:1998, 121-11-56 [12]]

3.61
massive MIMO
massive multiple-input, multiple-output
mMIMO
multi-antenna technique, characterized by a large number of antennas (typically above eight) to allow beamforming and beam-steering in addition to MIMO techniques improving communication performance, capacity and coverage

Note 1 to entry: More details on massive MIMO techniques can be found in [16].

3.62
massive MIMO antenna
antenna used with a BS implementing massive MIMO techniques

Note 1 to entry: The term "massive MIMO antenna" is often used in this document with the same meaning as time-varying beam-steering antenna.

3.63
maximum transmitted power
P_{TXM}
maximum total power transmitted by a base station measured during the transmitter ON period

Note 1 to entry: This applies either to the rated or configured power.

3.64
measurement drift
power drift
gradual deviation over time from a reproducible reading of the measured value

Documents
Document Sharing Hub
© Standards Australia Limited/Standards New Zealand 2023
Full document details: AS NZS IEC 62232-2023

3.65
measurement system
equipment used for measuring exposure metrics which can include probes, antennas, meters, amplifiers, chambers, stands, and associated components

3.66
multiple-input, multiple-output
MIMO
technique used to increase the communication throughput by using transmission of two or more different data streams on two or more different antennas, using the same resources in both frequency and time, separated only by the use of different reference signals, and to be received by two or more antennas

3.67
network management system
NMS
system providing a package of end-user functions with the responsibility for the management of a network, mainly as supported by the element managers but also involving direct access to the network elements in a mobile network

3.68
network performance tool
tool for taking active measurements of the maximum achievable bandwidth on an IP network

3.69
new radio
NR
5G mobile network technology as specified by the 3rd Generation Partnership Project (3GPP)

Note 1 to entry: See, for example, 3GPP 38.104 [17] for the specification of NR base stations.

3.70
peak antenna gain
G_p
maximum value of the gain considering all radiating directions

3.71
peak spatial-average SAR
psSAR
maximum SAR averaged within a local region based on a specific averaging mass

Note 1 to entry: A specific averaging mass can be, for example, any 1 g or 10 g of tissue in the shape of a cube.

Note 2 to entry: In this document, the terms psSAR (over 1 g or 10 g) and the terms 1 g SAR and 10 g SAR are used interchangeably.

3.72
physical broadcast channel
PBCH
transmission channel that is used to transfer information to all user equipments (UEs) that are operating in a radio coverage area

Note 1 to entry: See 3GPP TS 36.211 [18] for LTE and 3GPP TS 38.211 [19] for NR.

3.73
physical downlink control channel
PDCCH
channel that carries scheduling assignments and other control information

Note 1 to entry: See 3GPP TS 36.211 [18] for LTE and 3GPP TS 38.211 [19] for NR.

Documents
Document Sharing Hub

© Standards Australia Limited/Standards New Zealand 2023

Full document details: AS NZS IEC 62232-2023

3.74
physical downlink shared channel
PDSCH
downlink data channel for users

Note 1 to entry: See 3GPP TS 36.211 [18] for LTE and 3GPP TS 38.211 [19] for NR.

Note 2 to entry: A physical resource block thus consists of 7 × 12 resource elements, corresponding to one slot in the time domain and 180 kHz in the frequency domain.

Note 3 to entry: In NR technology, different number of symbols and subcarriers are possible. (from 3GPP TS 38.211 [19]).

3.75
plane wave equivalent power density
power density equal in magnitude to the power density of a plane wave

3.76
point of investigation
PoI
location of the maximum RF exposure when performing a slow scan over a measurement area at a height of 1,5 m above the walking or standing surface

3.77
power combination factor
multiplication factor that is applied to the power reduction factor in cases where a combination of multiple independent signals exists

3.78
power density
<of an electromagnetic wave> power passing through a surface normal to the direction of propagation of energy of an electromagnetic wave divided by the area of the surface

3.79
power reduction factor
F_{PR}
factor applied to the product of the configured maximum transmitted power or EIRP and the technology duty-cycle factor in order to obtain the actual maximum transmitted power or EIRP, or the actual maximum power or EIRP threshold, when a control feature is implemented

Note 1 to entry: The power reduction factor can be obtained from statistical analysis (cumulative distribution function) of the actual transmitted power or EIRP relative to the configured maximum.

Note 2 to entry: When applied to EIRP, the power reduction factor includes variations in both the transmitted power and the antenna gain.

3.80
probe isotropy
degree to which the response of an electric field or magnetic field probe is independent of the polarization and direction of propagation of the incident wave

3.81
product compliance
determination of compliance boundary information for a BS product before it is placed on the market

3.82
product envelope radiation pattern
envelope radiation pattern considering all beam patterns configurable on a BS product

Documents
Document Sharing Hub
© Standards Australia Limited/Standards New Zealand 2023
Full document details: AS NZS IEC 62232-2023

3.83
product installation compliance
determination that the total RF exposure in accessible areas from a BS product and other relevant sources is in compliance with applicable limits before the product is put into operation, for its first use or after an upgrade impacting its emission parameters

Note 1 to entry: Emission parameters include transmitted power or frequency, gain, tilt and azimuth.

3.84
radiation intensity
RF power radiated per solid angle

3.85
rated maximum
<of the transmitted power or EIRP> RMS maximum of the transmitted power or EIRP value as declared by the manufacturer when placing the product on the market

3.86
reference level
exposure limit value specified in terms of an incident electromagnetic quantity such as externally applied electric field strength, magnetic field strength or power density, that is easier to measure or calculate than the underlying basic restrictions, and that when respected, results in compliance with these basic restrictions

Note 1 to entry: More detailed rationale and definitions are provided in the applicable exposure guidelines; see, for example ICNIRP-2020 [1], ICNIRP-1998 [2], IEEE Std C95.1-2019 [3] and Safety Code 6 [4].

3.87
relevant source
RF source with an ER equal to or greater than 0,05 to be considered when performing an RF exposure assessment

Note 1 to entry: It is possible that applicable regulations consider ER criteria lower than 0,05 to be relevant (e.g. 0,01 of the measured TER).

Note 2 to entry: Not to be confused with source of interest.

3.88
resource block
RB
<LTE system> series of N = 6 (in the case of extended cyclic prefix) or N = 7 (in the case of a normal cyclic prefix) consecutive OFDM symbols in the time domain and N = 12 consecutive subcarriers in the frequency domain in an LTE system

Note 1 to entry: Derived from 3GPP TS 36.211 [18] (LTE).

3.89
resource block
RB
<NR system> series of N = 12 consecutive subcarriers in the frequency domain in an NR system

Note 1 to entry: Derived from 3GPP TS 38.211 [19] (NR).

3.90
resource element
RE
OFDM symbol transmitted in the resource grid of an LTE or NR system

Note 1 to entry: Derived from 3GPP TS 36.211 [18] and 3GPP TS 38.211 [19].

Documents
Document Sharing Hub

© Standards Australia Limited/Standards New Zealand 2023

Full document details: AS NZS IEC 62232-2023

3.91
RF field strength
electric field strength and/or magnetic field strength from an RF source

3.92
segment
<of a BS sector or a BS cell> solid angle in front of a BS sector or a BS cell described by an azimuth aperture range (delimited by an initial angle φ_i and a final angle φ_{i+1}) and elevation aperture range (delimited by an initial angle θ_j and a final angle θ_{j+1})

3.93
source
RF source
electronic equipment intentionally transmitting an RF signal

Note 1 to entry: Electronic equipment supporting wireless power transfer can be considered an RF source.

3.94
source-environment plane
method to identify the evaluation regions to be considered in the evaluation point selection based on environmental complexity and distance from the source

3.95
source of interest
RF source with an ER equal to or greater than −40 dB (or 0,000 1) to be considered when performing in-situ measurements for presenting RF exposure measurement results even if they are well below the exposure limits

Note 1 to entry: Not to be confused with relevant source.

Note 2 to entry: The ER threshold can be adjusted depending on the applicable regulation.

3.96
source region
spatial volume surrounding an antenna, divided into three regions in accordance with the impact the field characteristics have on the evaluation of the RF field strength, power density or SAR

Note 1 to entry There are two source regions near the antenna, called source region I and source region II, and one at a larger distance, called source region III. These source regions can be referred to as the reactive near-field, the radiative near-field, and the far-field, respectively.

3.97
spatial averaging scheme
method used to perform spatial averaging of RF exposure

3.98
spatial-peak
<electric field, magnetic field, SAR or power density> non-spatially averaged peak value of the electric field, magnetic field, SAR or power density

3.99
specific absorption rate
SAR
time derivative of the incremental electromagnetic energy ($\mathrm{d}W$) absorbed by (dissipated in) an incremental mass ($\mathrm{d}m$) contained in a volume element ($\mathrm{d}V$) of given mass density (ρ)

$$\mathrm{SAR} = \frac{\mathrm{d}}{\mathrm{d}t}\left(\frac{\mathrm{d}W}{\mathrm{d}m}\right) = \frac{\mathrm{d}}{\mathrm{d}t}\left(\frac{\mathrm{d}W}{\rho \mathrm{d}V}\right)$$

Documents
Document Sharing Hub
© Standards Australia Limited/Standards New Zealand 2023
Full document details: AS NZS IEC 62232-2023

Note 1 to entry: SAR can be obtained using the following equation:

$$\text{SAR} = \frac{\sigma \cdot E^2}{\rho}$$

where

SAR is the specific absorption rate in watts per kilogram (W kg^{-1});

E is the RMS value of the electric field strength in the tissue in volt per metre;

σ is the electric conductivity of the tissue in siemens per metre;

ρ is the density of the tissue in kilograms per cubic metre.

Note 2 to entry: The time derivative of energy absorbed is equivalent to absorbed power as specified in 3.1.

3.100
specific energy absorption
SEA
incremental electromagnetic energy (dW) absorbed by (dissipated in) an incremental mass (dm) contained in a volume element (dV) of given mass density (ρ)

$$\text{SEA} = \frac{\mathrm{d}W}{\mathrm{d}m} = \frac{\mathrm{d}W}{\rho \mathrm{d}V}$$

3.101
sub-carrier
<OFDM> one of a large number of closely spaced or overlapping orthogonal narrow-bandwidth data signals within an OFDM channel

Note 1 to entry: Derived from 3GPP TS 36.211 [18] and 3GPP TS 38.211 [19].

3.102
sub-carrier spacing
<OFDM> frequency separation between OFDM sub-carriers

Note 1 to entry: Derived from 3GPP TS 36.211 [18] and 3GPP TS 38.211 [19].

3.103
surveyor
person or persons having the appropriate level of expertise and responsible for planning, executing and reporting on the evaluation of RF field strength, power density or SAR levels

3.104
technology duty-cycle factor
F_{TDC}
ratio of the time that a transmitter transmits over a specified period

Note 1 to entry: For frequency division duplex (FDD) systems, the technology duty-cycle factor is 1.

3.105
time-averaged
<transmitted power or EIRP or exposure> average value of the transmitted power or EIRP or exposure over a relevant time period

3.106
traffic EIRP envelope
EIRP envelope considering the configured traffic beam patterns and the configured maximum transmitted power

Documents
Document Sharing Hub

© Standards Australia Limited/Standards New Zealand 2023

Full document details: AS NZS IEC 62232-2023

3.107
traffic radiation pattern envelope
configured envelope radiation pattern considering the traffic beam patterns

3.108
traffic signal
downlink signal used by a BS to transmit user's traffic data and subject to time variation due to traffic and spatial variation in case of beamforming

Note 1 to entry: In mobile radio technologies using active antenna systems (AAS), broadcast signals and traffic signals can be transmitted on different beams, having different radiation patterns. Broadcast signals can be transmitted on a single beam, whose radiation pattern does not change in time, or on a finite set of beams, whose patterns do not change in time, swept periodically. Traffic signals are transmitted on a complex combination of beams depending on the antenna's beamforming implementation, such as grid of beam (GoB) or eigen-beamforming (EBB).

3.109
transmitted power
P_{TX}
instantaneous total power transmitted by a base station under test during the transmitter ON period

3.110
upper detection limit
maximum quantifiable response of a measuring equipment

3.111
user equipment
UE
device used directly by an end-user to communicate in a mobile network

3.112
whole-body RF exposure
RF exposure averaged over the whole body, at a reference location identified in the spatial averaging scheme

3.113
worker
adult who is generally exposed to RF fields under known conditions and is trained to be aware of potential risks related to RF exposure and to take appropriate precautions

Note 1 to entry: It is possible that applicable regulations consider a different definition for worker and use the term "RF worker".

Note 2 to entry: It is possible that applicable regulations consider occupational exposure limits for workers.

Documents
Document Sharing Hub
© Standards Australia Limited/Standards New Zealand 2023
Full document details: AS NZS IEC 62232-2023

4 Symbols and abbreviated terms

4.1 Physical quantities

The internationally accepted SI units are used throughout this document.

Symbol	Quantity	Unit	Dimensions
α	Attenuation coefficient	reciprocal metre	m^{-1}
B	Magnetic flux density	tesla	T, V s m^{-2}
c_h	Specific heat capacity	joule per kilogram per kelvin	J kg^{-1} K^{-1}
E	Electric field strength	volt per metre	V m^{-1}
f	Frequency	hertz	s^{-1}
H	Magnetic field strength	ampere per metre	A m^{-1}
J	Current density	ampere per square metre	A m^{-2}
T	Temperature	kelvin	K
ε	Permittivity	farad per metre	F m^{-1}
λ	Wavelength	metre	m
μ	Permeability	henry per metre	H m^{-1}
P	Power	watts	W
S	Power density	watts per square metre	W m^{-2}
Ω	Resistance	ohm	V A^{-1}
ρ	Mass density	kilogram per cubic metre	kg m^{-3}
σ	Electric conductivity	siemens per metre	S m^{-1}

NOTE 1 In this document, temperature is quantified in degrees Celsius, as specified by: T (°C) = T (K) − 273,16.

NOTE 2 Annex A and Clause B.2 specify additional symbols and variables used in this document.

4.2 Constants

Symbol	Physical constant	Magnitude
c	Speed of light in vacuum	2,997 9 × 10^8 m s^{-1}
η_0	Impedance of free space	376,730 3 Ω (approximately 120π Ω)
ε_0	Permittivity of free space	8,854 188 × 10^{-12} F m^{-1}
μ_0	Permeability of free space	4π × 10^{-7} H m^{-1}

4.3 Abbreviated terms

Abbreviation	Term
2G/3G/4G/5G	generations of mobile radio technology
4K HD	ultra-high definition
AAS	active antenna system
ADB	assessment domain boundary
AMPS	advanced mobile phone system
BCCH	broadcast control channel
BS	base station
CB	compliance boundary

Documents
Document Sharing Hub

© Standards Australia Limited/Standards New Zealand 2023

Full document details: AS NZS IEC 62232-2023

Abbreviation	Term
CD	compliance distance
CDD	cyclic delay diversity
CDF	cumulative distribution function
CDMA	code division multiple access
CF	correction factor
ChP	channel power
Co-pol	co-polarization
CI	confidence interval
CP	cyclic prefix
CPICH	common pilot channel
CRS	cell-specific reference signal
CSI-RS	channel state information – reference signal
CTRL	control
CW	continuous wave
DAB	digital audio broadcasting
DCI	downlink control information
DECT	digital enhanced cordless telecommunications
DI	domain of investigation
DL	downlink
DMRS	demodulation reference signal
DPCH	dedicated physical channel
DRL	dosimetric reference limit
DSS	dynamic spectrum sharing
E-field	electric field
EBB	eigen-based beamforming or eigen-beamforming or eigen-value based beamforming
eMBB	enhanced mobile broadband
EIRP	equivalent isotropic radiated power or equivalent isotropically radiated power
EM	electromagnetic
EMF	electromagnetic fields (includes electric, magnetic and electromagnetic fields)
ER	exposure ratio
EUT	equipment under test
FCC	federal communications commission
FDD	frequency division duplex
FDMA	frequency division multiple access
FDTD	finite difference time domain
FEM	finite element method
FIT	finite integration technique
FM	frequency modulation
GoB	grid of beam
GP	general public or general population

Documents
Document Sharing Hub
© Standards Australia Limited/Standards New Zealand 2023
Full document details: AS NZS IEC 62232-2023

Abbreviation	Term
GSCN	global synchronization channel number
GSM	global system for mobile communications (originally *Groupe Spécial Mobile*)
H-field	magnetic field
HD	high definition
HPBW	half-power beamwidth
ICNIRP	International Commission on Non-Ionizing Radiation Protection
IP	Internet Protocol
ISM	industrial, scientific and medical
LAA	licensed assisted access
LoS	line of sight
LTE	long term evolution
MAC	media access control
MIMO	multiple-input, multiple output
mMIMO	massive MIMO
MoM	method of moments
NLoS	non line of sight
NM	network manager
NMT	nordic mobile telephone
NR	new radio (5G)
NR-ARFCN	NR absolute radio frequency channel number
OFDM	orthogonal frequency division multiplexing
P-SS	primary synchronization signal
PA	power amplifier
PBCH	physical broadcast channel
PDCCH	physical downlink control channel
PDSCH	physical downlink shared channel
PML	perfectly matched layer
PoI	point of investigation
PRACH	physical random access channel
PRB	physical resource block
RAT	radio access technology (2G, 3G, 4G or 5G)
RB	resource block
RBW	resolution bandwidth
RE	resource element
RF	radio frequency
RMS	root mean square
RRC	radio resource control
RS	reference signal
Rx	receiving
S-SS	secondary synchronization signal
SEA	specific energy absorption
SA	spectrum analyser

Documents
Document Sharing Hub

© Standards Australia Limited/Standards New Zealand 2023

Full document details: AS NZS IEC 62232-2023

Abbreviation	Term
SAR	specific absorption rate
sd	standard deviation
SSB	synchronization signal block
TCP	transmission control protocol
TDC	technology duty-cycle
TDD	time division duplex
TDMA	time division multiple access
TER	total exposure ratio
TETRA	terrestrial trunked radio
TM	transmission mode
TRP	total radiated power
TS	transmission scheme
UDP	user datagram protocol
UE	user equipment
UL	uplink
UMTS	universal mobile telecommunications system
USDC	United States digital cellular
VBW	video bandwidth
WCDMA	wideband code division multiple access
Wi-Fi®[2)]	wireless fidelity
WiMAX	worldwide interoperability for microwave access
X-pol	cross-polarization

5 How to use this document

5.1 Quick start guide

Given the different evaluation methods of determining human exposure from EMF, and their inherent complexities, this document contains a significant amount of technical detail. While such detail is necessary, care has been taken to layer the presentation of information, with content broadly separated into process, detail, and additional information. The quick start guide outlined in Figure 1 and Table 1 provides an overview of the evaluation process.

Figure 1 outlines the evaluation process along with the evaluation steps detailed in Table 1. This sequence involves determining the evaluation purpose, method(s) of evaluation, extrapolation, spatial averaging, time averaging and multiple frequency summation as appropriate. The uncertainty and reporting stages complete the evaluation process. A report template is specified in 10.2, and worked case studies are introduced in 5.3.

[2] Wi-Fi® is a trademark of the Wi-Fi Alliance. This information is given for the convenience of users of this document and does not constitute an endorsement by IEC. While officially the term does not have a specific definition, it is typically used to describe Wireless Local Area Networks such as IEEE 802.11b/g/n/ac.

AVA Documents
Document Sharing Hub

Full document details: AS NZS IEC 62232-2023

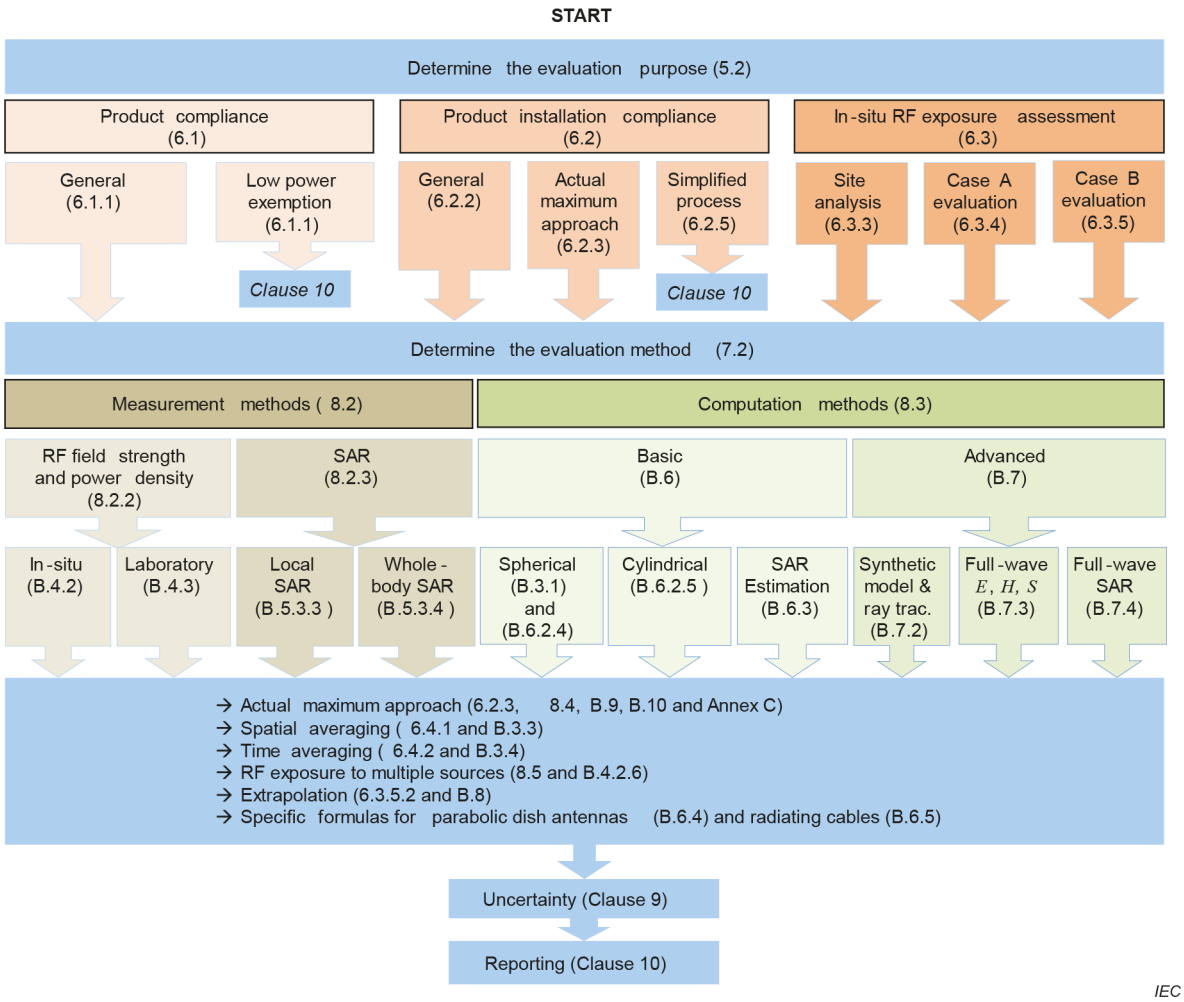

Figure 1 – Quick start guide to the evaluation process

© Standards Australia Limited/Standards New Zealand 2023

Documents
Document Sharing Hub

Full document details: AS NZS IEC 62232-2023

Table 1 – Quick start guide evaluation steps

Stage	Evaluation steps	Action
Determine evaluation purpose (5.2)	Determine the purpose of the evaluation: – product compliance – product installation compliance, or – in-situ RF exposure evaluation	Confirm purpose of evaluation
RF exposure evaluation process (Clause 6)	Determine the applicable process to be used for the chosen evaluation purpose.	Run the evaluation process
Determine evaluation method (7.1)	Determine if a simplified evaluation process is applicable. Otherwise, select either a measurement or computation evaluation method, or both if required. Evaluation methods are ranked, and in general a higher-ranked method takes precedence. However, lower ranking evaluations are valid within their applicability and can be more practical to implement, depending on cost, feasibility, and resource availability.	Select evaluation method
Measurement (8.2)	Determine applicable measurement procedures: – laboratory or in-situ measurement – SAR, RF field strength (broadband or narrowband) measurements or power density	Select relevant measurement procedures if applicable
Computation (8.3)	Determine applicable computation methods. For example, a simple peak RF field strength evaluation, which is conservative, can be used. Even though higher-ranking evaluation methods shall take precedence, they depend on the detailed information about the source and environment, as well as the availability of software packages capable of modelling such complexities.	Select relevant computation procedures if applicable
Assessment based on the actual maximum approach (8.4)	Determine if an assessment is based on the actual maximum transmitted power or EIRP. Determine if tools for monitoring and/or control tools are required and how they are implemented in accordance with specifications for monitoring counter in 8.4.2 and for control features in 8.4.3 and validation methods using 8.6, Annex B.10 and Annex C.	Select the implementation method based on the actual maximum approach
Extrapolation (B.8)	Determine if extrapolation is required. Where the test configuration differs from the required final evaluation configuration, an extrapolation factor is required to adjust evaluated results (RF field strength, power density or SAR).	Determine extrapolation factor and apply to results
Summation (8.5)	Determine if the evaluation requires summation of combined exposure. Summation of combined RF field strength, power density or SAR value is required either when a single source emits RF fields on multiple frequency bands or when evaluating RF fields from multiple sources.	Sum test results if required
Uncertainty (Clause 9)	Any measurement or computation can only approximate the exposure metric within the uncertainty tolerance, and so a quantitative statement of uncertainty is required.	Determine uncertainty and complete the uncertainty table when applicable
Reporting (Clause 10)	The final report describes the results of the evaluation, provides technical details to allow for repeatability, and interprets the results by comparison with the applicable RF exposure limit, if required.	Prepare the final report

Documents
Document Sharing Hub
© Standards Australia Limited/Standards New Zealand 2023
Full document details: AS NZS IEC 62232-2023

5.2 RF evaluation purpose categories

This document specifies the three main categories of RF exposure evaluation purpose as follows.

a) Product compliance: determination of compliance boundary information for a BS product before it is placed on the market, see 6.1.

b) Product installation compliance: determination of the total RF exposure levels in accessible areas from a BS product and the resulting compliance boundary information, i.e. compliance distance(s), if any, on the BS installation site taking into account contributions from other relevant sources before the product is put into operation, see 6.2.

c) In-situ RF exposure assessment: measurement of RF exposure levels in the vicinity of a BS installation after the product has been installed and is operating, see 6.3.

Clause 7 provides guidelines on how to select the evaluation method.

5.3 Implementation case studies

IEC TR 62669 [5], contains implementation case studies of typical BS sites to illustrate RF exposure evaluation or assessments for the most common types of BS deployed in mobile and wireless networks, such as small cells, street cells, macro base stations, and parabolic dish antennas used for wireless transmission or mobile backhaul. The lessons learned from each case study lead to recommendations about RF assessment topics to be considered in a subsequent revision of this document. The methodologies and approaches described in [5] are useful for the assessment of early NR BS introduced for consumer trials or deployments.

The implementation case studies in [5] are provided for guidance only and are not a substitute for a thorough understanding of the requirements of this document.

6 Evaluation processes for product compliance, product installation compliance and in-situ RF exposure assessments

6.1 Evaluation process for product compliance

6.1.1 General

A manufacturer is typically required to provide RF exposure information, including relevant compliance boundaries (exclusion zones), to the end user of the product. The compliance boundary (CB) shall be established for the applicable RF exposure limits using RF field strength, power density or SAR assessment methods in accordance with 6.1.2 to 6.1.5. IEC 62479 specifies low power exemption criteria. In circumstances where IEC 62479 is applicable, no compliance boundary is required when a product complies with IEC 62479.

NOTE 1 In this document, the term manufacturer refers to the legal entity intending to place a BS product on the market.

Compliance boundary information is normally determined for one or several selected typical configurations at the rated maximum power and, when relevant, for one or several actual maximum power or EIRP levels, see 6.1.5.1, and assuming free space conditions. Parameters that determine a configuration are, for example, frequency band, bandwidth, access technology, duplexing, antenna, feeder, and information about configurable beams (gain, horizontal beamwidth, vertical beamwidth, EIRP, etc.) for antennas using beamforming.

NOTE 2 Establishing compliance boundaries can be one of a range of requirements or methods that relate to product compliance.

6.1.2 Establishing compliance boundaries

The criteria specified in Table 3 and Clause 8 shall be used to select the exposure metric.

AVA Documents
Document Sharing Hub

© Standards Australia Limited/Standards New Zealand 2023

Full document details: AS NZS IEC 62232-2023

Depending on the frequency range, SAR or power density measurements are the most appropriate evaluation method to determine the compliance boundary for small stand-alone BS and multi-element BS antennas. For SAR measurements, the largest dimension of the antenna shall be less than or equal to 1,5 m, see 8.2.2 and Clause B.5. Examples of this type of equipment include medium range, local area, or home BS; see 3GPP TS 25.104 [20], 3GPP TS 36.104 [21]. Alternatively, SAR can be calculated using estimation formulas or using advanced computational methods, see B.6.3 and B.7.4, respectively.

For all BS products, in particular wide area and medium range BS, see 3GPP TS 25.104 [20], 3GPP TS 36.104 [21], RF field strength or power density evaluations are applicable. Either laboratory measurements or computations can be used, see B.4.3, Clause B.6 and Clause B.7.

6.1.3 Iso-surface compliance boundary definition

The most accurate (smallest) compliance boundary is obtained as an iso-surface. The 3D iso-surface boundary is described by the locations around the antenna where exposure just equals the applicable RF exposure limit value, see Figure 2.

In this case the shape of the compliance boundary shall be accurately described, e.g. in terms of a mathematical function $z = f(x,y)$.

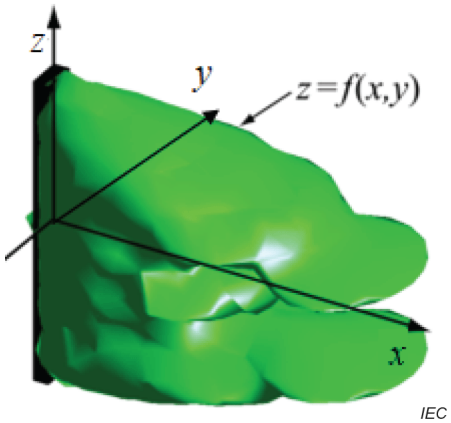

Figure 2 – Example of iso-surface compliance boundary

6.1.4 Simple compliance boundaries

The iso-surface compliance boundary specified in 6.1.3 can be enclosed in simpler shaped volumes described by a set of compliance distances (CD) to provide more conservative compliance boundaries. Valid compliance boundary shapes are not limited to these examples.

In Figure 3 a), b) and c), circular cylindrical, elliptical cylindrical and half-pipe compliance boundaries, respectively, are illustrated for a sector coverage antenna and a colinear omnidirectional antenna.

Documents
Document Sharing Hub
© Standards Australia Limited/Standards New Zealand 2023
Full document details: AS NZS IEC 62232-2023

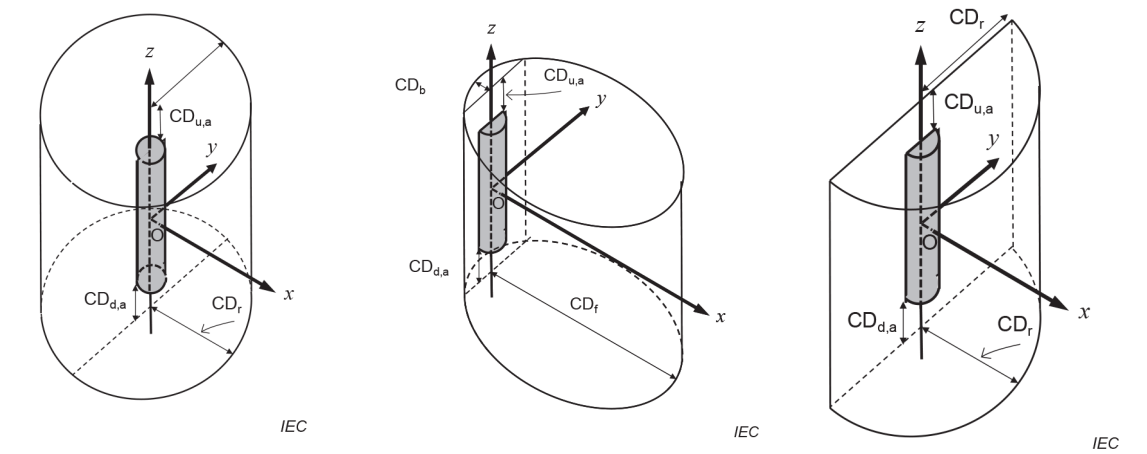

a) Colinear omnidirectional antenna – circular cylindrical boundary

b) Sector coverage antenna – elliptical cylindrical boundary

c) Sector coverage antenna – half-pipe boundary

Figure 3 – Example of cylindrical and half-pipe compliance boundaries

The compliance boundary for the sector coverage antenna is described in terms of CD_f, CD_b, $CD_{d,a}$, $CD_{u,a}$, and the antenna length and thickness in accordance with Figure 3. Note that for the sector coverage antenna the distances CD_f and CD_b shall be determined so that the aforementioned iso-surface is completely inscribed by the cylinder. In a similar way, the compliance boundary for the horizontally omnidirectional antenna is described in terms of CD_r, $CD_{d,a}$, $CD_{u,a}$, and the length and radius of the antenna.

NOTE Subscript " $CD_{*,a}$" indicates that the distance is measured from the EUT antenna boundary. Other distance references can also be taken, for example from the centre of the panel. In this case, the subscript " $CD_{*,c}$" of the EUT antenna is also used. See more about antenna reference point in B.2.1.

The box shaped compliance boundary shown in Figure 4 can be used for directional antennas, for example a panel antenna. In this case the boundary is described in terms of CD_f, CD_b, $CD_{d,a}$, $CD_{u,a}$, $CD_{s,a}$, and the dimensions of the antenna.

In order to take into account the horizontal beamwidth of the antenna, the box shape can be truncated with 45° cut plane on the edges near the panel antenna. The truncated box shaped compliance boundary is described in Figure 5, which includes the truncation distance CD_t in addition to the parameters of the box shaped compliance boundary, see Figure 4.

© Standards Australia Limited/Standards New Zealand 2023

Documents
Document Sharing Hub

Full document details: AS NZS IEC 62232-2023

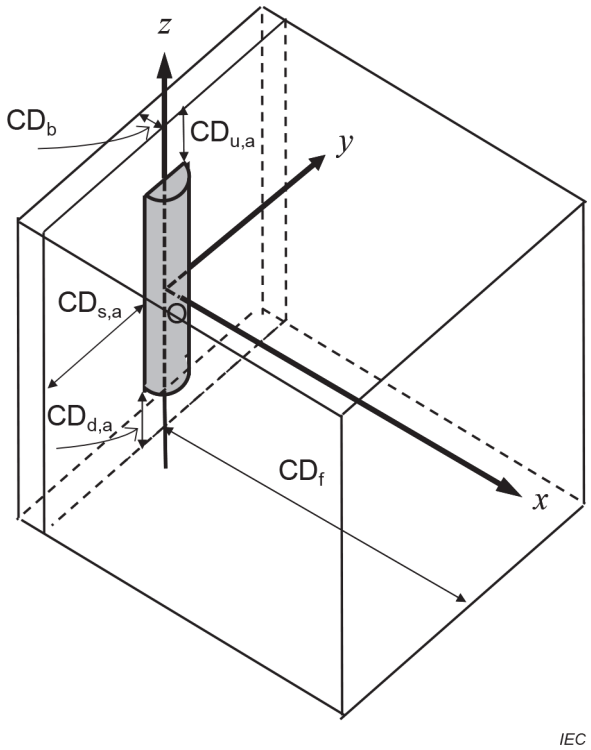

Figure 4 – Example of box shaped compliance boundary

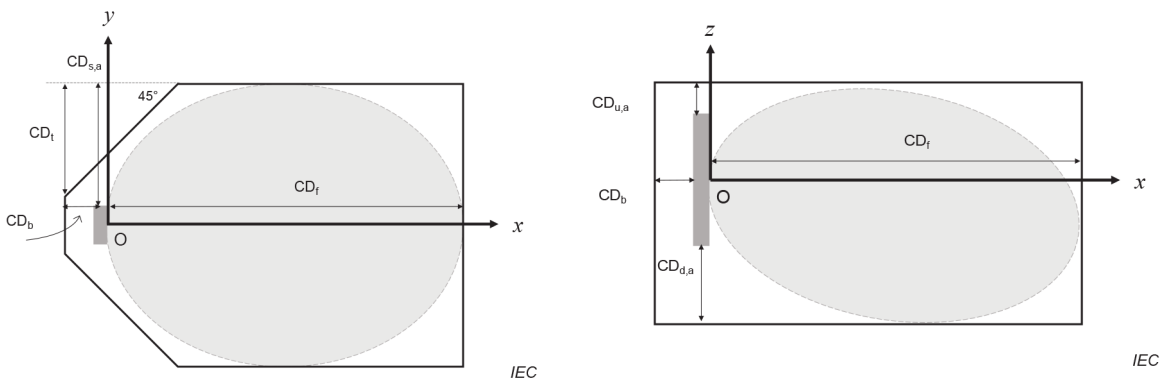

a) Top view **b) Side view**

Figure 5 – Example of truncated box shaped compliance boundary

6.1.5 Methods for establishing the compliance boundary

6.1.5.1 General

The compliance boundary shall be established in accordance with 6.1.5.2 to 6.1.5.8 using evaluation methods specified in Clause 8 and Annex B.

The compliance boundary shall be evaluated for:

a) the rated maximum power or EIRP, see 8.6; and

b) one or more actual maximum transmitted power or EIRP value(s) using a power reduction factor if the equipment that is put on the market is able to implement the actual maximum approach specified in 6.2.3, 8.4 and Clause B.9.

Documents
Document Sharing Hub
© Standards Australia Limited/Standards New Zealand 2023
Full document details: AS NZS IEC 62232-2023

6.1.5.2 Establishing compliance boundary using RF field strength or power density measurements

Compliance boundaries specified in 6.1.4 shall be generated by measuring the RF field strength in suitable directions with respect to the transmitting antenna (e.g. front, back, side, and above and below). Then the obtained RF field strength shall be compared with the applicable RF exposure limits (RF field strength or power density), see B.4.3. Scaling is applicable as specified in 6.1.5.3.

6.1.5.3 Establishing compliance boundary using SAR measurements

Compliance boundaries specified in 6.1.4 shall be generated by measuring SAR for suitable antenna orientations as a function of distance using the measurement procedure in Clause B.5 and by comparing the results with the applicable exposure limits. Compliance distances for different power levels shall be obtained by use of linear scaling of the SAR versus separation distance curve as illustrated in Figure 6.

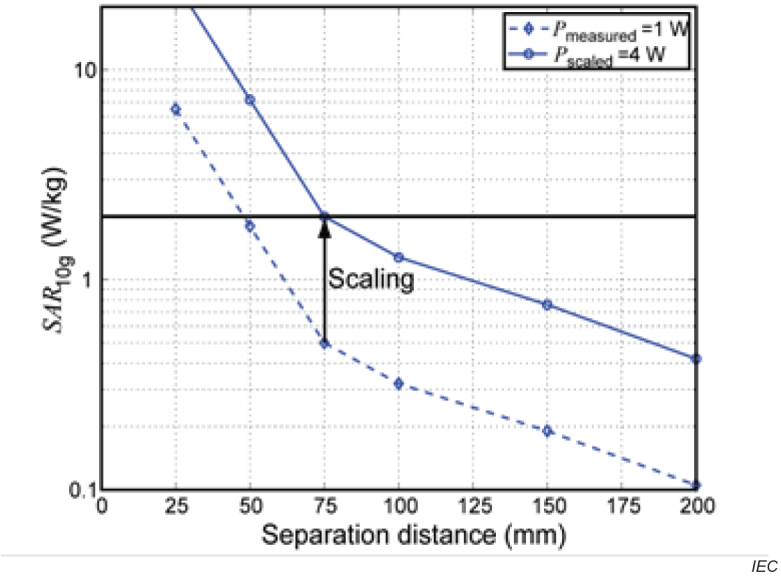

NOTE Scaling to determine the compliance distance at a power level of 4 W, when the SAR measurements were performed at a power level of 1 W for a peak spatial-average SAR (psSAR) exposure limit of 2 W kg^{-1} over an averaging mass of 10 g.

Figure 6 – Example illustrating the linear scaling procedure

The scaled SAR values are computed from the measured values by multiplying the measured values with the ratio between the scaled and the measured power levels. The compliance distance is then obtained from the figure by determining where the scaled SAR curve intersects with the pertinent SAR limit value.

6.1.5.4 Establishing compliance boundary using cylindrical and spherical formulas

The power density or RF field strength shall be calculated in a region surrounding the BS antenna using the basic computation methods specified in B.3.1 and Clause B.6. Based on this evaluation, compliance boundaries in the form of various solids as described in 6.1.4 (cylinder or box) can be determined.

Alternatively, the advanced computation methods described in Clause B.7 can be used to obtain an iso-surface compliance boundary by using the applicable RF exposure limit as the iso-surface value. Simpler and more conservative compliance boundaries can be obtained by inscribing the obtained iso-surface within various solids as discussed in 6.1.4.

Documents
Document Sharing Hub

© Standards Australia Limited/Standards New Zealand 2023

Full document details: AS NZS IEC 62232-2023