AS/NZS ISO 13666:2020
ISO 13666:2019

Australian/New Zealand Standard™

# Ophthalmic optics — Spectacle lenses — Vocabulary

Documents
Document Sharing Hub

AS/NZS ISO 13666:2020

This Joint Australian/New Zealand Standard™ was prepared by Joint Technical Committee MS-024, Optics and Ophthalmics. It was approved on behalf of the Council of Standards Australia on 23 July 2020 and by the New Zealand Standards Approval Board on 5 August 2020.

This Standard was published on 21 August 2020.

The following are represented on Committee MS-024:

Australian Dispensing Opticians Association
Cornea & Contact Lens Society of Australia
Medical Technology Association of Australia
New Zealand Association of Optometrists
Optical Distributors and Manufacturers Association of Australia
Optometrists and Dispensing Opticians Board
Optometry Australia
Queensland University of Technology
The University of Melbourne
The University of New South Wales
Therapeutic Goods Administration

This Standard was issued in draft form for comment as DR AS/NZS ISO 13666:2020.

**Keeping Standards up-to-date**

Ensure you have the latest versions of our publications and keep up-to-date about Amendments, Rulings, Withdrawals, and new projects by visiting:

www.standards.org.au

www.standards.govt.nz

ISBN 978 1 76072 952 3

Documents
Document Sharing Hub

Full document details: AS NZS ISO 13666-2020

AS/NZS ISO 13666:2020
ISO 13666:2019

Australian/New Zealand Standard™

# Ophthalmic optics — Spectacle lenses — Vocabulary

Originated as AS/NZS ISO 13666:2011.
Previous edition 2015.
Third edition 2020.

**COPYRIGHT**

© ISO 2020 — All rights reserved
© Standards Australia Limited/the Crown in right of New Zealand, administered by the New Zealand Standards Executive 2020

All rights are reserved. No part of this work may be reproduced or copied in any form or by any means, electronic or mechanical, including photocopying, without the written permission of the publisher, unless otherwise permitted under the Copyright Act 1968 (Cth) or the Copyright Act 1994 (New Zealand).

Documents
Document Sharing Hub

Full document details: AS NZS ISO 13666-2020

# Preface

This Standard was prepared by the Joint Standards Australia/Standards New Zealand Committee MS-024, Optics and Ophthalmics, to supersede AS/NZS ISO 13666:2015, *Ophthalmic optics — Spectacle lenses — Vocabulary*.

The objective of this document is to define terms relating to ophthalmic optics, specifically to blanks, finished spectacle lenses and fitting purposes.

Terms relating to processes and material for fabrication and surface treatment (other than some specific terms relating to coatings), and terms relating to defects in materials and after optical processing are given in ISO 9802.

This document is identical with, and has been reproduced from, ISO 13666:2019, *Ophthalmic optics — Spectacle lenses — Vocabulary.*

As this document has been reproduced from an International Standard, a full point substitutes for a comma when referring to a decimal marker.

Australian or Australian/New Zealand Standards that are identical adoptions of international normative references may be used interchangeably. Refer to the online catalogue for information on specific Standards.

The terms "normative" and "informative" are used in Standards to define the application of the appendices or annexes to which they apply. A "normative" appendix or annex is an integral part of a Standard, whereas an "informative" appendix or annex is only for information and guidance.

Documents
Document Sharing Hub

© Standards Australia Limited/Standards New Zealand 2020

Full document details: AS NZS ISO 13666-2020

# Contents

**Preface** ii

**Foreword** iv

**Introduction** vii

**1 Scope** 1

**2 Normative references** 1

**3 Terms and definitions** 1

3.1 Basic optics 1
3.2 Lenses and their dispensing 4
3.3 Lens materials 14
3.4 Lens surfaces 15
3.5 Classification according to function 17
3.6 Classification according to form 18
3.7 Classification according to type of lens 19
3.8 Classification according to state of manufacture 20
3.9 Measurement of dioptric properties of lenses 22
3.10 Focal properties 24
3.11 Prismatic properties 28
3.12 Spherical-power lenses 30
3.13 Astigmatic-power lenses 30
3.14 Lenticular lenses 32
3.15 General descriptive terms for multifocal and power-variation lenses 33
3.16 Optical centration and focal properties of multifocal and power-variation lenses 37
3.17 Transmittance, reflectance and polarization 39
3.18 Coatings 46

**Annex A** (informative) **Spectral weighting functions and spectral distributions** 48

**Bibliography** 59

**Alphabetical index** 60

Documents
Document Sharing Hub

Full document details: AS NZS ISO 13666-2020

# Foreword

ISO (the International Organization for Standardization) is a worldwide federation of national standards bodies (ISO member bodies). The work of preparing International Standards is normally carried out through ISO technical committees. Each member body interested in a subject for which a technical committee has been established has the right to be represented on that committee. International organizations, governmental and non-governmental, in liaison with ISO, also take part in the work. ISO collaborates closely with the International Electrotechnical Commission (IEC) on all matters of electrotechnical standardization.

The procedures used to develop this document and those intended for its further maintenance are described in the ISO/IEC Directives, Part 1. In particular, the different approval criteria needed for the different types of ISO documents should be noted. This document was drafted in accordance with the editorial rules of the ISO/IEC Directives, Part 2 (see www.iso.org/directives).

Attention is drawn to the possibility that some of the elements of this document may be the subject of patent rights. ISO shall not be held responsible for identifying any or all such patent rights. Details of any patent rights identified during the development of the document will be in the Introduction and/or on the ISO list of patent declarations received (see www.iso.org/patents).

Any trade name used in this document is information given for the convenience of users and does not constitute an endorsement.

For an explanation of the voluntary nature of standards, the meaning of ISO specific terms and expressions related to conformity assessment, as well as information about ISO's adherence to the World Trade Organization (WTO) principles in the Technical Barriers to Trade (TBT) see www.iso.org/iso/foreword.html.

This document was prepared by Technical Committee ISO/TC 172 *Optics and photonics*, Subcommittee 7, *Ophthalmic optics and instruments.*

This third edition cancels and replaces the second edition (ISO 13666:2012), which has been technically revised.

The main changes compared to the previous edition are as follows:

— Since the document is for spectacle lens terminology, the single word “lens” rather than “spectacle lens” is used throughout the document.

— This revision has resulted in a few terms that were no longer used in lens standards or in communications between participants in the lens manufacturing and dispensing chain being deleted. The terms that were in clause 17 have been either moved or incorporated into earlier terms.

— Over 50 % of terms and definitions have been revised. In some cases, this is as little as changing the order of synonyms for the term, to significant changes in the wording of definitions or notes to entry, but without change of meaning.

— The meaning of vertex distance has been altered so that it now refers to the horizontal distance between the back surface of the lens and the apex of the cornea, measured with the eyes in the primary position. The plane of the lens shape is now defined as being the plane containing the vertical centreline parallel to the horizontal centreline of the individual lens based on the apex of the groove instead of being based on the plane tangential to the demonstration lens. The design reference points are where the manufacturer's specifications apply, while the reference points are where the lenses are to be verified. For single-vision and most multifocal lenses, these are the same. The previous distinction for a multifocal lens, where the distance design reference point was usually the centre of the semi-finished lens blank (now called simply "blank") while the distance reference point was usually the intended position of the optical centre of the distance portion after surfacing, has been removed — they are the design reference point or simply the reference points of the blank and the finished lens.

© Standards Australia Limited/Standards New Zealand 2020

Documents
Document Sharing Hub

Full document details: AS NZS ISO 13666-2020

— The term "*as-worn" corrected dioptric power* has been replaced by the term *verification power* — this word explains its purpose better, and is clarified by a new definition. Shape magnification has been replaced by the more general *spectacle magnification.*

— The following additional terms have been added:

  — as-worn pantoscopic angle;

  — centration point position;

  — darkened state;

  — degressive-power blank;

  — distance power;

  — faded state;

  — fused multifocal lens;

  — infrared transmittance;

  — lens shape;

  — mean sphere;

  — near power;

  — near reference point;

  — ordered distance prismatic effect;

  — ordered near prismatic effect;

  — ordered power;

  — ordered prismatic effect;

  — position-specific single-vision lens;

  — power-variation blank;

  — power-variation lens;

  — power-variation surface;

  — presbyopia;

  — prescribed power;

  — primary reference point;

  — reference point;

  — secondary reference point;

  — segment bottom;

  — segment top;

  — solar blue-light transmittance;

  — spectacle magnification;

  — spherical equivalent power;

© Standards Australia Limited/Standards New Zealand 2020

Documents
Document Sharing Hub

Full document details: AS NZS ISO 13666-2020

— traffic signal light;

— ultraviolet transmittance;

— variation power;

— verification power.

Any feedback or questions on this document should be directed to the user's national standards body. A complete listing of these bodies can be found at www.iso.org/members.html.

© Standards Australia Limited/Standards New Zealand 2020

Documents
Document Sharing Hub

Full document details: AS NZS ISO 13666-2020

# Introduction

This new edition of ISO 13666 has been prepared in line with the new provisions of ISO/IEC Directives, Part 2. This led to a renumbering of all terms. All the terms are now in Clause 3, “Terms and definitions”, so the previous subsections have been made into full subclauses to simplify the numbering. "Notes" have been replaced by "notes to entry" — these can be normative, as opposed to notes in specification standards which are informative.

General considerations in the interpretation of this vocabulary document are:

— since this document relates to spectacle lenses, the simple word 'lens' or 'lenses' is generally used throughout (except where definitions have been quoted from other standards) instead of 'spectacle lens' or 'spectacle lenses'. The term "spectacle lens" is defined in 3.5.2. When “lens” means a lens in general, including but not restricted to spectacle lenses, it is not italicized in the text. When “lens” means a spectacle lens, the word “lens” is put in italics.

— the unit of focusing power, expressed in reciprocal metres ($m^{-1}$), of a lens or surface is the dioptre. See 3.10.1 for a complete definition;

— the unit of prismatic power is the prism dioptre (Δ), expressed in centimetres per metre (cm/m). See 3.11.11 for a complete definition;

— to simplify definitions and the understanding of the optics of ophthalmic lenses, aberrations of lenses and prisms are ignored in definitions except when specifically mentioned;

— definitions are classified according to subject;

— deprecated: Some obsolete terms are listed for convenience, but are indicated as "DEPRECATED" and should not be used;

— in this document, the word "normal" (to a surface) means a line that is at 90° to the plane that is tangential to the surface at the point of interest, i.e. is perdendicular to the surface at that point.

© Standards Australia Limited/Standards New Zealand 2020

Documents Document Sharing Hub

Full document details: AS NZS ISO 13666-2020

NOTES

Documents
Document Sharing Hub

Full document details: AS NZS ISO 13666-2020

# Australian/New Zealand Standard

## Ophthalmic optics — Spectacle lenses — Vocabulary

## 1 Scope

This document defines terms relating to ophthalmic optics, specifically to blanks, finished spectacle lenses and fitting purposes.

Terms relating to processes and material for fabrication and surface treatment (other than some specific terms relating to coatings), and terms relating to defects in materials and after optical processing are given in ISO 9802.

## 2 Normative references

There are no normative references in this document.

## 3 Terms and definitions

For the purposes of this document, the following terms and definitions apply.

ISO and IEC maintain terminological databases for use in standardization at the following addresses:

— ISO Online browsing platform: available at https://www.iso.org/obp

— IEC Electropedia: available at http://www.electropedia.org/

NOTE CIE International Lighting Vocabulary CIE S 017: 2011 is available at http://eilv.cie.co.at/.

### 3.1 Basic optics

**3.1.1**
**optical radiation**
electromagnetic radiation at wavelengths between the region of transition to X-rays ($\lambda \approx 1$ nm) and the region of transition to radio waves ($\lambda \approx 1$ mm)

[SOURCE: CIE S 017:2011, 17-848]

**3.1.2**
**visible radiation**
**light**
any *optical radiation* (3.1.1) capable of causing a visual sensation directly

Note 1 to entry: The limits of photo-detection depend upon the amount of radiant power reaching the retina and the responsivity of the observer.

Note 2 to entry: ISO 20473 specifies the spectral range of *visible radiation* to have a lower limit of 380 nm and an upper limit of 780 nm for application to Optics and Photonics standards. These limits apply to *spectacle lens* (3.5.2) standards.

[SOURCE: CIE S 017:2011, 17-1402, modified — the note has been deleted, while notes 1 and 2 to entry have been added.]

**3.1.3**
**ultraviolet radiation**
DEPRECATED: ultraviolet
*optical radiation* (3.1.1) for which the wavelengths are shorter than those for *visible radiation* (3.1.2)

Note 1 to entry: ISO 20473 specifies the spectral range of *ultraviolet radiation* for the application to Optics and Photonics standards and subdivides the UV range into:

© Standards Australia Limited/Standards New Zealand 2020

Documents Document Sharing Hub

Full document details: AS NZS ISO 13666-2020

— UV-A: 315 nm to 380 nm;

— UV-B: 280 nm to 315 nm;

— UV-C: 100 nm to 280 nm.

Other health and safety disciplines define UV-A as 315 nm to 400 nm.

[SOURCE: CIE S 017:2011, 17-1367, modified —The notes have been deleted while note 1 to entry has been added.]

**3.1.4**
**infrared radiation**
DEPRECATED: infrared
*optical radiation* (3.1.1) for which the wavelengths are longer than those for *visible radiation* (3.1.2), from 780 nm to 1 mm

Note 1 to entry: For *infrared radiation*, the range between 780 nm and 1 mm is commonly subdivided into:

— IR-A: 780 nm to 1 400 nm;

— IR-B: 1,4 µm to 3 µm;

— IR-C: 3 µm to 1 mm.

Note 2 to entry: These limits are also specified in ISO 20473.

Note 3 to entry: The solar *infrared radiation* spectrum at sea level extends to about 2 000 nm.

Note 4 to entry: The range of *infrared radiation* emitted by the source and reaching the *lens* shall be considered in the design of an *infrared radiation*-absorbing material.

[SOURCE: CIE S 017:2011, 17-580, modified — Notes 2, 3 and 4 to entry have been added.]

**3.1.5**
**refractive index**
$n(\lambda)$
ratio of the velocity of propagation of monochromatic radiation of the wavelength ($\lambda$) in vacuum to its velocity of propagation in the medium

Note 1 to entry: For technical applications, the *refractive index* is given against air instead of against vacuum.

Note 2 to entry: The wavelengths to be used for the characterization of *optical materials* (3.3.1), all kinds of optical systems and instruments, and *spectacle lenses* (3.5.2), are specified in ISO 7944.

**3.1.6**
**chromatic dispersion**
change in the *refractive index* (3.1.5) of monochromatic radiation in a medium as a function of the frequency of the radiation

Note 1 to entry: The *chromatic dispersion* gives rise to chromatic aberration in a lens made from dispersive materials.

**3.1.7**
**Abbe number**
$\upsilon_d$, $\upsilon_e$
DEPRECATED: constringence
DEPRECATED: V-value
indicator of the *chromatic dispersion* (3.1.6) of an *optical material* (3.3.1) or component

Note 1 to entry: The *Abbe number* can be calculated as either:

© Standards Australia Limited/Standards New Zealand 2020

Documents
Document Sharing Hub

Full document details: AS NZS ISO 13666-2020

$$\upsilon_d = \frac{n_d - 1}{n_F - n_C}$$

where

$n_d$ is the *refractive index* of the yellow helium d-line (wavelength: 587,56 nm);

$n_F$ is the *refractive index* of the blue hydrogen F-line (wavelength: 486,13 nm); and

$n_C$ is the *refractive index* of the red hydrogen C-line (wavelength: 656,27 nm);

or

$$\upsilon_e = \frac{n_e - 1}{n_{F'} - n_{C'}}$$

where

$n_e$ is the *refractive index* of the green mercury e-line (wavelength: 546,07 nm);

$n_{F'}$ is the *refractive index* of the blue cadmium F′-line (wavelength: 479,99 nm); and

$n_{C'}$ is the *refractive index* of the red cadmium C′-line (wavelength: 643,85 nm).

Note 2 to entry: These reference wavelengths are given in ISO 7944:1998.

**3.1.8**
**optical axis**
straight line joining the centres of curvature of both surfaces of a *lens* (3.5.2)

Note 1 to entry: This line is normal to both optical surfaces so light can pass along it undeviated.

Note 2 to entry: For *lenses* (3.5.2) with strong *prismatic power* (3.11.10), the *optical axis* can lie outside the area of the *lens*.

Note 3 to entry: *Power-variation lenses* (3.7.7) do not have a true *optical axis*.

**3.1.9**
**vertex**
point of intersection of the *optical axis* (3.1.8) with a surface of a *lens* (3.5.2)

**3.1.10**
**power**
capacity of a *lens* (3.5.2) or optical surface to change the curvature or direction of incident wavefronts by refraction

**3.1.11**
**focal point**
image point conjugate to an infinitely distant object point on the *optical axis* (3.1.8)

**3.1.12**
**bioactinic**
exhibiting or referring to *bioactinism* (3.1.13)

**3.1.13**
**bioactinism**
property of *optical radiation* (3.1.1) that enables it to cause chemical changes to biological tissues

© Standards Australia Limited/Standards New Zealand 2020

Documents Document Sharing Hub

Full document details: AS NZS ISO 13666-2020

**3.1.14**
**presbyopia**
reduction in the ability to accommodate through normal ageing, resulting in the inability to focus at usual near distances with any ametropia corrected

## 3.2 Lenses and their dispensing

**3.2.1**
**boxed lens system**
**boxing system**
system of measurement and definitions based on the rectangle formed by the horizontal and vertical tangents to the extremities of the *lens shape* (3.2.2)

Note 1 to entry: Because the horizontal and vertical tangents might not be in the same plane, for a *lens* (3.5.2) this can be thought of as an orthogonal projection onto a plane parallel to the *front surface* (3.2.13) at its *boxed centre* (3.2.5).

**3.2.2**
**lens shape**
outline of the *edged lens* (3.8.9) periphery in its intended orientation

Note 1 to entry: The nasal side should be indicated.

Note 2 to entry: *Lens shape* refers to the shape of *lenses* (3.5.2) that fit the frame with:

— for a *lens* having a bevelled edge, the outermost edge of the *lens*, the *lens* having a bevel which includes a symmetrical angle of 120° and a bevel width greater than the width of the groove in the front;

— for a *lens* having a flat or grooved edge, the outermost edge of the *lens*.

**3.2.3**
**horizontal centreline**
horizontal straight line located at an equal distance from the two horizontal tangents of the *boxed lens system* (3.2.1)

[SOURCE: ISO 8624:2011, A.1, modified — The words "horizontal straight" have been added and the word "(boxing)" has been deleted.]

**3.2.4**
**vertical centreline**
vertical straight line located at an equal distance from the vertical sides of the rectangular box that circumscribes the *lens shape* (3.2.2)

[SOURCE: ISO 8624:2011, A.2, modified — The words "vertical straight" have been added and the word "which" has been changed to "that".]

**3.2.5**
**boxed centre**
C
intersection of the *horizontal centreline* (3.2.3) and the *vertical centreline* (3.2.4) of the rectangular box that circumscribes the *lens shape* (3.2.2)

Note 1 to entry: This term is applied to spectacle frames and to the *edged lens* (3.8.9).

[SOURCE: ISO 8624:2011, 2.1, modified — The word "which" has been replaced by "that" and note 1 to entry has been added.]

**3.2.6**
**geometrical centre**
**geometric centre**
intersection of the *horizontal centreline* (3.2.3) and *vertical centreline* (3.2.4) of the rectangular box that circumscribes the shape of the *blank* (3.8.1) or *uncut lens* (3.8.8)

© Standards Australia Limited/Standards New Zealand 2020

Documents
Document Sharing Hub

Full document details: AS NZS ISO 13666-2020

**3.2.7**
**nominal size**
$d_n$
dimension indicated by the manufacturer

Note 1 to entry: For round *blanks* (3.8.1) or *lenses* (3.5.2), the size is given as the diameter. Otherwise, the horizontal and vertical dimensions are given.

**3.2.8**
**effective size**
$d_e$
actual physical dimension

Note 1 to entry: For round *blanks* (3.8.1) or *lenses* (3.5.2), the size is given as the diameter. Otherwise, the horizontal and vertical dimensions are given.

**3.2.9**
**usable size**
$d_u$
dimension of the area that is optically usable

Note 1 to entry: For round *blanks* (3.8.1) or *lenses* (3.5.2), the size is given as the diameter. Otherwise, the horizontal and vertical dimensions are given.

**3.2.10**
**horizontal axis**
zero direction through a *reference point* (3.2.19) on the *lens* (3.5.2) for the specification of *cylinder axes* (3.13.8) and *prism base settings* (3.11.7) as defined in ISO 8429

**3.2.11**
**meridian**
<surface> each plane that contains the centre(s) of curvature of the surface

Note 1 to entry: See also *principal meridians* (3.4.5).

**3.2.12**
**meridian**
<*lens*> each plane that contains the *optical axis* (3.1.8) of the *lens* (3.5.2)

**3.2.13**
**front surface**
surface of the *lens* (3.5.2) intended to be fitted away from the eye

**3.2.14**
**back surface**
surface of the *lens* (3.5.2) intended to be fitted nearer to the eye

**3.2.15**
**optical centre**
intersection of the *optical axis* (3.1.8) with the *front surface* (3.2.13) of a *lens* (3.5.2)

**3.2.16**
**design reference point**
point, stipulated by the manufacturer, on the finished surface of a *blank* (3.8.1) or on the *front surface* (3.2.13) of the *finished lens* (3.8.7) at which the design specifications apply

EXAMPLE *Distance design reference point* and *near design reference point*.

© Standards Australia Limited/Standards New Zealand 2020

Documents Document Sharing Hub

Full document details: AS NZS ISO 13666-2020

**3.2.17**
**distance design reference point**
point, stipulated by the manufacturer, on the *front surface* (3.2.13) of a *finished lens* (3.8.7) or on the finished surface of a *blank* (3.8.1) at which the design specifications for the *distance portion* (3.15.1) apply

**3.2.18**
**near design reference point**
point, stipulated by the manufacturer, on the *front surface* (3.2.13) of a *finished lens* (3.8.7) or on the finished surface of a *blank* (3.8.1) at which the design specifications for the *near portion* (3.15.3) apply

**3.2.19**
**reference point**
point, stipulated by the manufacturer, on the *front surface* (3.2.13) of a *finished lens* (3.8.7) or on the finished surface of a *blank* (3.8.1) at which the *verification power* (3.10.15) of a specific portion applies

Note 1 to entry: Unless a *verification power* (3.10.15) is stated, the power is the nominal or *ordered power* (3.10.14). See note 3 to entry to *verification power*.

Note 2 to entry: This point can, in some circumstances, differ from the respective *design reference point* (3.2.16).

Note 3 to entry: For *power-variation lenses* (3.7.7), *focal power* (3.10.2) and *prismatic power* (3.11.10) are measured at different *reference points*.

EXAMPLE *Distance reference point* and *near reference point*.

**3.2.20**
**distance reference point**
**major reference point**
point on the *front surface* (3.2.13) of the *lens* (3.5.2) at which the *verification power* (3.10.15) for the *distance portion* (3.15.1) applies

Note 1 to entry: This point can, in some circumstances, be different from the *distance design reference point* (3.2.17).

Note 2 to entry: Unless a *verification power* (3.10.15) is stated, the power is the nominal or *ordered power* (3.10.14). See note 3 to entry to *verification power*.

**3.2.21**
**near reference point**
point on the *front surface* (3.2.13) of the *lens* (3.5.2) at which the *verification power* (3.10.15) for the *near portion* (3.15.3) applies

Note 1 to entry: This point can, in some circumstances, be different from the *near design reference point* (3.2.18).

Note 2 to entry: Unless a *verification power* (3.10.15) is stated, the power is the nominal or *ordered power* (3.10.14). See note 3 to entry to *verification power*.

**3.2.22**
**primary reference point**
point on the *front surface* (3.2.13) of a *power-variation lens* (3.7.7) at which the *verification power* (3.10.15) for the designed primary use of the *lens* (3.5.2) applies

Note 1 to entry: All *power-variation lenses* have a *primary reference point*.

Note 2 to entry: For example, the *primary reference point* for a *progressive-power lens* (3.7.8) is the *distance reference point* (3.2.20) and for a *degressive-power lens* (3.7.9) is the *near reference point* (3.2.21).

[SOURCE: ISO 21987:2017, 3.5]

© Standards Australia Limited/Standards New Zealand 2020

Documents
Document Sharing Hub

Full document details: AS NZS ISO 13666-2020

**3.2.23**
**secondary reference point**
point on the *front surface* (3.2.13) of a *power-variation lens* (3.7.7) at which the *verification power* (3.10.15) for the designed secondary use of the *lens* (3.5.2) applies

Note 1 to entry: Some *power-variation lenses* (3.7.7) can have a *secondary reference point* that is used for the determination of the *addition power* (3.16.3) or *variation power* (3.16.4).

Note 2 to entry: For example, the *secondary reference point* for a *progressive-power lens* (3.7.8) is the *near reference point* (3.2.21).

[SOURCE: ISO 21987:2017, 3.6]

**3.2.24**
**line of sight** en: US
**visual axis** en: GB
ray path from the point of interest (i.e. point of fixation) in object space to the centre of the entrance pupil of the eye and its continuation in image space from the centre of the exit pupil to the retinal point of fixation (generally the foveola)

Note 1 to entry: These two parts of the ray path are distinct and separate segments.

**3.2.25**
**primary direction**
direction of the *line of sight* (3.2.24), usually taken to be the horizontal, to an object at an infinite distance measured with habitual head and body posture when looking straight ahead in unaided vision

**3.2.26**
**primary position**
position of the eye when looking in the *primary direction* (3.2.25)

**3.2.27**
**visual point**
point of intersection of the *line of sight* (3.2.24) with the *back surface* (3.2.14) of a *lens* (3.5.2)

**3.2.28**
**interpupillary distance**
**PD**
distance between the centres of the pupils when the eyes are in the *primary position* (3.2.26)

**3.2.29**
**monocular pupillary distance**
distance between the centre of the pupil and the mid-line of the bridge of the nose or the spectacle frame when the eye is in the *primary position* (3.2.26)

**3.2.30**
**centration point**
**CP**
point with respect to the frame at which the *optical centre* (3.2.15), *distance reference point* (3.2.20) or *fitting point* (3.2.34) is to be located in the absence of any *ordered prismatic effect* (3.11.14) and any *prism thinning* (3.16.9), or after any such *prismatic effect* (3.11.9) has been neutralized

Note 1 to entry: Which of these is relevant depends upon the type of *lens* (3.5.2), for example, the *optical centre* (3.2.15) usually applies to a *single-vision lens* (3.7.1), *distance reference point* (3.2.20) usually to an *aspheric lens* (3.6.8) or *multifocal lens* (3.7.3) and *fitting point* (3.2.34) usually to a *position-specific single-vision lens* (3.7.2) or a *power-variation lens* (3.7.7).

Note 2 to entry: When a *lens* incorporates *prismatic power* (3.11.10), a correction should be made to the position of the *centration point (*monocular *centration distance* (3.2.31) and centration point height) when mounting the *lens* to compensate for the change in position of the eye. This correction depends on the power of the prismatic correction needed and the *as-worn position* (3.2.36). This correction may be done when ordering the *lenses* or be done by the manufacturer.

© Standards Australia Limited/Standards New Zealand 2020

Documents
Document Sharing Hub

Full document details: AS NZS ISO 13666-2020

Note 3 to entry: This point can be specified:

— in the *plane of the lens shape* (3.2.41), by its horizontal ($u$) and vertical ($v$) *decentrations* (3.2.33) from the *boxed centre* (3.2.5);

— in the *plane of the lens shape*, by its horizontal distance ($x$) from the nasal vertical tangent of the *boxed lens system* (3.2.1) and its centration height ($y$) above the lower horizontal tangent;

— in the *plane of the spectacle front* (3.2.42), by its monocular *centration distance* ($z$) and centration height ($y$) above the lower horizontal tangent.

For details and sign convention, see Figures 1 and 2.

Note 4 to entry: With the horizontal, $a$, and vertical, $b$, boxed lens sizes, the distances mentioned in note 3 to entry can be computed as $u = x - a/2$ and $v = y - b/2$ respectively.

Note 5 to entry: With *face form angle* α and the *boxed centre distance c*, the following relation between $u$ and the monocular *centration distance z* applies:

$$u = \frac{c - 2z}{2\cos\alpha}$$

where $u$ is positive if the *centration point* is nasal relative to the *vertical centreline* (3.2.4).

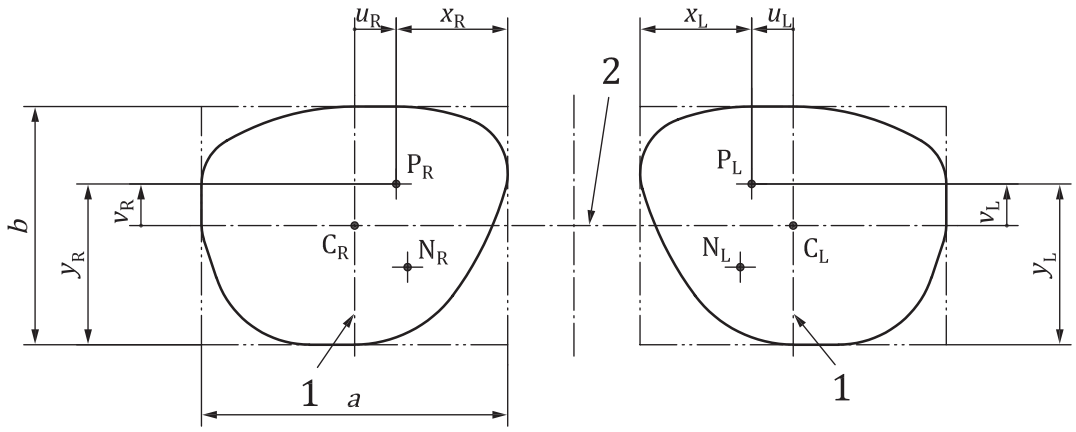


**Key**

| | |
|---|---|
| 1 | *vertical centreline* |
| 2 | *horizontal centreline* |
| $C_R$ $C_L$ | right/left *boxed centre* |
| $P_R$ $P_L$ | right/left *centration point* |
| $N_R$ $N_L$ | right/left *near visual point* |
| $x_R$ $x_L$ | horizontal distance of right/left *centration point* |
| $y_R$ $y_L$ | right/left *centration point height/fitting point height* |
| $u_R$ $u_L$ | horizontal *decentration* of the right/left *centration point position/fitting point position* |
| $v_R$ $v_L$ | vertical *decentration* of right/left *centration point position/fitting point position* |
| $a$ | horizontal boxed lens size |
| $b$ | vertical boxed lens size |

**Figure 1 — Terms relating to the centration/fitting point, measured in the planes of the lens shapes**

© Standards Australia Limited/Standards New Zealand 2020

Documents
Document Sharing Hub
Full document details: AS NZS ISO 13666-2020

**3.2.31**
**centration distance**
**CD**
required horizontal distance between the *centration points* (3.2.30) of a pair of mounted *lenses* (3.5.2)

Note 1 to entry: The *centration distance* can be specified by monocular values, measured from the assumed centreline of the bridge of the spectacle frame, i.e. the spectacle frame's vertical symmetry axis.

Note 2 to entry: For distance vision, in the absence of any horizontal *prismatic effect* (3.11.9), the *interpupillary distance* (3.2.28) can be taken to be the *centration distance*. For intermediate and near prescriptions, the *centration distance* needs to be adjusted for binocular convergence.

Note 3 to entry: See *z* in Figure 2.

**3.2.32**
**optical centre distance**
**OCD**
**distance between centres**
DEPRECATED: optical PD
horizontal distance between the *optical centres* (3.2.15) of a pair of mounted *lenses* (3.5.2), with any *ordered prismatic effect* (3.11.14) being neutralized

Note 1 to entry: The *optical centre distance* is not applicable to *power-variation lenses* (3.7.7).

**3.2.33**
**decentration**
displacement of the *centration point* (3.2.30) from the *boxed centre* (3.2.5) of the shape of the *edged lens* (3.8.9)

Note 1 to entry: See *u* and *v* in Figure 1.

© Standards Australia Limited/Standards New Zealand 2020

Documents
Document Sharing Hub
Full document details: AS NZS ISO 13666-2020

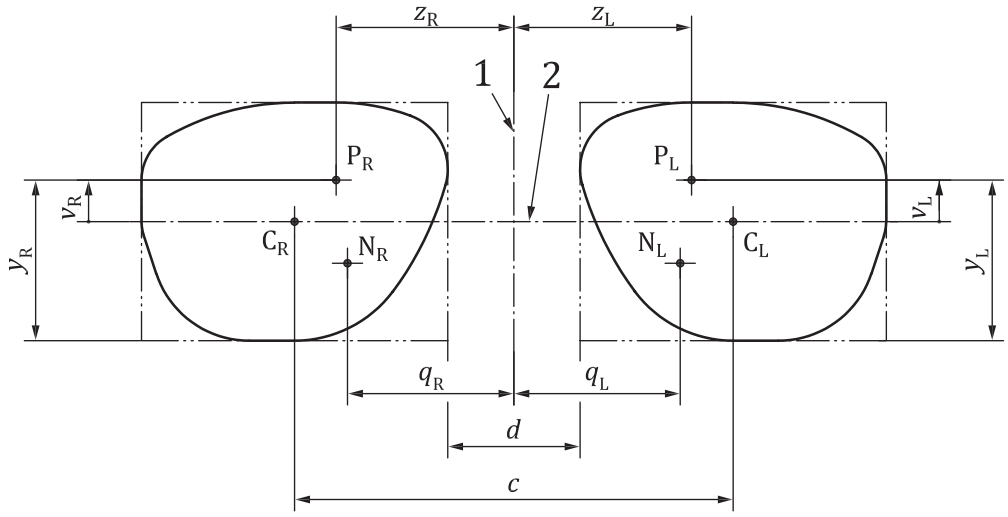


**Key**

| | |
|---|---|
| 1 | vertical symmetry axis |
| 2 | *horizontal centreline* |
| $C_R$ $C_L$ | right/left *boxed centre* |
| $P_R$ $P_L$ | right/left *centration point* |
| $N_R$ $N_L$ | right/left *near visual point* |
| $z_R$ $z_L$ | right/left monocular *centration distance* |
| $q_R$ $q_L$ | right/left monocular near *visual point* distance |
| $y_R$ $y_L$ | right/left *centration point height/fitting point height* |
| $v_R$ $v_L$ | vertical *decentration* of right/left *centration point* |
| $c$ | boxed centre distance |
| $d$ | distance between lenses |

**Figure 2 — Terms relating to the centration/fitting point, measured in the plane of the spectacle front**

**3.2.34**
**fitting point**
point on the *front surface* (3.2.13) of a *lens* (3.5.2) or *blank* (3.8.1) stipulated by the manufacturer for positioning the *lens* in front of the eye

**3.2.35**
**centration point position**
**fitting point mounting position**
vertical and horizontal fitting distances and directions of the *centration point* (3.2.30) or *fitting point* (3.2.34) respectively from the *boxed centre* (3.2.5), measured in the *plane of the lens shape* (3.2.41)

Note 1 to entry: The *fitting point mounting position* relates to the ordered mounting position in the frame, not the mounted value or the height of the *fitting point* (3.2.34) in relation to the permanent *alignment reference markings* (3.15.25).

Note 2 to entry: See $v_R$, $v_L$, $u_R$ and $u_L$ in Figure 1.

**3.2.36**
**as-worn position**
**position of wear**
position, including orientation, of the *lenses* (3.5.2) relative to the eyes and face during wear

Note 1 to entry: The *as-worn position* shall be measured with the habitual head and body posture. For distance vision, this is usually measured in the *primary position* (3.2.26) when looking straight ahead in unaided vision.

© Standards Australia Limited/Standards New Zealand 2020

AVA Documents Document Sharing Hub
Full document details: AS NZS ISO 13666-2020

**3.2.37**
**as-worn pantoscopic angle**
**position of wear pantoscopic angle**
vertical angle between the horizontal and the perpendicular to a reference line passing through the apex of the grooves of the upper and lower rims of the frame in the vertical plane containing the *primary direction* (3.2.25)

Note 1 to entry: The *as-worn position* (3.2.36) shall be measured with the habitual head and body posture. For distance vision, this is usually measured in the *primary position* (3.2.26) when looking straight ahead in unaided vision.

Note 2 to entry: The angle is regarded as positive if the lower part of the *lens* (3.5.2) lies closer to the face than the upper.

Note 3 to entry: For rimless and semi-rimless frames, a comparable measurement needs to be made.

Note 4 to entry: See Figure 3.

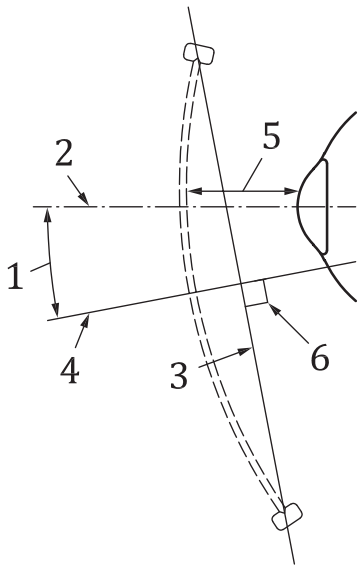


**Key**

1 *as-worn pantoscopic angle*
2 *primary direction*, taken to be horizontal
3 reference line through the apex of the grooves of the rims in a vertical plane passing through the pupil
4 perpendicular to the reference line
5 *vertex distance*
6 right angle (90°)

**Figure 3 — Illustration of as-worn pantoscopic angle and vertex distance**

**3.2.38**
**as-worn face form angle**
**as-worn wrap angle**
**position of wear face form angle**
**position of wear wrap angle**
horizontal angle between the *primary direction* (3.2.25) and the perpendicular to a reference line passing through the apex of the grooves of the nasal and temporal rims of the frame in the horizontal plane containing the *primary direction*

Note 1 to entry: The right or left *as-worn face form angle* is regarded as positive if the temporal side of the *plane of* the right or left *lens shape* (3.2.41) is posterior to the nasal side.

© Standards Australia Limited/Standards New Zealand 2020

Documents Document Sharing Hub

Full document details: AS NZS ISO 13666-2020

Note 2 to entry: The *as-worn position* (3.2.36) shall be measured with the habitual head and body posture. For distance vision, this is usually measured in the *primary position* (3.2.26) when looking straight ahead in unaided vision.

Note 3 to entry: For rimless and semi-rimless frames, a comparable measurement needs to be made.

Note 4 to entry: See Figure 4.

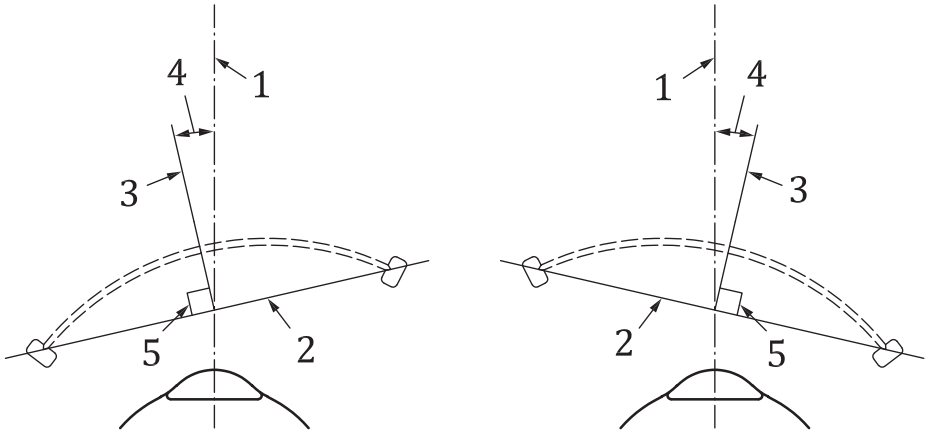


**Key**

1 *primary direction*

2 reference line

3 perpendicular to the reference line

4 right and left *as-worn face form angles*

5 right angle (90°)

**Figure 4 — Illustration of as-worn face form angle**

**3.2.39**
**face form angle**
**wrap angle**
angle between the *plane of the spectacle front* (3.2.42) and the right *plane of the lens shape* (3.2.41) or of the left *plane of the lens shape*

Note 1 to entry: The right or left *face form angle* is regarded as positive if the temporal side of the *plane of the lens shape* (3.2.41) is posterior to the nasal side.

Note 2 to entry: The *face form angles* are often measured and specified as the average of the right and left angles, but the frame can be adjusted for a specific wearer so that they differ, and the right and left angles should then be specified.

Note 3 to entry: This angle relates to the frame, not the *as-worn position* (3.2.36).

Note 4 to entry: See $6_R$ and $6_L$ in Figure 5.

© Standards Australia Limited/Standards New Zealand 2020

Documents
Document Sharing Hub

Full document details: AS NZS ISO 13666-2020

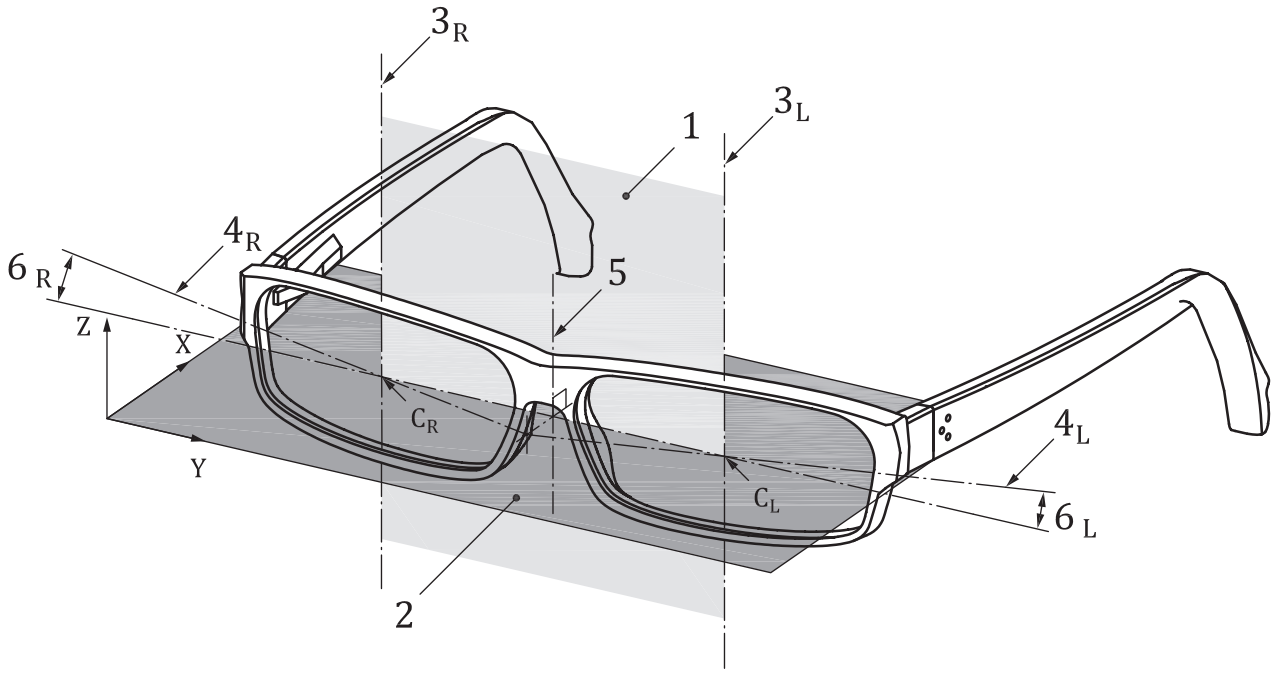


**Key**

| | |
|---|---|
| $C_R$ $C_L$ | right/left *boxed centre* |
| 1 | *plane of the spectacle front* |
| 2 | XY plane, perpendicular to plane 1 |
| $3_R$ $3_L$ | right/left *vertical centrelines* |
| $4_R$ $4_L$ | right/left *horizontal centrelines* |
| 5 | vertical symmetry axis |
| $6_R$ $6_L$ | *face form angle*, measured in plane 2 |

**Figure 5 — 3D schematic representation of the plane of the spectacle front and the planes of the lens shapes of a frame**

**3.2.40**
**vertex distance**
horizontal distance between the *back surface* (3.2.14) of the *lens* (3.5.2) and the apex of the cornea, measured with the eyes in the *primary position* (3.2.26)

Note 1 to entry: See Figure 3.

**3.2.41**
**plane of the lens shape**
plane that contains the *vertical centreline* (3.2.4) and is parallel to the *horizontal centreline* (3.2.3) of the individual *lens* (3.5.2)

Note 1 to entry: The *vertical* (3.2.4) and *horizontal centrelines* (3.2.3) are based on the apex of the groove. For rimless and semi-rimless frames, the centre of the edge of an *afocal lens* (3.6.3) mounted in the frame is to be regarded as equivalent.

Note 2 to entry: See Figure 5.

**3.2.42**
**plane of the spectacle front**
plane that contains the *vertical centrelines* (3.2.4) of the right and left boxed *lens shapes* (3.2.2)

Note 1 to entry: This will be an approximation if the two centrelines are not parallel to each other.

© Standards Australia Limited/Standards New Zealand 2020

Documents Document Sharing Hub

Full document details: AS NZS ISO 13666-2020

Note 2 to entry: See Figure 5.

[SOURCE: ISO 8624:2011, A.11, modified — Note 2 to entry has been added.]

**3.2.43**
**working distance**
distance from the reference plane to the object plane

Note 1 to entry: By ophthalmic convention, this reference plane is usually taken to be *the plane of the spectacle front* (3.2.42).

**3.2.44**
**near vision distance**
*working distance* (3.2.43) with the individual's habitual near working plane as the object plane

Note 1 to entry: This is generally taken as the distance, often 40 cm, at which a person reads, but the task could equally be sewing or fine assembly.

**3.2.45**
**intermediate vision distance**
*working distance* (3.2.43) with the object plane situated further than the *near vision distance* (3.2.44) and closer than far vision distance or *indoor vision distance* (3.2.46)

Note 1 to entry: Typical examples are the distance to display screen equipment or the far side of a desk, usually in the range of 50 cm to 120 cm, but this can vary widely.

**3.2.46**
**indoor vision distance**
**room distance**
*working distance* (3.2.43) usually taken to be between 1,5 m and 4,0 m

**3.2.47**
**centre thickness**
thickness of a *blank* (3.8.1) or *lens* (3.5.2) at its *reference point* (3.2.19), measured normal to the *front surface* (3.2.13)

**3.2.48**
**edge thickness**
thickness at a point on the edge of a *blank* (3.8.1), *uncut lens* (3.8.8) or *edged lens* (3.8.9)

Note 1 to entry: The *edge thickness* of a *blank* (3.8.1) is usually measured parallel to the normal to the *front surface* (3.2.13) at its *geometrical centre* (3.2.6), of a *finished lens* (3.8.7) approximately normal to the surface at the measurement point.

Note 2 to entry: *Astigmatic-power* (3.13.1), *power-variation* (3.7.7) and *prismatic-power lenses* (3.1.12) will generally have a variable *edge thickness*.

Note 3 to entry: The measurement point for a *blank* is the point specified by the manufacturer; for measurement of a *finished lens* it is the thinnest part of the edge.

## 3.3 Lens materials

**3.3.1**
**optical material**
transparent material capable of being manufactured into optical components

© Standards Australia Limited/Standards New Zealand 2020

Documents
Document Sharing Hub

Full document details: AS NZS ISO 13666-2020

**3.3.2**
**glass**
**inorganic glass**
**mineral glass**
material formed by the fusion of inorganic substances, cooled down and solidified without crystallizing

Note 1 to entry: Terms describing types of optical *glass* are given in ISO 9802.

**3.3.3**
**thermosetting hard resin**
plastic material, consisting principally of organic polymers, that has been cured into an essentially infusible and insoluble state, and cannot be usefully reshaped on heating

**3.3.4**
**thermoplastic hard resin**
plastic material, consisting principally of organic polymers, that can be repeatedly softened by heating and hardened by cooling, and in the softened state can be shaped by flow into *lenses* (3.5.2) or *blanks* (3.8.1) by moulding, extrusion or forming

**3.3.5**
**photochromic material**
DEPRECATED: photochromatic material
material that reversibly changes its *luminous transmittance* (3.17.6) depending upon the irradiance and wavelength of the *optical radiation* (3.1.1) falling upon it

Note 1 to entry: The material is designed to react to wavelengths within the solar spectral range, chiefly 300 nm to 450 nm.

Note 2 to entry: The transmittance properties are usually affected by ambient temperature.

**3.3.6**
**photochromic fatigue**
irreversible change in the *luminous transmittance* (3.17.6) of a *photochromic material* (3.3.5) with time, usually after prolonged cumulative and/or repeated exposure to *optical radiation* (3.1.1)

## 3.4 Lens surfaces

**3.4.1**
**spherical surface**
part of the inside or outside surface of a sphere

**3.4.2**
**cylindrical surface**
part of the inside or outside surface of a cylinder

**3.4.3**
**aspherical surface**
surface of revolution having continuously variable curvature over all or part of its area

Note 1 to entry: The *aspherical surface* is intended to improve the optical performance of the *finished lens* (3.8.7) away from its *optical axis* (3.1.8), and/or to improve the cosmetic performance, i.e. to reduce the sagittal depth of the surface of the *lens* (3.5.2).

**3.4.4**
**asphericity**
qualitative or quantitative term describing the departure of the curvature of a *meridian* (3.2.11) of an *aspherical surface* (3.4.3) or *atoroidal surface* (3.4.7) from that of a circle

Note 1 to entry: *Asphericity* can be described mathematically by the parameter $p$ or eccentricity, $e$, of a conic section or by the coefficients of a more complex mathematical function.

Documents
Document Sharing Hub
© Standards Australia Limited/Standards New Zealand 2020
Full document details: AS NZS ISO 13666-2020

**3.4.5**
**principal meridians**
<surface> *meridians* (3.2.11) of a surface with the maximum and minimum curvatures

Note 1 to entry: *Focal power* (3.10.2) exists in only these two *meridians*.

**3.4.6**
**toroidal surface**
surface having mutually perpendicular and circular *principal meridians* (3.4.5) of unequal curvature

Note 1 to entry: This is part of the surface generated by a circular arc rotating about an axis that is in the same plane as the arc but does not pass through its centre of curvature.

Note 2 to entry: It is desirable to restrict the term "toroidal" to a surface and the term "toric" to a *lens* (3.5.2) or object.

**3.4.7**
**atoroidal surface**
surface having mutually perpendicular *principal meridians* (3.4.5) of unequal curvature, at least one of which has *asphericity* (3.4.4)

Note 1 to entry: It is desirable to restrict the term "atoroidal" to a surface and the term "atoric" to a *lens* (3.5.2) or object.

**3.4.8**
**base curve**
*surface power* (3.10.4) (or curvature), generally, of the *front surface* (3.2.13)

Note 1 to entry: The nominal *base curve* is used for labelling purposes. This can also be termed nominal surface curve. For *blanks* (3.8.1), the actual *surface power* (3.10.4) (or surface curvature) is needed for surfacing calculations. This can also be termed "actual surface curve".

Note 2 to entry: When the *base curve* is specified as a *surface power* (3.10.4), the reference index shall be stated. The curvature or radius of curvature can be stated instead of the *surface power*, but this shall be clearly identified.

Note 3 to entry: For *toroidal surfaces,* the *base curve* is the actual or *nominal surface power* (3.10.5) (or curvature) of the *principal meridian* (3.4.5) having the numerically lower value.

Note 4 to entry: For multifocal surfaces and *power-variation surfaces* (3.4.10), the *base curve* is the actual or *nominal surface power* (or curvature) of the *distance portion* (3.15.1) or zone adjacent to the *primary reference point* (3.2.22) respectively.

Note 5 to entry: For very high-powered *negative lenses* (3.10.18) and *blanks* (3.8.1) with finished *back surfaces* (3.2.14), the actual or *nominal surface power* (or curvature) of the back surface may be taken as the *base curve*.

Note 6 to entry: When specifying the approximate form of a *single-vision lens* (3.7.1) in order to duplicate its form, it is recommended that the *surface power* of the non-astigmatic surface be used.

**3.4.9**
**cross curve**
<*toroidal surface*> *surface power* (3.10.4) of the *principal meridian* (3.4.5) of numerically higher value

Note 1 to entry: Depending on the context, the *cross curve* can refer to the *nominal surface power* (3.10.5) (or curvature) or to the actual *surface power* (3.10.4) (or curvature).

**3.4.10**
**power-variation surface**
surface with a smooth variation of *surface power* (3.10.4) over part or all of its area, without discontinuity

Note 1 to entry: These surfaces are generally intended to provide increasing or decreasing *spherical power*, typically in a vertical *meridian* (3.2.11), and hence are used, for example, for *power-variation lenses* (3.7.7).

© Standards Australia Limited/Standards New Zealand 2020

Documents
Document Sharing Hub

Full document details: AS NZS ISO 13666-2020