ANSI/ASABE AD4254-11:2010 JAN2012 (R2017ED)
Agricultural machinery — Safety — Part 11: Pick-up balers

American Society of
Agricultural and Biological Engineers

STANDARD

ASABE is a professional and technical organization, of members worldwide, who are dedicated to advancement of engineering applicable to agricultural, food, and biological systems. ASABE Standards are consensus documents developed and adopted by the American Society of Agricultural and Biological Engineers to meet standardization needs within the scope of the Society; principally agricultural field equipment, farmstead equipment, structures, soil and water resource management, turf and landscape equipment, forest engineering, food and process engineering, electric power applications, plant and animal environment, and waste management.

NOTE: ASABE Standards, Engineering Practices, and Data are informational and advisory only. Their use by anyone engaged in industry or trade is entirely voluntary. The ASABE assumes no responsibility for results attributable to the application of ASABE Standards, Engineering Practices, and Data. Conformity does not ensure compliance with applicable ordinances, laws and regulations. Prospective users are responsible for protecting themselves against liability for infringement of patents.

ASABE Standards, Engineering Practices, and Data initially approved prior to the society name change in July of 2005 are designated as "ASAE", regardless of the revision approval date. Newly developed Standards, Engineering Practices and Data approved after July of 2005 are designated as "ASABE".

Standards designated as "ANSI" are American National Standards as are all ISO adoptions published by ASABE. Adoption as an American National Standard requires verification by ANSI that the requirements for due process, consensus, and other criteria for approval have been met by ASABE.

Consensus is established when, in the judgment of the ANSI Board of Standards Review, substantial agreement has been reached by directly and materially affected interests. Substantial agreement means much more than a simple majority, but not necessarily unanimity. Consensus requires that all views and objections be considered, and that a concerted effort be made toward their resolution.

CAUTION NOTICE: ASABE and ANSI standards may be revised or withdrawn at any time. Additionally, procedures of ASABE require that action be taken periodically to reaffirm, revise, or withdraw each standard.

Copyright American Society of Agricultural and Biological Engineers. All rights reserved.

ASABE, 2950 Niles Road, St. Joseph, MI 49085-9659, USA, phone 269-429-0300, fax 269-429-3852, hq@asabe.org

Documents
Document Sharing Hub

Copyright American Society of Agricultural and Biological Engineers
Provided by IHS Markit under license with ASABE
No reproduction or networking permitted without license from IHS
Full document details: ASABE AD4254-11 2017

Licensee=/, User=,
Not for Resale,

ANSI/ASABE AD4254-11:2010 JAN2012 (R2017ED)
Approved March 2012; reaffirmed January 2017 as an American National Standard

Agricultural machinery — Safety — Part 11: Pick-up balers

These materials are subject to copyright claims of ISO and ASABE. No part of this publication may be reproduced in any form, including an electronic retrieval system, without the prior written permission of ASABE. All requests pertaining to ANSI/ASABE AD4254-11:2010 JAN2012 (R2017ED) standard should be submitted to ASABE.

This standard was reviewed and approved for adoption by the ASABE Power and Machinery Harvest subcommittee. Adopted and approved as an American National Standard March 2012; reaffirmed and revised editorially January 2017.

Keywords: Baler, Guarding, Pick-up

0 Foreword

0.1 ANSI/ASABE AD4254-11:2010 JAN2012 (R2017ED), Agricultural machinery — Safety — Part 11: Pick-up balers, is an adoption with deviations of the identically titled ISO standard ISO 4254-11:2010, Agricultural machinery — Safety — Part 11: Pick-up balers. Deviations noted in the following Foreword sections pertain to those provisions where harmonization could not be achieved between ASABE and the International Standard.

Deviations from the subsequently printed international standard are noted with underscore (addition) or strikethrough (deletions) text. Deviations from the international standard figures, tables and equations are clearly marked.

0.2 ANSI/ASABE AD4254-11:2010 JAN2012 (R2017ED), intended to be used together with ISO 4254-1, specifies the safety requirements and their verification for the design and construction of self-propelled and trailed pick-up balers, including the combination of pick-up balers with wrappers, independent of the shape or size of the bales formed. It describes methods for the elimination or reduction of hazards arising from the intended use and reasonably foreseeable misuse of these machines by one person (the operator) in the course of normal operation and service. In addition, it specifies the type of information on safe working practices to be provided by the manufacturer.

When requirements of this part of ISO 4254 are different from those which are stated in ISO 4254-1, the requirements of this part of ISO 4254 take precedence over the requirements of ISO 4254-1 for machines that have been designed and built according to the requirements of this part of ISO 4254.

This part of ISO 4254, taken together with ISO 4254-1, deals with all the significant hazards (as listed in Table 1), hazardous situations and events relevant to self-propelled and trailed pick-up balers, including the combination of pick-up balers with wrappers, when they are used as intended and under the conditions of misuse that are reasonably foreseeable by the manufacturer (see Clause 4).

This part of ISO 4254 is not applicable to pedestrian-controlled round balers, environmental hazards, road safety, vibration and hazards related to moving parts for power transmission. It is not applicable to hazards related to maintenance or repairs carried out by professional service personnel.

NOTE: Specific requirements related to road traffic regulations are not taken into account in this part of ISO 4254.

This part of ISO 4254 is not applicable to machines manufactured before the date of its publication.

Documents Document Sharing Hub
Copyright American Society of Agricultural and Biological Engineers
Provided by IHS Markit under license with ASABE
No reproduction or networking permitted without license from IHS
Licensee=/, User=,
Not for Resale,
Full document details: ASABE AD4254-11 2017

0.3 Six Normative references listed in ISO 4254-11. The responsible ASABE committee has reviewed these references and approved the following deviation:

0.3.1 Replace ISO 11684:1995, Tractors, machinery for agricultural and forestry, powered lawn and garden equipment — Safety signs and hazard pictorials — General principles, with ANSI/ASABE AD11684:1995 (APR2011), Tractors, machinery for agricultural and forestry, powered lawn and garden equipment — Safety signs and hazard pictorials — General principles. Any reference to ISO 11684:1995 in the printed portion of the ISO 4254-11:2010 text shall be replaced by ANSI/ASABE AD11684:1995 (APR2011).

0.4 This standard has been approved as an American National standard by ANSI (American National Standard Institute).

0.5 This standard deviates from ISO 4254-11:2010 as follows:

0.5.1 See Section 0.3 for Normative reference deviation.

0.5.2 The following definition shall be added to Section 3, Terms and definitions.

0.5.2.1 3.1 round baler pick-up

A mechanical system pivoting about a fixed point on the baler frame which transfers material from the ground to a secondary feeding device fixed to the baler frame or directly into the bale chamber.

0.5.3 Sections 5.2.2, Pick-up device, including Section 5.2.2.1, Section 5.2.2.2, Figure 1 and Figure 2, shall be replaced by the following:

0.5.3.1 5.2.2 Pick-up device

Protection against inadvertent contact with the pick-up device shall be provided to the maximum extent that is practicable and reasonable as permitted by its intended operation or use. Protection shall be provided by parts of the machine, guards, barriers, or a combination of these. The position of parts which may be adjustable shall always remain within the specified limits of 5.2.2.1. The projection on a horizontal plane of these protective devices shall be continuous.

5.2.2.1 When the pick-up device is in the working position as defined in the operator's manual, these barriers shall be:

— a minimum of 140 mm in front of the most forward point of the tine path and at a height, h, as low as practicable between 300 mm and 1200 mm above the ground, as defined in Figure 1a;

— a minimum of 100 mm from the sides of the tine path at a maximum height above the ground of 500 mm (see Figure 1a). If the tine path is covered by a part of the machine when viewed from the side, as defined and shown in Figure 2a, this barrier is not required.

0.5.3.2 Any reference to Figure 1 in the printed portion of the ISO 4254-11 text shall be replaced with Figure 1a.

0.5.3.3 Any reference to Figure 2 in the printed portion of the ISO 4254-11 text shall be replaced with Figure 2a.

0.5.4 Figure 3 shall be replaced by the following Figure 3a. Any reference to Figure 3 in the printed portion of the ISO 4254-11 text shall be replaced with Figure 3a.

Documents Document Sharing Hub
Copyright American Society of Agricultural and Biological Engineers
Provided by IHS Markit under license with ASABE
No reproduction or networking permitted without license from IHS
Licensee=/, User=,
Not for Resale,
Full document details: ASABE AD4254-11 2017

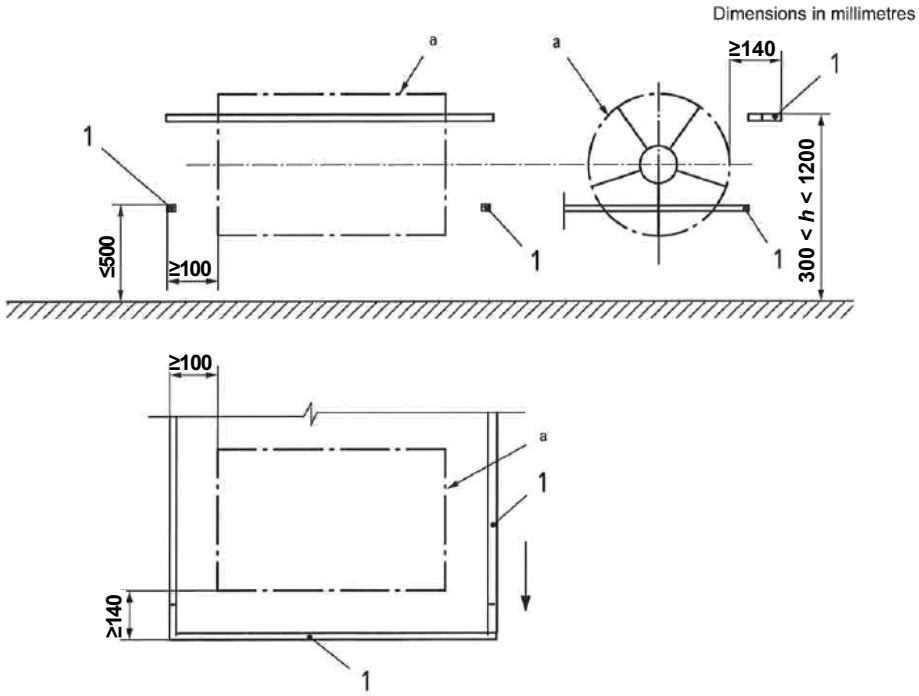

Key

1 barrier

a Tine path.

NOTE This figure illustrates an example of protective devices complying with 5.2.2.

Figure 1a – Guarding of the pick-up device definable by a combination of barriers

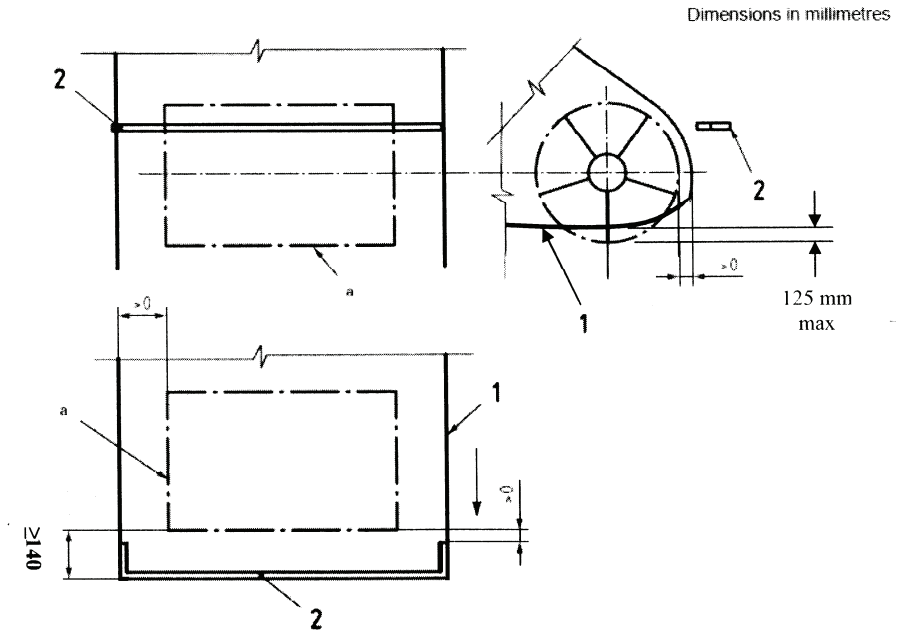

Key

1 fixed guard or part of the machine

2 barrier

a tine path

NOTE This figure illustrates an example of protective devices complying with 5.2.2.

Figure 2a – Guarding of the pick-up device definable by a combination of barriers and fixed guards or parts of the machine

Documents
Document Sharing Hub
Copyright American Society of Agricultural and Biological Engineers
Provided by IHS Markit under license with ASABE
No reproduction or networking permitted without license from IHS
Licensee=/, User=,
Not for Resale,
Full document details: ASABE AD4254-11 2017

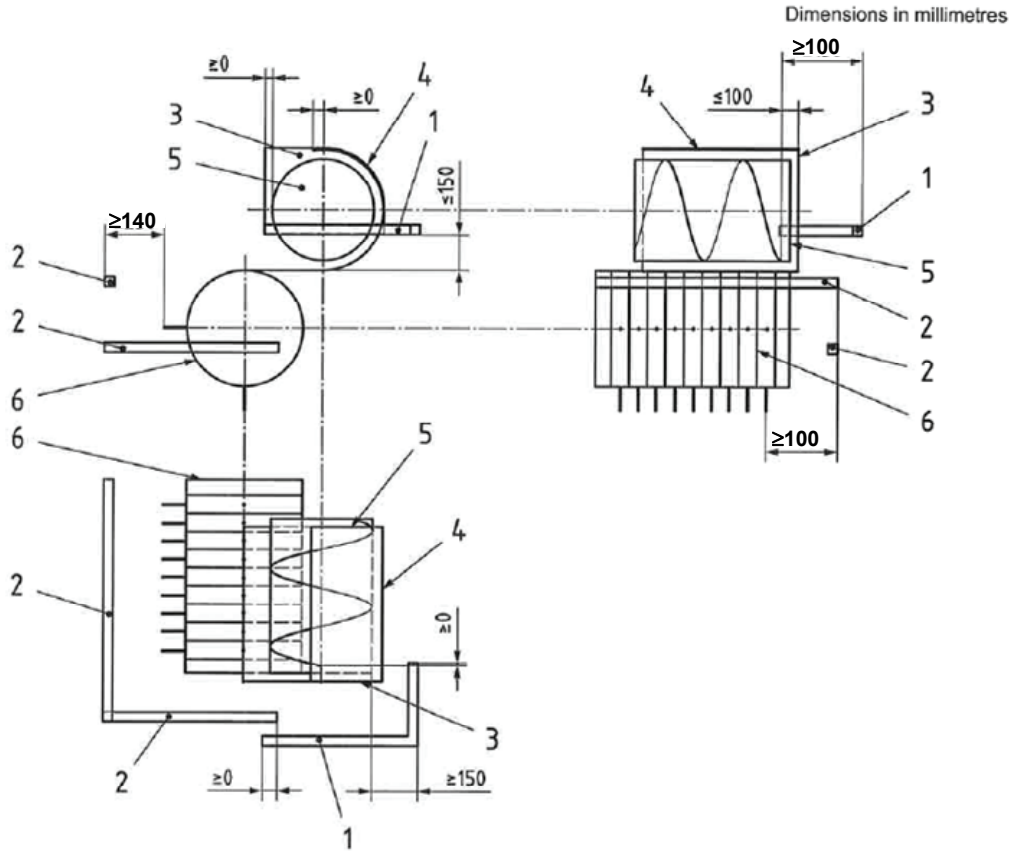

Key

1 barrier
2 barrier, as defined in 5.2.2.1
3 lateral rigid fixed guard
4 rear covering above the auger
5 feeding auger
6 pick-up

Figure 3a – Guarding of the feeding elements

0.5.5 Section 5.2.4.1 shall be replaced by the following:

5.2.4.1 Systems with moving components that store potential energy when disconnected from power source and that are engaged by a triggering mechanism shall have a device in order to prevent an inadvertent start-up of these elements.

0.5.6 Sections 5.3.1.1; 5.3.1.2; and Figure 4 shall be replaced by the following:

5.3.1.1 Nip-points or projections attached to the flywheel that are accessible from the ground or operator position shall be guarded against inadvertent contact.

0.5.7 Sections 5.3.2.1 and 5.3.2.2 shall be replaced by the following:

5.3.2.1 The connecting rod and crank mechanism shall be guarded according to provisions for moving transmission parts against inadvertent contact.

5.3.2.1.1 On balers capable of forming bales with a cross-section greater than 0.25 m^2:

5.3.2.1.1.1 If the guard of the rod and crank mechanism is open underneath, the side guard shall cover the extreme path of the crank when viewed from the side. Furthermore, a distance of at least 25 mm shall be provided between the rod and the crank mechanism and the guard; this 25 mm clearance shall extend from the edge of the guard for a distance of at least 120 mm (see Figure 5).

Documents
Document Sharing Hub
Copyright American Society of Agricultural and Biological Engineers
Provided by IHS Markit under license with ASABE
No reproduction or networking permitted without license from IHS
Licensee=/, User=,
Not for Resale,
Full document details: ASABE AD4254-11 2017

5.3.2.1.1.2 If fixed parts of the baler are located directly below the crank path at a distance, *d*, less than 300 mm from it, then the side guard shall extend below these fixed parts (see Figure 5).

0.5.8 Section 5.3.3.2 shall be replaced by the following:

5.3.3.2 When the crushing or shearing points are located less than 850 mm from the outer limit of the machine, a guard shall be fitted in such a way as to prevent inadvertent contact with the hazard.

0.5.9 Sections 5.3.4.2; 5.3.4.3; 5.3.4.4; 5.3.4.5; and Figure 6 shall be replaced by the following:

5.3.4.2 Protection against inadvertent contact with the knotter and associated tying mechanism moving parts shall be provided to the maximum extent that is practicable and reasonable as permitted by its intended operation or use.

0.5.10 Section 5.3.4.6 shall be replaced by the following:

5.3.4.6 When the knotting system contains a blower or blowers to keep the area free of chaff and trash, then:

— the blowers shall engage and disengage simultaneously with the tractor power take-off (PTO), or

— either the blowers shall be located in a way that inadvertent contact is not possible during inspection, service, and maintenance, or the blowers shall be protected by interlocking devices.

0.5.11 Sections 5.4.1.1 and 5.4.1.2 shall be replaced by the following:

5.4.1.1 The removal of crop flow blockages shall be possible with minimal risk to the operator.

5.4.1.2 Instructions and clearly visible warnings shall be provided requiring disengagement of the baler power source before clearing blockages. These warnings shall be affixed to the baler in proximity to the potential hazard zone. A recommended means to facilitate the manual removal of a crop flow blockage shall be provided.

5.4.1.3 If the method to remove blockages is a reversing mechanism, this device shall be either

— controlled from the operator station by means of a hold-to-run control located such that the danger zone cannot be reached when operating the control, or

— operable only manually and when the PTO drive is disconnected or power to the machine is otherwise interrupted

Text of ISO 4254-11, Agricultural machinery — Safety — Part 11: Pick-up balers, with deviations noted, follows.

1 Scope

This part of ISO 4254, intended to be used together with ISO 4254-1, specifies the safety requirements and their verification for the design and construction of self-propelled and trailed pick-up balers, including the combination of pick-up balers with wrappers, independent of the shape or size of the bales formed. It describes methods for the elimination or reduction of hazards arising from the intended use and reasonably foreseeable misuse of these machines by one person (the operator) in the course of normal operation and service. In addition, it specifies the type of information on safe working practices to be provided by the manufacturer.

When requirements of this part of ISO 4254 are different from those which are stated in ISO 4254-1, the requirements of this part of ISO 4254 take precedence over the requirements of ISO 4254-1 for machines that have been designed and built according to the requirements of this part of ISO 4254.

This part of ISO 4254, taken together with ISO 4254-1, deals with all the significant hazards (as listed in Table 1), hazardous situations and events relevant to self-propelled and trailed pick-up balers, including the combination of pick-up balers with wrappers, when they are used as intended and under the conditions of

Documents Document Sharing Hub
Copyright American Society of Agricultural and Biological Engineers
Provided by IHS Markit under license with ASABE
No reproduction or networking permitted without license from IHS
Licensee=/, User=,
Not for Resale,
Full document details: ASABE AD4254-11 2017

misuse that are reasonably foreseeable by the manufacturer (see Clause 4).

This part of ISO 4254 is not applicable to pedestrian-controlled round balers, environmental hazards, road safety, vibration and hazards related to moving parts for power transmission. It is not applicable to hazards related to maintenance or repairs carried out by professional service personnel.

NOTE: Specific requirements related to road traffic regulations are not taken into account in this part of ISO 4254.

This part of ISO 4254 is not applicable to machines manufactured before the date of its publication.

2 Normative references

The following referenced documents are indispensable for the application of this document. For dated references, only the edition cited applies. For undated references, the latest edition of the referenced document (including any amendments) applies.

ISO 3600:1996, *Tractors, machinery for agriculture and forestry, powered lawn and garden equipment — Operator's manuals — Content and presentation*

ISO 4254-1:2008, *Agricultural machinery — Safety — Part 1: General requirements*

~~ISO 11684:1995, *Tractors, machinery for agricultural and forestry, powered lawn and garden equipment — Safety signs and hazard pictorials — General principles*~~

ANSI/ASABE AD11684:1995 (APR2011), *Tractors, machinery for agricultural and forestry, powered lawn and garden equipment — Safety signs and hazard pictorials — General principles*

ISO 12100:—, *Safety of machinery —General principles for design — Risk assessment and risk reduction*[1)]

ISO 13857:2008, *Safety of machinery — Safety distances to prevent hazard zones being reached by upper and lower limbs*

ISO 14982:1998, *Agricultural and forestry machinery — Electromagnetic compatibility — Test methods and acceptance criteria*

3 Terms and definitions

For the purposes of this document, the terms and definitions given in ISO 12100 and ISO 4254-1 apply.

3.1 round baler pick-up

A mechanical system pivoting about a fixed point on the baler frame which transfers material from the ground to a secondary feeding device fixed to the baler frame or directly into the bale chamber.

4 List of significant hazards

Table 1 specifies the significant hazards, the significant hazardous situations and significant hazardous events that have been identified by risk assessment as being significant for this type of machine, covered by this part of ISO 4254, and which may require specific action by the designer or manufacturer to eliminate or reduce the risk.

Attention is drawn to the necessity to verify that the safety requirements specified in this part of ISO 4254 apply to each significant hazard presented by a given machine and to validate that the risk assessment is complete.

[1] To be published.

Documents Document Sharing Hub
Copyright American Society of Agricultural and Biological Engineers
Provided by IHS Markit under license with ASABE
No reproduction or networking permitted without license from IHS
Licensee=/, User=,
Not for Resale,
Full document details: ASABE AD4254-11 2017