ANSI/ASABE AD5675:2008 JUN2016
Agricultural tractors and machinery — General purpose quick-action hydraulic couplers

American Society of Agricultural and Biological Engineers

STANDARD

ASABE is a professional and technical organization, of members worldwide, who are dedicated to advancement of engineering applicable to agricultural, food, and biological systems. ASABE Standards are consensus documents developed and adopted by the American Society of Agricultural and Biological Engineers to meet standardization needs within the scope of the Society; principally agricultural field equipment, farmstead equipment, structures, soil and water resource management, turf and landscape equipment, forest engineering, food and process engineering, electric power applications, plant and animal environment, and waste management.

NOTE: ASABE Standards, Engineering Practices, and Data are informational and advisory only. Their use by anyone engaged in industry or trade is entirely voluntary. The ASABE assumes no responsibility for results attributable to the application of ASABE Standards, Engineering Practices, and Data. Conformity does not ensure compliance with applicable ordinances, laws and regulations. Prospective users are responsible for protecting themselves against liability for infringement of patents.

ASABE Standards, Engineering Practices, and Data initially approved prior to the society name change in July of 2005 are designated as "ASAE", regardless of the revision approval date. Newly developed Standards, Engineering Practices and Data approved after July of 2005 are designated as "ASABE".

Standards designated as "ANSI" are American National Standards as are all ISO adoptions published by ASABE. Adoption as an American National Standard requires verification by ANSI that the requirements for due process, consensus, and other criteria for approval have been met by ASABE.

Consensus is established when, in the judgment of the ANSI Board of Standards Review, substantial agreement has been reached by directly and materially affected interests. Substantial agreement means much more than a simple majority, but not necessarily unanimity. Consensus requires that all views and objections be considered, and that a concerted effort be made toward their resolution.

CAUTION NOTICE: ASABE and ANSI standards may be revised or withdrawn at any time. Additionally, procedures of ASABE require that action be taken periodically to reaffirm, revise, or withdraw each standard.

Copyright American Society of Agricultural and Biological Engineers. All rights reserved.

ASABE, 2950 Niles Road, St. Joseph, MI 49085-9659, USA, phone 269-429-0300, fax 269-429-3852, hq@asabe.org

--`,,```,,,,````-`-`,,`,,`,`,,`---

Documents
Document Sharing Hub

Copyright American Society of Agricultural and Biological Engineers
Provided by IHS Markit under license with ASABE
No reproduction or networking permitted without license from IHS
Full document details: ASABE AD5675 2016

Licensee=/, User=,
Not for Resale,

ANSI/ASABE AD5675:2008 JUN2016
Approved June 2016 as an American National Standard

Agricultural tractors and machinery — General purpose quick-action hydraulic couplers

These materials are subject to copyright claims of ISO and ASABE. No part of this publication may be reproduced in any form, including an electronic retrieval system, without the prior written permission of ASABE. All requests pertaining to the ANSI/ASABE AD5675:2008 June 2016 standard should be submitted to ASABE.

History of ANSI/ASAE S366, Agricultural tractors and machinery – General purpose quick-action hydraulic couplers: Proposed by the Engineering Policy Committee of the Farm and Industrial Equipment Institute; approved by the ASAE Power and Machinery Division Standards Committee; adopted by ASAE as a Recommendation December 1973; reclassified as a Standard March 1978; reaffirmed December 1978; revised March 1982; revised editorially and reaffirmed December 1986; revised editorially July 1989; reaffirmed December 1991; December 1996, December 1997, December 1998; December 1999; January 2001; December 2001, February 2003; adoption with modification of ISO 5675:1992(E) and addition of ASAE Forward with deviations May 2004; approved by ANSI August 2004; reaffirmed by ASABE February 2009; reaffirmed by ANSI August 2009. Replaced with ISO adoption ISO 5675:2008 June 2016; adoption approved by ANSI June 2016.

Keywords: Couplers, Hydraulic, Quick Disconnects, Tractors

0 Foreword

0.1 ANSI/ASABE AD5675:2008 MONYEAR, Agricultural tractors and machinery — General purpose quick-action hydraulic couplers, is an adoption with deviations of the identically titled ISO standard ISO 5675:2008, Agricultural tractors and machinery — General purpose quick-action hydraulic couplers. Deviations noted in the following Foreword sections pertain to those provisions where harmonization could not be achieved between ASABE and the International Standard.

Deviations from the subsequently printed international standard are noted with underscore (addition) or strikethrough (deletions) text. Deviations from the international standard figures, tables and equations are clearly marked.

0.2 ANSI/ASABE AD5675:2008 JUN2016 specifies the essential interface dimensions, as defined in ISO 7241:2014, and the operating requirements for hydraulic couplers employed to transmit hydraulic power from agricultural tractors to agricultural machinery. It is applicable to couplers used in hydraulic lines other than those used for braking circuits (see ISO 5676).

0.3 Two normative references are listed in ISO 5675:2008. The responsible ASABE committee has reviewed these references and approved the following deviation.

0.3.1 Replace the reference ISO 7241-1:1987 *Hydraulic fluid power — Quick-action couplings — Part 1: Dimensions and requirements* with ISO 7241:2014 *Hydraulic fluid power — Dimensions and requirements of quick-action couplings.* Any reference to ISO 7241-1:1987 in the printed portion of ISO 5675:2008 shall be replaced by ISO 7241:2014.

0.4 This standard has been approved as an American National standard by ANSI (American National Standards Institute). The original content of ISO 5675:2008 was based on ANSI/ASAE 366.2.

Documents
Document Sharing Hub
Copyright American Society of Agricultural and Biological Engineers
Provided by IHS Markit under license with ASABE
No reproduction or networking permitted without license from IHS
Licensee=/, User=,
Not for Resale,
Full document details: ASABE AD5675 2016

0.5 This standard deviates from ISO 5675:2008 as follows:

0.5.1 See Section 0.3 for Normative reference deviation.

4.1 Dimensional requirements: Change entire section to:

The dimensions of the coupler male part shall be in accordance with ISO 7241:2014, Table 1 and Figure 1, series "A", for sizes 12.5 and 20. The coupler male part dimension shall be in accordance with Figure 1 and Table 1 of this International Standard, Additionally, the 15 degree angle shall be added to be compatible with dust protection devices.

Note 1: Replace ISO Figure 1 with Figure 1 and ISO Table 1 with Table 1 below.

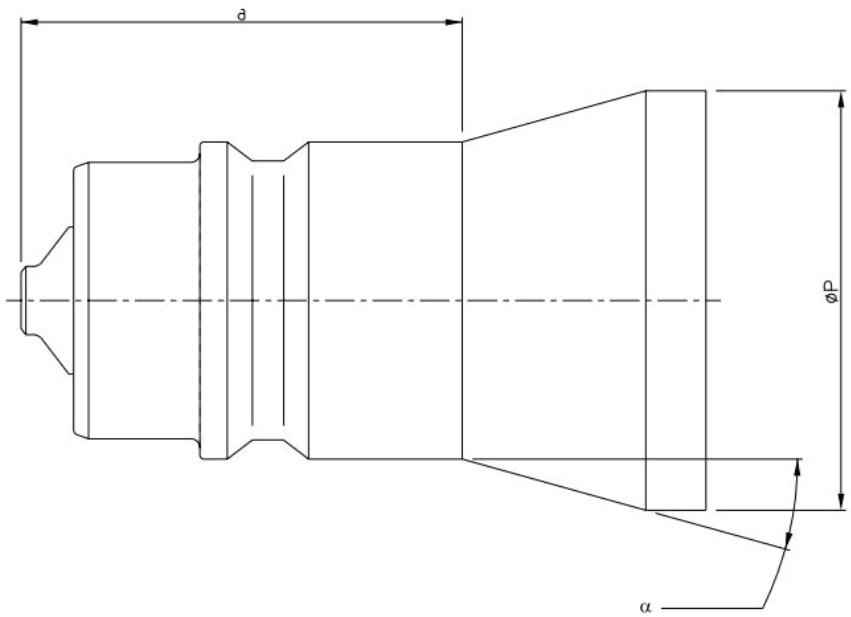

For dimension *P*, see Table 1

[a] Dimension in accordance with ISO 7241, series "A".

Figure 1 – Coupler male part dimensions

Table 1 – Dimension *P* & *α*

Nominal Size (according to ISO 7241:2014)	Dimension *P*	Angle *α*
12.5	≤ 31	15° ± 3°
20	≤ 38	15° ± 3°
NOTE 1 The nominal size designation corresponds to the nominal inside diameter of the hose recommended for use with the coupling, as specified in ISO 4397 NOTE 2 Similar couplers are described in ISO 7241; however, couplers conforming to ISO 7241 might not conform to this International Standard.		

Documents
Document Sharing Hub
Copyright American Society of Agricultural and Biological Engineers
Provided by IHS Markit under license with ASABE
No reproduction or networking permitted without license from IHS
Licensee=/, User=,
Not for Resale,
Full document details: ASABE AD5675 2016