ASABE/ISO 5008:2002 W/Cor. 1 MAY2006 (R2020)
Agricultural wheeled tractors and field machinery — Measurement of whole-body vibration of the operator

American Society of
Agricultural and Biological Engineers

STANDARD

ASABE is a professional and technical organization, of members worldwide, who are dedicated to advancement of engineering applicable to agricultural, food, and biological systems. ASABE Standards are consensus documents developed and adopted by the American Society of Agricultural and Biological Engineers to meet standardization needs within the scope of the Society; principally agricultural field equipment, farmstead equipment, structures, soil and water resource management, turf and landscape equipment, forest engineering, food and process engineering, electric power applications, plant and animal environment, and waste management.

NOTE: ASABE Standards, Engineering Practices, and Data are informational and advisory only. Their use by anyone engaged in industry or trade is entirely voluntary. The ASABE assumes no responsibility for results attributable to the application of ASABE Standards, Engineering Practices, and Data. Conformity does not ensure compliance with applicable ordinances, laws and regulations. Prospective users are responsible for protecting themselves against liability for infringement of patents.

ASABE Standards, Engineering Practices, and Data initially approved prior to the society name change in July of 2005 are designated as “ASAE”, regardless of the revision approval date. Newly developed Standards, Engineering Practices and Data approved after July of 2005 are designated as “ASABE”.

Standards designated as “ANSI” are American National Standards as are all ISO adoptions published by ASABE. Adoption as an American National Standard requires verification by ANSI that the requirements for due process, consensus, and other criteria for approval have been met by ASABE.

Consensus is established when, in the judgment of the ANSI Board of Standards Review, substantial agreement has been reached by directly and materially affected interests. Substantial agreement means much more than a simple majority, but not necessarily unanimity. Consensus requires that all views and objections be considered, and that a concerted effort be made toward their resolution.

CAUTION NOTICE: ASABE and ANSI standards may be revised or withdrawn at any time. Additionally, procedures of ASABE require that action be taken periodically to reaffirm, revise, or withdraw each standard.

Copyright American Society of Agricultural and Biological Engineers. All rights reserved.

ASABE, 2950 Niles Road, St. Joseph, MI 49085-9659, USA, phone 269-429-0300, fax 269-429-3852, hq@asabe.org

Documents
Document Sharing Hub

Full document details: ASABE ISO 5008-2002 (2020)

ASABE/ISO 5008:2002 W/Cor. 1 MAY2006 (R2020)
Approved May 2006; reaffirmed December 2020 as an American National Standard

Agricultural wheeled tractors and field machinery — Measurement of whole-body vibration of the operator

These materials are subject to copyright claims of ISO and ASABE. No part of this publication may be reproduced in any form, including an electronic retrieval system, without the prior written permission of ASABE. All request pertaining to the ANSI/ISO 5008:2002 W/Cor. 1 MAY2006 (R2020) Standard should be submitted to ASABE.

This standard was reviewed for adoption by the ASABE Power and Machinery Agricultural Machinery — Common Tests Technical subcommittee, and has been formally approved by the Technical Committee. The adoption of this standard was made possible by the signing of 2004 SAE-ASABE copyright agreements, which gave ASABE a royalty-free license to publish in whole or in part SAE standard document J1013. Adopted by ASABE and approved as an American National Standard May 2006; editorial revision and reaffirmed February 2011; reaffirmed December 2015, December 2020.

Keywords: Operator, Seat, Tractors, Vibration

0 Foreword

0.1 ASABE/ISO 5008:2002, Agricultural wheeled tractors and field machinery — Measurement of whole-body vibration of the operator, is an adoption without modification of the identically titled ISO standard ISO 5008:2002, Agricultural wheeled tractors and field machinery — Measurement of whole-body vibration of the operator.

This ISO standard is a derivative of SAE J1013, Measurement of Whole Body Vibration of the Seated Operator of Off-Highway Work Machines.

0.1.1 The following Technical Corrigendum to ISO 5008:2002 was reviewed for adoption by the ASABE Power and Machinery Agricultural Machinery — Common Tests Technical Subcommittee and has been formally approved by the Technical committee.

0.1.1 1 ISO 5008:2002/Cor.1:2005

0.2 Scope for ASABE/ISO 5008:2002 W/Cor. 1:2005:

- Specifies methods for measuring and reporting the whole body vibration to which the operator of an agricultural wheeled tractor or other field machine is exposed when operating on a standard test track.
- The operating conditions of the machine and the ordinates of the artificial test tracks are also included.
- This International Standard applies when measurements are made on the artificial test tracks defined herein.
- Measurements made under field conditions are covered in annex A.

This International Standard does not include assessment of vibration reaching the operator other than through his/her seat or foot platform (e.g., vibration that is sensed by the feet through the controls or by the hands through the steering wheel is not considered).

0.3 Seven normative references are listed in ISO 5008:2002. These references have been reviewed and accepted as part of the adoption of ASABE/ISO 5008:2002 W/Cor.1:2005.

Documents
Document Sharing Hub
Full document details: ASABE ISO 5008-2002 (2020)

0.4 This standard has been approved as an American National standard by ANSI (American National Standard Institute).

1 Scope

1.1 This International Standard specifies methods for measuring and reporting the whole body vibration to which the operator of an agricultural wheeled tractor or other field machine is exposed when operating on a standard test track.

1.2 The operating conditions of the machine and the ordinates of the artificial test tracks are also included.

1.3 This International Standard applies when measurements are made on the artificial test tracks defined herein.

1.4 Measurements made under field conditions are covered in annex A.

1.5 This International Standard does not include assessment of vibration reaching the operator other than through his/her seat or foot platform (e.g., vibration that is sensed by the feet through the controls or by the hands through the steering wheel is not considered).

2 Normative references

The following normative documents contain provisions which, through reference in this text, constitute provisions of this International Standard. For dated references, subsequent amendments to, or revisions of, any of these publications do not apply. However, parties to agreements based on this International Standard are encouraged to investigate the possibility of applying the most recent editions of the normative documents indicated below. For undated references, the latest edition of the normative document referred to applies. Members of ISO and IEC maintain registers of currently valid International Standards.

ISO 2041:1990, *Vibration and shock — Vocabulary*

ISO 2631-1:1997, *Mechanical vibration and shock — Evaluation of human exposure to whole-body vibration — Part 1: General requirements*

ISO 5007:[1)], *Agricultural wheeled tractors — Operator's seat — Laboratory measurement of transmitted vibration*

ISO 5348:1998, *Mechanical vibration and shock — Mechanical mounting of accelerometers*

ISO 8041:1990, *Human response to vibration — Measuring instrumentation*

ISO 10326-1:1992, *Mechanical vibration — Laboratory method for evaluating vehicle seat vibration — Part 1: Basic requirements*

ISO 13090-1:1998, *Mechanical vibration and shock — Guidance on safety aspects of tests and experiments with people — Part 1: Exposure to whole-body mechanical vibration and repeated shock*

[1)] To be published. (Revision of ISO 5007:1990)

Documents Document Sharing Hub

Full document details: ASABE ISO 5008-2002 (2020)

3 Terms and definitions

For the purposes of this International Standard, the terms and definitions given in ISO 2041 and the following apply.

3.1
whole-body vibration
vibration transmitted to the body as a whole through the buttocks of a seated operator

3.2
operator seat
that portion of the machine provided for the purpose of supporting the buttocks and back of the seated operator, including any suspension system and other mechanisms provided (e.g., for adjusting the seat position)

3.3
frequency analysis
process of arriving at a quantitative description of vibration amplitude as a function of frequency

3.4
measuring period
time duration in which vibration data for analysis is obtained

4 Symbols

$a_{wi}(t)$ frequency weighted acceleration in the direction i (i = x, y or z)

a_{wx} rms value of the frequency weighted acceleration in the x direction

a_{wy} rms value of the frequency weighted acceleration in the y direction

a_{wz} rms value of the frequency weighted acceleration in the z direction

B_e resolution bandwidth of the frequency analysis, in hertz

D distance from start, in metres (see clause 11)

L ordinate of left-hand strip, in millimetres (see clause 11)

rms root-mean-square

R ordinate of right-hand strip, in millimetres (see clause 11)

T_s sampling time, in seconds

5 Vibration measurements

5.1 Location of the measurements

The vibration shall be measured along three mutually perpendicular axes, defined as follows:

x-direction: back to chest

y-direction: right side to left side

z-direction: foot (or buttocks) to head

Documents Document Sharing Hub
Full document details: ASABE ISO 5008-2002 (2020)

The vibration shall be determined as close as possible to the point or area through which the vibration is transmitted to the body.

a) In the case where the operator is normally sitting, transducers mounted in a semirigid disc shall be placed on the surface of the seat such that the transducers are located midway between the ischial tuberosities of the seated person. It is acceptable if the centre of the disc is located slightly in front (up to 5 cm) of the ischial turberosities or the vertical projection of the Seat Index Point (SIP).

b) In the case where the operator is normally standing, the transducers shall be located on the platform midway between the arches of the feet.

5.2 Magnitude of vibration

The quantity used to describe the magnitude of vibration shall be the frequency-weighted acceleration in meters per second squared (m/s^2), expressed as a root-mean-square (rms) value.

The frequency weightings to be used are defined in 6.3.

The rms value a_{wi} used in this International Standard is defined as the rms value of the frequency weighted acceleration signal $a_{wi}(t)$ [i = x, y or z]:

$$a_{wi} = \left[\frac{1}{T} \int_0^T a_{wi}^{\,2}(t)\,\mathrm{d}t \right]^{1/2}$$

For tests on a standard track, the integration time shall be the time required to traverse the track.

6 Instrumentation

6.1 General

Measuring equipment may comprise:

a) transducers (usually accelerometers);

b) conditioning amplifiers and filters;

c) telemetry set;

d) recorders (digital or analog);

e) meters.

The dynamic range, sensitivity, accuracy, linearity and overload capacity of the vibration measuring system shall be in accordance with ISO 8041:1990 for type 1 instruments.

6.2 Transducers

Accelerometers shall normally be used for measurement of vibration. The mounting of accelerometers shall be in accordance with ISO 5348 and the transducer manufacturer's instructions. Transducers oriented in different directions at a single measurement location shall be as close together as possible. Care should be taken to ensure, as far as is practical, that neither the mass of the measuring device and its fixture, nor any local resonances, significantly affect the measured value.

Documents Document Sharing Hub

Full document details: ASABE ISO 5008-2002 (2020)

The transducers used for the measurement in the seat shall be mounted in a semirigid disc (see Figure 1). The disc shall be 12 mm or less in thickness and be made of approximately 80-90 Shore-A molded rubber or plastic material.

NOTE For practical reasons it is usually not possible to perfectly align the accelerometers in the disc with the directions of the basicentric coordinate system. In a tolerance range to within ±15° of the appropriate directions, the accelerometers may be considered as aligned parallel to these directions.

The transducers used for the measurement at the feet of a standing operator shall be rigidly fixed (e.g. by screwing or gluing) on to the working platform. If the working platform is covered by a resilient material, the transducers may be mounted in the middle of a rigid metal plate (about 30 cm × 40 cm) with the operator standing on the plate.

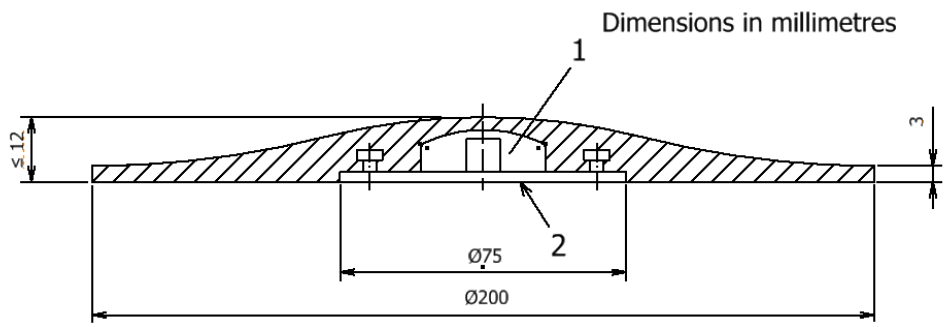

Key

1 Cavity appropriate for accelerometers

2 Thin metal disc for accelerometer mount and added centre rigidity

Figure 1 – Design for semirigid disc for seat accelerometers

(see ISO 10326-1)

6.3 Frequency weighting

The frequency weightings to be used shall correspond to frequency weightings W_d (for the x and y directions) and W_k (for the z direction) in accordance with ISO 2631-1:1997 for whole body vibration.

6.4 Calibration

The whole measurement chain shall be checked both before and after a sequence of measurements by using a calibration source that produces a known acceleration at a known frequency.

NOTE It is also important to regularly check that the whole chain is also calibrated at other frequencies throughout the frequency range of interest.

In addition to regular preventive calibration (e.g. every two years), calibration is also necessary after rough handling of any important part of the measurement chain. The results of the calibration check shall be recorded.

7 Safety recommendations

Safety precautions shall be in accordance with ISO 13090-1.

Documents Document Sharing Hub

Full document details: ASABE ISO 5008-2002 (2020)