ASABE/ISO 12003-2:2008 SEP2017
Agricultural and forestry tractors — Roll-over protective structures on narrow-track wheeled tractors — Part 2: Rear-mounted ROPS

American Society of
Agricultural and Biological Engineers

STANDARD

ASABE is a professional and technical organization, of members worldwide, who are dedicated to advancement of engineering applicable to agricultural, food, and biological systems. ASABE Standards are consensus documents developed and adopted by the American Society of Agricultural and Biological Engineers to meet standardization needs within the scope of the Society; principally agricultural field equipment, farmstead equipment, structures, soil and water resource management, turf and landscape equipment, forest engineering, food and process engineering, electric power applications, plant and animal environment, and waste management.

NOTE: ASABE Standards, Engineering Practices, and Data are informational and advisory only. Their use by anyone engaged in industry or trade is entirely voluntary. The ASABE assumes no responsibility for results attributable to the application of ASABE Standards, Engineering Practices, and Data. Conformity does not ensure compliance with applicable ordinances, laws and regulations. Prospective users are responsible for protecting themselves against liability for infringement of patents.

ASABE Standards, Engineering Practices, and Data initially approved prior to the society name change in July of 2005 are designated as "ASAE", regardless of the revision approval date. Newly developed Standards, Engineering Practices and Data approved after July of 2005 are designated as "ASABE".

Standards designated as "ANSI" are American National Standards as are all ISO adoptions published by ASABE. Adoption as an American National Standard requires verification by ANSI that the requirements for due process, consensus, and other criteria for approval have been met by ASABE.

Consensus is established when, in the judgment of the ANSI Board of Standards Review, substantial agreement has been reached by directly and materially affected interests. Substantial agreement means much more than a simple majority, but not necessarily unanimity. Consensus requires that all views and objections be considered, and that a concerted effort be made toward their resolution.

CAUTION NOTICE: ASABE and ANSI standards may be revised or withdrawn at any time. Additionally, procedures of ASABE require that action be taken periodically to reaffirm, revise, or withdraw each standard.

Copyright American Society of Agricultural and Biological Engineers. All rights reserved.

ASABE, 2950 Niles Road, St. Joseph, MI 49085-9659, USA, phone 269-429-0300, fax 269-429-3852, hq@asabe.org

Documents
Document Sharing Hub

Copyright American Society of Agricultural and Biological Engineers
Provided by IHS Markit under license with ASABE
No reproduction or networking permitted without license from IHS
Licensee=/, User=,
Not for Resale,
Full document details: ASAE ISO 12003-2 2017

ASABE/ISO 12003-2:2008 SEP2017
Approved September 2017 as an American National Standard

Agricultural and forestry tractors — Roll-over protective structures on narrow-track wheeled tractors — Part 2: Rear-mounted ROPS

These materials are subject to copyright claims of ISO and ASABE. No part of this publication may be reproduced in any form, including an electronic retrieval system, without the prior written permission of ASABE. All requests pertaining to ASABE/ISO 12003-2:2008 SEP2017 standard should be submitted to ASABE.

This standard was reviewed and approved for adoption by the ASABE Machinery System Agricultural Machinery Common Tests subcommittee. Approved as an ASABE standard and approved by ANSI September 2017.

Keywords: Roll-over, ROPS, Safety, Test procedure, Tractor

0 Foreword

0.1 ASABE/ISO 12003-2:2008 SEP2017, Agricultural and forestry tractors — Roll-over protective structures on narrow-track wheeled tractors — Part 2: Rear-mounted ROPS, is an adoption without modification of the identically titled ISO standard ISO 12003-1:2008, Agricultural and forestry tractors — Roll-over protective structures on narrow-track wheeled tractors — Part 2: Rear-mounted ROPS.

0.2 ASABE/ISO 12003-2:2008 SEP2017 specifies procedures for both the static and dynamic testing of roll-over protective structures (ROPS) rear-mounted on narrow-track wheeled agricultural and forestry tractors. It defines the clearance zone and acceptance conditions for rigid or tiltable, rear, two-post roll bar, frame and cab ROPS, and is applicable to tractors so equipped having the following characteristics.

— A ground clearance of not more than 600 mm beneath the lowest points of the front- and rear-axle housings (not considering lower points on the axle differential).

— A fixed or adjustable minimum track width of one of the two axles of less than 1 150 mm when fitted with the widest specified tyres, and with the overall width of the other axle being less than that of the first axle.

— A mass greater than 600 kg but less than 3 000 kg, unladen, including the ROPS and tyres of the largest size recommended by the manufacturer.

0.3 Six normative references are listed in ISO 12003-2:2008. These references have been reviewed and accepted as part of the adoption of the ISO document in ASABE adoption number.

0.4 This standard has been approved as an American National standard by ANSI (American National Standard Institute).

0.5 Product labelled to reference ISO 12003-2 shall be deemed compliant to ASABE/ISO 12003-2.

Text of ISO 12003-2:2008, Agricultural and forestry tractors — Roll-over protective structures on narrow-track wheeled tractors — Part 2: Rear-mounted ROPS, follows.

Documents Document Sharing Hub
Copyright American Society of Agricultural and Biological Engineers
Provided by IHS Markit under license with ASABE
No reproduction or networking permitted without license from IHS
Licensee=/, User=,
Not for Resale,
Full document details: ASAE ISO 12003-2 2017

1 Scope

This part of ISO 12003 specifies procedures for both the static and dynamic testing of roll-over protective structures (ROPS) rear-mounted on narrow-track wheeled agricultural and forestry tractors. It defines the clearance zone and acceptance conditions for rigid or tiltable, rear, two-post roll bar, frame and cab ROPS, and is applicable to tractors so equipped having the following characteristics.

— A ground clearance of not more than 600 mm beneath the lowest points of the front- and rear-axle housings (not considering lower points on the axle differential).

— A fixed or adjustable minimum track width of one of the two axles of less than 1 150 mm when fitted with the widest specified tyres, and with the overall width of the other axle being less than that of the first axle.

— A mass greater than 600 kg but less than 3 000 kg, unladen, including the ROPS and tyres of the largest size recommended by the manufacturer.

2 Normative references

The following referenced documents are indispensable for the application of this document. For dated references, only the edition cited applies. For undated references, the latest edition of the referenced document (including any amendments) applies.

ISO 630, Structural steels — Plates, wide flats, bars, sections and profiles

ISO 898-1:1999, Mechanical properties of fasteners made of carbon steel and alloy steel — Part 1: Bolts, screws and studs

ISO 898-2:1992, Mechanical properties of fasteners — Part 2: Nuts with specified proof load values — Coarse thread

ISO 2408, Steel wire ropes for general purposes — Minimum requirements

ISO 5353, Earth-moving machinery, and tractors and machinery for agriculture and forestry — Seat index point

ASTM A370, Standard Test Methods and Definitions for Mechanical Testing of Steel Products

3 Terms and definitions

For the purposes of this document, the following terms and definitions apply.

3.1
roll-over protective structure
ROPS
framework protecting drivers of wheeled agricultural and forestry tractors, which minimizes the likelihood of driver injury resulting from accidental overturning during normal field work

NOTE: The ROPS is characterized by the provision of space for a clearance zone, either inside the envelope of the structure or within a space bounded by a series of straight lines from the outer edges of the structure to any part of the tractor that might come into contact with the ground; it is capable of supporting the tractor in an overturned position.

Documents
Document Sharing Hub
Copyright American Society of Agricultural and Biological Engineers
Provided by IHS Markit under license with ASABE
No reproduction or networking permitted without license from IHS
Licensee=/, User=,
Not for Resale,
Full document details: ASAE ISO 12003-2 2017

3.2

rear-mounted ROPS

two-post, roll-bar-type, roll-over protective structure mounted on the tractor rearwards of the driving seat, or a frame or cab

NOTE: Compare with front-mounted ROPS described in ISO 12003-1.

3.3

tractor mass

mass of the unladen tractor in working order with tanks and radiator full, rear-mounted ROPS with cladding, and any track equipment or additional front-wheel drive components required for normal use

NOTE: The operator, optional ballast weights, additional wheel equipment, and special equipment and tools are not included.

3.4

reference mass

mass, not less than the tractor mass, selected by the manufacturer for calculation of the energy inputs to be used in the tests

3.5

horizontal loading test

application of a horizontal load to the rear, front and side of the roll-over protective structure

3.6

crushing test

application of a vertical static load through a beam placed laterally across the uppermost members of the rear-mounted ROPS

3.7

reference plane

vertical plane, generally longitudinal to the tractor and passing through the seat index point and the steering-wheel centre

NOTE: Normally this reference plane coincides with the longitudinal median plane of the tractor.

3.8

longitudinal median plane

longitudinal plane of symmetry

zero Y plane

vertical plane Y passing through the mid-points of AB, perpendicular to AB, where, for each wheel, the vertical plane passing through its axis cuts the mid-plane of the wheel following a straight line Δ which meets the supporting surface of the vehicle at one point, and where A and B are two points thus defined which correspond to two wheels, both of which are either steering or powered wheels, situated respectively at the two ends of the same real or imaginary axle.

See Figure 1.

NOTE 1: “Mid-plane of the wheel” designates the plane equidistant from the inner edges of the rim. In the case of dual wheels, the straight line Δ is, in this particular case, the intersection of the mid-plane of the dual wheels and the vertical plane passing through the axis of the axle pin.

NOTE 2: Adapted from ISO 612:1978[1], Clause 5.

3.9

impact test

application of a dynamic load produced by a block acting as a pendulum

Documents
Document Sharing Hub
Copyright American Society of Agricultural and Biological Engineers
Provided by IHS Markit under license with ASABE
No reproduction or networking permitted without license from IHS
Licensee=/, User=,
Not for Resale,
Full document details: ASAE ISO 12003-2 2017

3.10

wheelbase

horizontal distance between the two vertical planes passing through the rotational centre-lines of the wheels, where one plane is for the front wheels and the other for the rear wheels

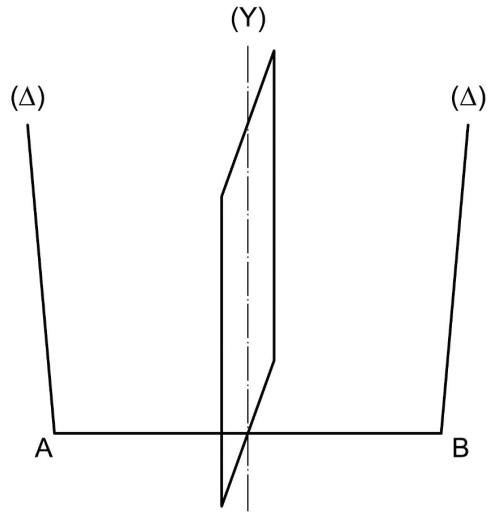

Figure 1 – Longitudinal median plane

4 Symbols

See Table 1.

Table 1 – Symbols

Symbol	Description	Unit
a_h	Half of the horizontal seat adjustment	mm
a_v	Half of the vertical seat adjustment	mm
B	Minimum overall width of the tractor	mm
B_b	Maximum outer width of the rear-mounted ROPS	mm
D	Deflection of the ROPS for the calculated basic energy at the point of, and in line with, the load application	mm
E_{il}	Energy to be absorbed during longitudinal loading	J
E_{is}	Energy to be absorbed during side loading	J
F	Static load force	N
F_{max}	Maximum static load force occurring during loading, with the exception of overload	N
F_v	Vertical crushing force	N
H	Falling height of the pendulum block	mm
I_r	Moment of inertia about rear axle, whatever the mass of the rear wheels may be	$kg \cdot m^2$
L	Tractor reference wheelbase	mm
m	Tractor mass (see 3.5)	kg
m_t	Reference mass (see 3.4)	kg
W	Overall width of the upper part of the protective structure	mm

Documents
Document Sharing Hub
Copyright American Society of Agricultural and Biological Engineers
Provided by IHS Markit under license with ASABE
No reproduction or networking permitted without license from IHS
Licensee=/, User=,
Not for Resale,
Full document details: ASAE ISO 12003-2 2017

5 Test apparatus and equipment

5.1 Apparatus for both dynamic and static testing

5.1.1 Clearance zone framework

Means to prove that the clearance zone has not been entered during the test: a measuring rig complying with Figures 10 and 11 can be used.

5.1.2 Apparatus for crushing tests

The crushing tests shall be carried out by means of the elements described in 5.1.2.1 and 5.1.2.2.

5.1.2.1 Means to apply downward force on the protective structure, such as that shown in Figure 2, including a stiff beam with a width of 250 mm.

5.1.2.2 Equipment to measure total vertical force applied.

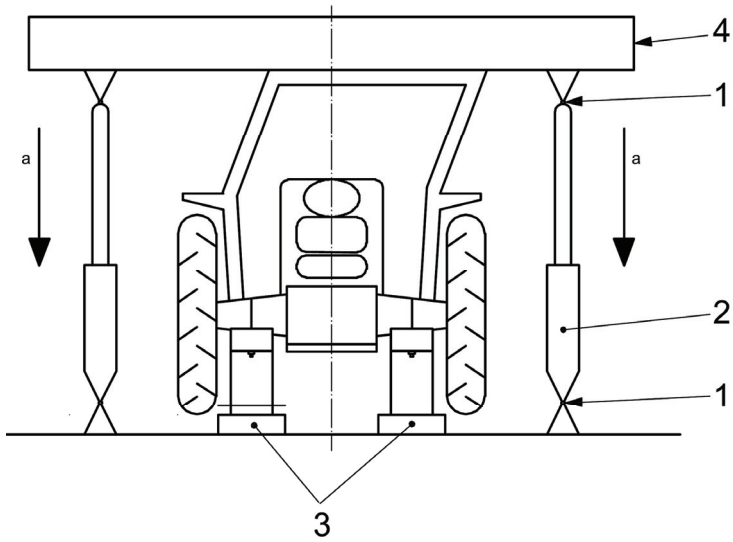

Key
1 universal pin joints
2 hydraulic cylinder
3 supports
4 crushing beam
a direction of force

Figure 2 – Crushing test — Example

5.2 Apparatus for dynamic testing

5.2.1 Device to strike a blow against the protective structure

A pendulum block with mass of 2 000 kg. The pendulum block mass does not include the mass of the chains. The maximum chain mass shall be 100 kg. The dimensions of the block, which shall be suspended from two chains from pivot points 6 m or more above ground level, shall be as shown in Figure 3. The pendulum block centre of gravity shall coincide with its geometric centre.

Documents
Document Sharing Hub
Copyright American Society of Agricultural and Biological Engineers
Provided by IHS Markit under license with ASABE
No reproduction or networking permitted without license from IHS
Licensee=/, User=,
Not for Resale,
Full document details: ASAE ISO 12003-2 2017

Dimensions in millimetres

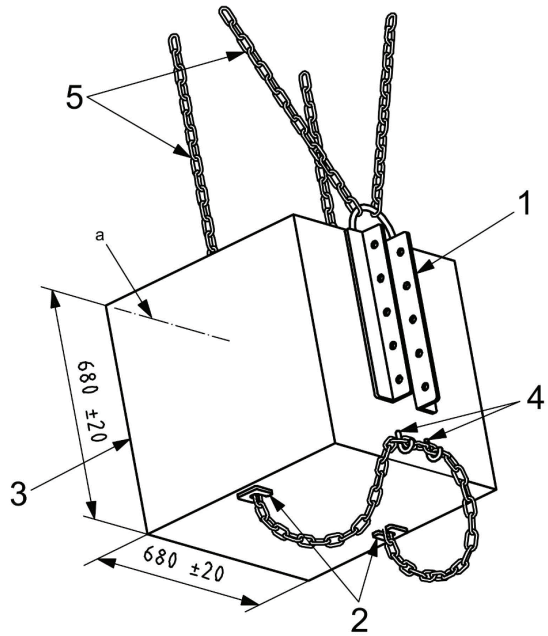

Key
1 attachment for release mechanism
2 height adjustment
3 impact face
4 hooks to hold spare chain
5 pendulum chains
a axis of centre of gravity

Figure 3 – Illustration of pendulum block

5.2.2 Pendulum supports

The pendulum pivot points shall be rigidly fixed such that their displacement in any direction does not exceed 1% of the height of fall.

5.2.3 Means to lash the tractor to the ground

The tractor shall be lashed, by means of steel wire ropes incorporating tensioning devices, to ground rails preferably spaced approximately 600 mm apart throughout the area immediately below the pivot points and extending for approximately 9 m along the pendulum block axis and approximately 1 800 mm to either side. The points of attachment of the lashings shall be approximately 2 000 mm behind the rear axle and 1 500 mm in front of the front axle. There shall be two lashings on each axle, one on each side of the median plane of the tractor. The lashings shall be steel cable of 12,5 mm to 15 mm diameter, tensile strength 1 100 MPa to 1 260 MPa, meeting the requirements of ISO 2408. Details of the lashing means are given in Figures 4, 5, and 6.

The front and rear wheels are not required to be in line if this is more convenient for attaching appropriate ropes.

5.2.4 Softwood beam

A softwood beam, of cross-section 150 mm × 150 mm, to restrain the rear wheels when striking from the front or rear, and to clamp against the side of the front and rear wheels when striking from the side, as shown in Figures 4, 5, and 6.

Documents Document Sharing Hub
Copyright American Society of Agricultural and Biological Engineers
Provided by IHS Markit under license with ASABE
No reproduction or networking permitted without license from IHS
Licensee=/, User=,
Not for Resale,
Full document details: ASAE ISO 12003-2 2017

Dimensions in millimetres

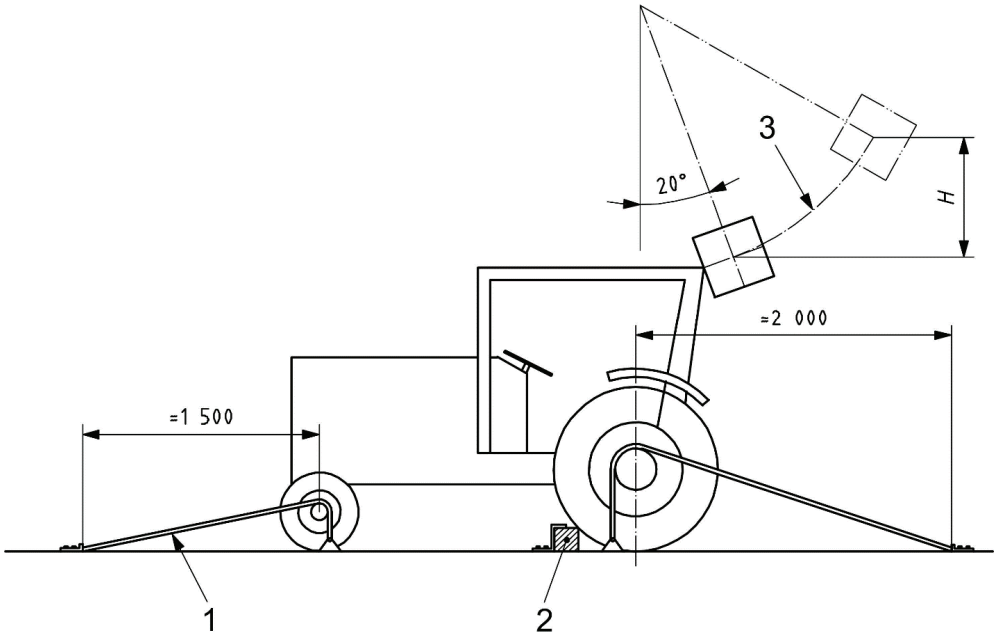

Key

1 positioning tie
2 150 mm square softwood beam clamped behind both rear wheels after anchoring
3 travel arc of pendulum block centre of gravity passing through contact point

Figure 4 – Example of lashing method — Impact from rear

Dimensions in millimetres

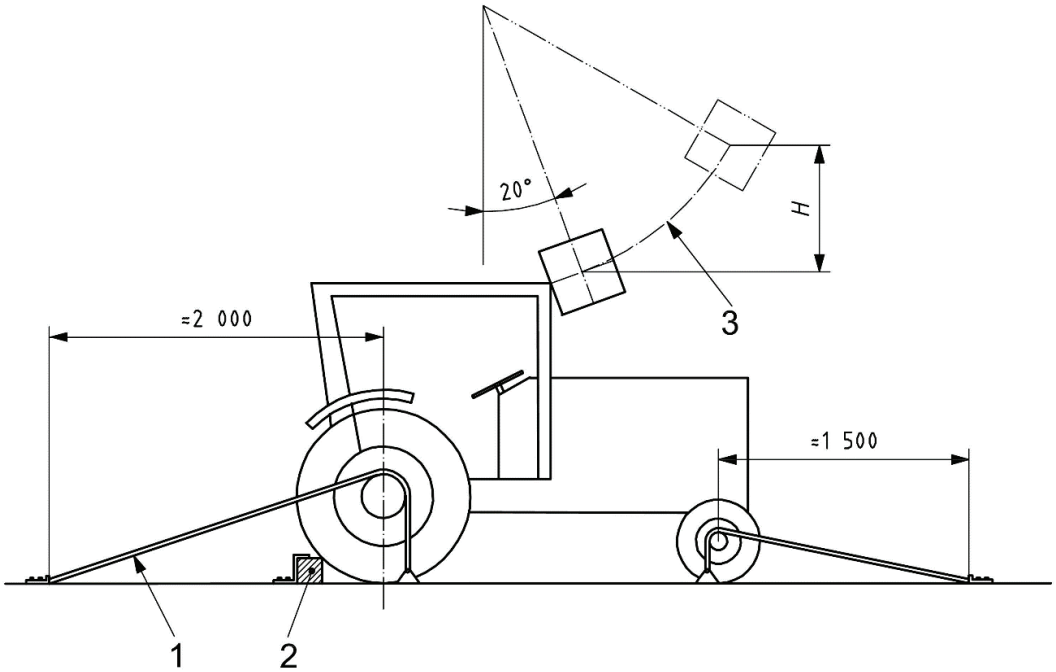

Key

1 positioning tie
2 150 mm square softwood beam clamped behind both rear wheels after anchoring
3 travel arc of pendulum block centre of gravity passing through contact point

Figure 5 – Example of lashing method — Impact from front

Documents
Document Sharing Hub
Copyright American Society of Agricultural and Biological Engineers
Provided by IHS Markit under license with ASABE
No reproduction or networking permitted without license from IHS
Licensee=/, User=,
Not for Resale,
Full document details: ASAE ISO 12003-2 2017

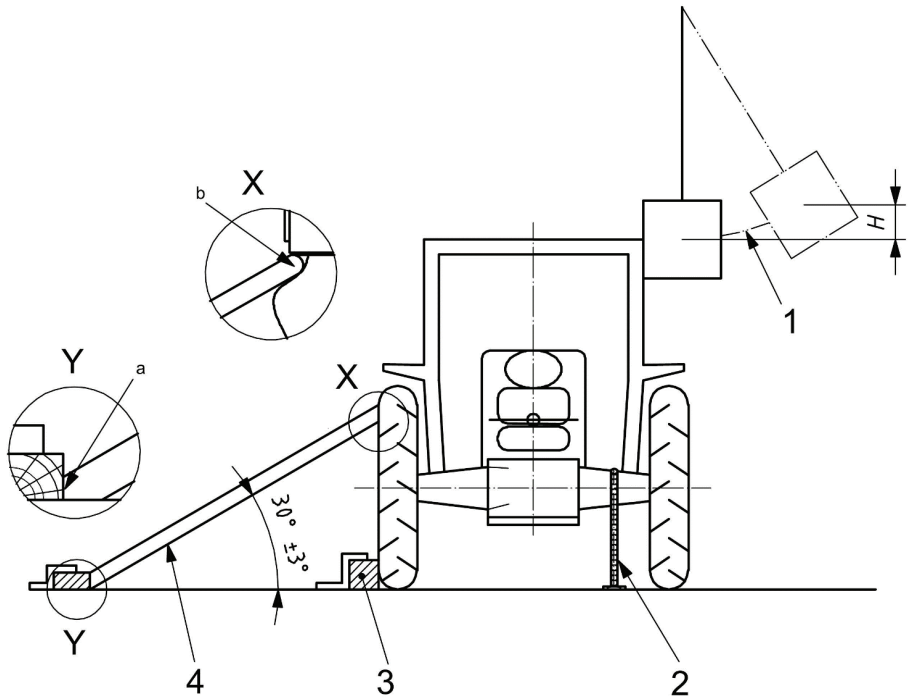

Key

1 travel arc of pendulum block centre of gravity passing through contact point
2 lashing (see 5.2.3)
3 150 mm square softwood beam
4 wooden prop
a chamfered
b rounded to secure contact against rim

Figure 6 – Example of lashing method — Impact from side

5.2.5 Wooden prop

Wooden prop to restrain the opposite rear wheel when striking from the side as shown in Figure 6. Its length shall be 20 to 25 times its thickness and its width 2 to 3 times its thickness.

5.2.6 Props and lashings for articulated tractors

The central pivot of an articulated tractor shall be supported and lashed down as appropriate for all test procedures. For the side impact test procedure, the pivot shall also be propped from the side opposite the impact.

5.2.7 Tyre pressures and deflection

The tractor tyres shall not be liquid-ballasted and shall be inflated to the pressures prescribed by the tractor manufacturer for field work. The lashings shall be tensioned in each particular case such that the tyres undergo a deflection equal to 12% of the tyre wall height (distance between the ground and the lowest point of the rim) before tensioning.

Documents
Document Sharing Hub
Copyright American Society of Agricultural and Biological Engineers
Provided by IHS Markit under license with ASABE
No reproduction or networking permitted without license from IHS
Licensee=/, User=,
Not for Resale,
Full document details: ASAE ISO 12003-2 2017

5.2.8 Device to measure elastic deflection

Device to measure elastic deflection, such as that shown in Figure 7, in a horizontal plane that coincides with the upper limiting surface of the clearance zone.

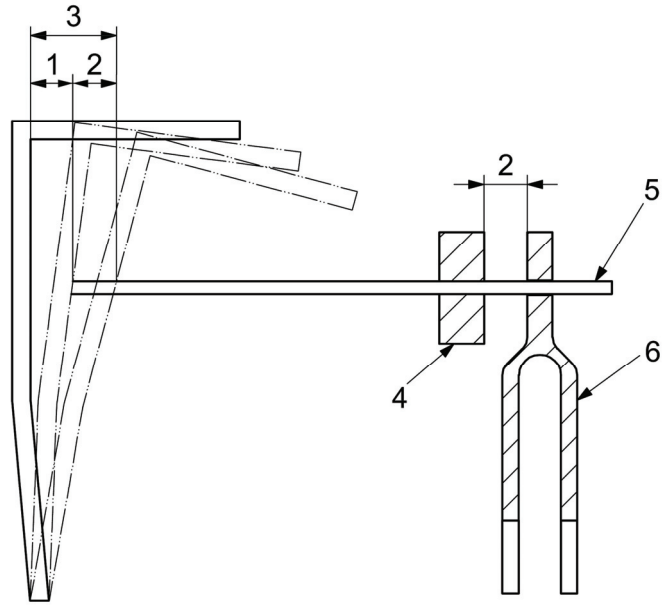

Key
1 permanent deflection
2 elastic deflection
3 total (permanent + elastic) defletion
4 friction collar
5 horizontal rod attached to frame
6 vertical bar attached to tractor chassis

Figure 7 – Apparatus for measuring elastic deflection — Example

5.3 Apparatus for static testing

5.3.1 Material, equipment and attachment means to ensure that the tractor chassis is firmly fixed to the ground (and supported) independently of the tyres.

5.3.2 Means to apply a horizontal force to the ROPS, such as shown in Figures 8 and 9, complying with the requirements of 5.3.2.1 to 5.3.2.4.

5.3.2.1 It shall be ensured that the load can be uniformly distributed normal to the direction of loading and along a beam of length between 250 mm and 700 mm, in an exact multiple of 50 mm.

5.3.2.2 The edges of the beam in contact with the ROPS shall be curved with a maximum radius of 50 mm.

5.3.2.3 Universal joints, or the equivalent, shall be incorporated to ensure that the loading device does not constrain the structure in rotation or translation in any direction other than the loading direction.

5.3.2.4 Where the roll-over protective structure length, covered by the appropriate load-applying beam, does not constitute a straight line normal to the direction of load application, the space shall be packed so as to distribute the load over this length.

5.3.3 Equipment to measure force and deflection along the direction of application of the force and relative to the tractor chassis. To ensure accuracy, measurements shall be taken as continuous recordings. The measuring devices shall be located so as to record the force and deflection at the point of, and along the line of, loading.

Documents
Document Sharing Hub
Copyright American Society of Agricultural and Biological Engineers
Provided by IHS Markit under license with ASABE
No reproduction or networking permitted without license from IHS
Licensee=/, User=,
Not for Resale,
Full document details: ASAE ISO 12003-2 2017

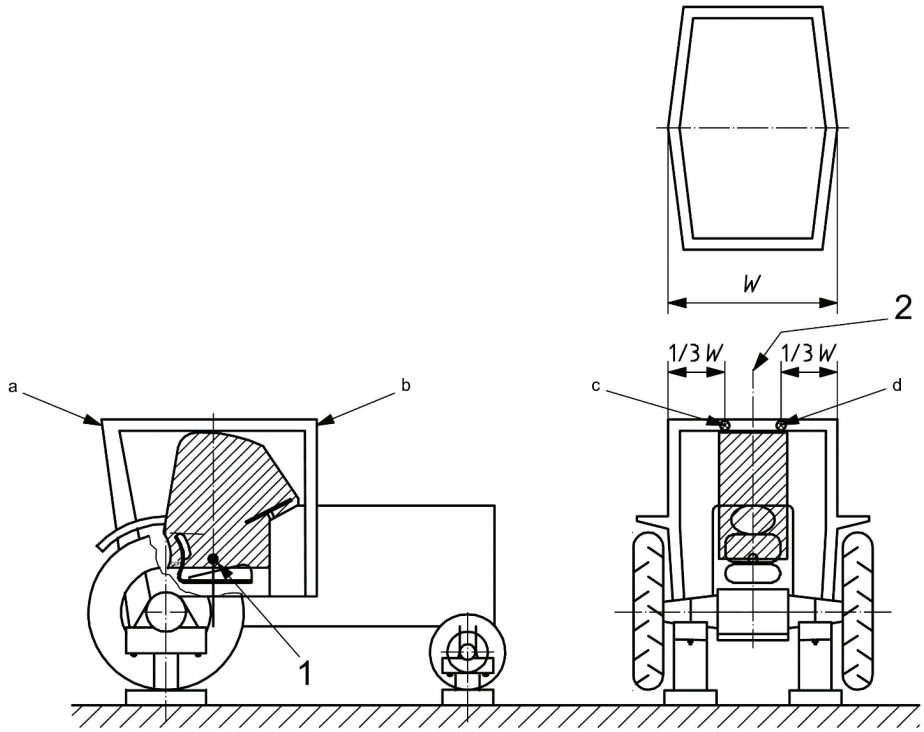

Key

1 seat index point
2 seat index point, longitudinal centre plane
a rear load
b front load
c second longitudinal load, front or rear
d longitudinal load, rear or front

Figure 8 – Front and rear load application

Dimensions in millimetres

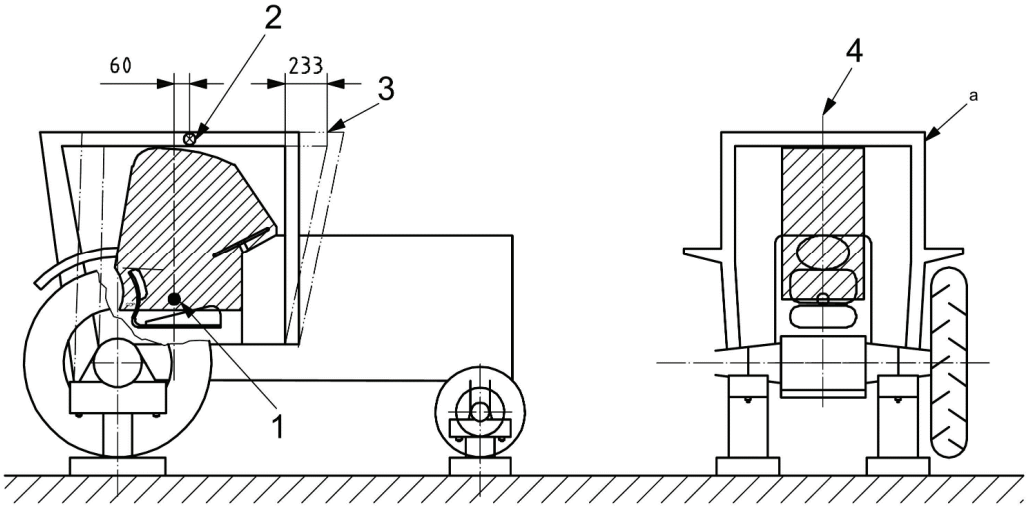

Key

1 seat index point
2 point of side load application (see 7.4.5)
3 deflection due to rear longitudinal loading
4 seat index point, longitudinal centre plane
a load

Figure 9 – Side load application

Documents
Document Sharing Hub
Copyright American Society of Agricultural and Biological Engineers
Provided by IHS Markit under license with ASABE
No reproduction or networking permitted without license from IHS
Licensee=/, User=,
Not for Resale,
Full document details: ASAE ISO 12003-2 2017