ANSI/ASAE S338.5 MAY2006 (R2016)
Field Equipment for Agriculture — Safety Chain for Towed Equipment

American Society of Agricultural and Biological Engineers

STANDARD

ASABE is a professional and technical organization, of members worldwide, who are dedicated to advancement of engineering applicable to agricultural, food, and biological systems. ASABE Standards are consensus documents developed and adopted by the American Society of Agricultural and Biological Engineers to meet standardization needs within the scope of the Society; principally agricultural field equipment, farmstead equipment, structures, soil and water resource management, turf and landscape equipment, forest engineering, food and process engineering, electric power applications, plant and animal environment, and waste management.

NOTE: ASABE Standards, Engineering Practices, and Data are informational and advisory only. Their use by anyone engaged in industry or trade is entirely voluntary. The ASABE assumes no responsibility for results attributable to the application of ASABE Standards, Engineering Practices, and Data. Conformity does not ensure compliance with applicable ordinances, laws and regulations. Prospective users are responsible for protecting themselves against liability for infringement of patents.

ASABE Standards, Engineering Practices, and Data initially approved prior to the society name change in July of 2005 are designated as “ASAE”, regardless of the revision approval date. Newly developed Standards, Engineering Practices and Data approved after July of 2005 are designated as “ASABE”.

Standards designated as “ANSI” are American National Standards as are all ISO adoptions published by ASABE. Adoption as an American National Standard requires verification by ANSI that the requirements for due process, consensus, and other criteria for approval have been met by ASABE.

Consensus is established when, in the judgment of the ANSI Board of Standards Review, substantial agreement has been reached by directly and materially affected interests. Substantial agreement means much more than a simple majority, but not necessarily unanimity. Consensus requires that all views and objections be considered, and that a concerted effort be made toward their resolution.

CAUTION NOTICE: ASABE and ANSI standards may be revised or withdrawn at any time. Additionally, procedures of ASABE require that action be taken periodically to reaffirm, revise, or withdraw each standard.

Copyright American Society of Agricultural and Biological Engineers. All rights reserved.

ASABE, 2950 Niles Road, St. Joseph, MI 49085-9659, USA, phone 269-429-0300, fax 269-429-3852, hq@asabe.org

Documents
Document Sharing Hub

Copyright American Society of Agricultural and Biological Engineers
Provided by IHS Markit under license with ASABE
No reproduction or networking permitted without license from IHS
Full document details: ASAE S338.5 2016

Licensee=/, User=,
Not for Resale,

ANSI/ASAE S338.5 MAY2006 (R2016)
Revision approved MAY 2006; reaffirmed January 2016 as an American National Standard

Field Equipment for Agriculture — Safety Chain for Towed Equipment

Proposed by the Engineering Policy Committee of Farm and Industrial Equipment Institute; approved by ASAE Power and Machinery Division Standards Committee; adopted by ASAE as a Recommendation December 1970; reaffirmed December 1975; reclassified as a Standard March 1978; reaffirmed December 1980; approved as an American National Standard December 1982; revised June 1984, October 1988; revised editorially January 1990; reaffirmed July 1993; revised May 1996, November 1997, May 2006; reaffirmed February 2011, January 2016.

Keywords: Chain, Drawbar, Hitch, Safety

1 Scope

1.1 This Standard covers the specifications for an auxiliary attaching system to retain a connection between towing and towed agricultural field equipment in the event of separation of the primary attaching system long enough to bring the machines to a stop. It should not be construed that this auxiliary system can ensure that control or connection will be maintained in the event of incidents such as loss of control, rollover, jackknife, or collision.

1.2 This Standard applies to all combinations of towing and towed agricultural field equipment when traveling on highways. Requirements for braking of towed equipment and recommendations for maximum travel speeds are given in ASAE S365.6.

2 Normative References

2.1 The following standard contains provisions which, through reference in this text, constitute provisions of this Standard. At the time of publication, the edition was valid. All standards are subject to revision, and parties to agreements based on this Standard are encouraged to investigate the possibility of applying the most recent edition of the standard indicated below. Standards organizations maintain registers of currently valid standards.

2.1.1 ANSI/ASAE S365.6 APR2000, Braking System Test Procedures and Braking Performance Criteria for Agricultural Field Equipment.

2.1.2 ASAE S390.4 JAN2005, Definitions and Classifications of Agricultural Field Equipment.

3 Definitions

3.1 highway: the entire width between the boundary lines of every way publicly maintained when any part thereof is open to use of the public for purposes of vehicular travel (Uniform Vehicle Code)

3.2 agricultural field equipment: agricultural tractors, self propelled machines, implements, and combinations thereof designed primarily for agricultural field operations. ASAE S390.4 provides definitions for types of agricultural field equipment. In this standard, machine refers to agricultural field equipment.

Documents
Document Sharing Hub
Copyright American Society of Agricultural and Biological Engineers
Provided by IHS Markit under license with ASABE
No reproduction or networking permitted without license from IHS
Licensee=/, User=,
Not for Resale,
Full document details: ASAE S338.5 2016

3.3 towing machine: any unit of agricultural field equipment that furnishes the forces necessary to move and control a towed machine

3.4 towed machine: any unit of agricultural field equipment whose motive force and directional control is derived from one point of attachment to a towing machine. In a series of more than two machines, the same unit may be both a towed and a towing machine.

3.5 primary attaching system: the means by which the motive and controlling forces are transferred from the towing to the towed machine under ordinary operating circumstances. The primary attaching point is the principal location of articulation in the system.

3.6 auxiliary attaching system: a supplementary attaching means intended to retain a connection between the towing and towed machines in the event of failure of the primary attaching system. A safety chain is the preferred means for providing an auxiliary attaching system function. While the use of chain is preferred, nothing in this standard shall require the use of a chain, or preclude the use of an alternate attachment system which will effectively maintain connection between towing and towed machines in the event of separation of the primary attaching system as defined above and meet the system specifications outlined in section 5.

3.7 safety chain: a chain, of designated size and strength, equipped with a latching hook on one end and a suitable attachment link on the other end for permanent chain installations. Pass through links may be used for the attachment link for non permanent installations.

4 Safety Chain Specifications

4.1 The safety chain, its hook, and its end fitting including pins shall conform to the specifications given in Table 1 and illustrated in Figure 3. Other alternative configurations for end fittings and hooks are permissible as long as the chain can be securely retained by the latching mechanism regardless of chain tension. The hook must stay in contact with the same chain link as originally connected.

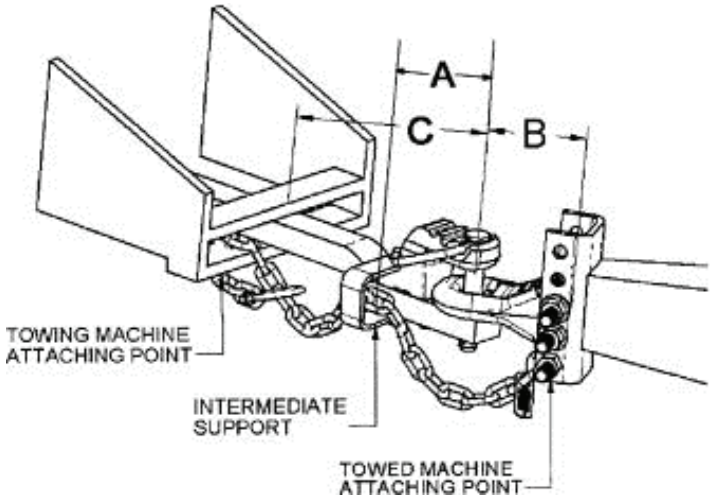

Figure 1 – Example auxiliary attaching system with intermediate support

Documents
Document Sharing Hub
Copyright American Society of Agricultural and Biological Engineers
Provided by IHS Markit under license with ASABE
No reproduction or networking permitted without license from IHS
Licensee=/, User=,
Not for Resale,
Full document details: ASAE S338.5 2016