This international standard was developed in accordance with internationally recognized principles on standardization established in the Decision on Principles for the Development of International Standards, Guides and Recommendations issued by the World Trade Organization Technical Barriers to Trade (TBT) Committee.

Designation: A370 – 23

# Standard Test Methods and Definitions for Mechanical Testing of Steel Products[1]

This standard is issued under the fixed designation A370; the number immediately following the designation indicates the year of original adoption or, in the case of revision, the year of last revision. A number in parentheses indicates the year of last reapproval. A superscript epsilon (ε) indicates an editorial change since the last revision or reapproval.

*This standard has been approved for use by agencies of the U.S. Department of Defense.*

## 1. Scope*

1.1 These test methods[2] cover procedures and definitions for the mechanical testing of steels, stainless steels, and related alloys. The various mechanical tests herein described are used to determine properties required in the product specifications. Variations in testing methods are to be avoided, and standard methods of testing are to be followed to obtain reproducible and comparable results. In those cases in which the testing requirements for certain products are unique or at variance with these general procedures, the product specification testing requirements shall control.

1.2 The following mechanical tests are described:

| | Sections |
|---|---|
| Tension | 7 to 14 |
| Bend | 15 |
| Hardness | 16 |
| Brinell | 17 |
| Rockwell | 18 |
| Portable | 19 |
| Impact | 20 to 30 |
| Keywords | 32 |

1.3 Annexes covering details peculiar to certain products are appended to these test methods as follows:

| | Annex |
|---|---|
| Bar Products | Annex A1 |
| Tubular Products | Annex A2 |
| Fasteners | Annex A3 |
| Round Wire Products | Annex A4 |
| Significance of Notched-Bar Impact Testing | Annex A5 |
| Converting Percentage Elongation of Round Specimens to Equivalents for Flat Specimens | Annex A6 |
| Testing Multi-Wire Strand | Annex A7 |
| Rounding of Test Data | Annex A8 |
| Methods for Testing Steel Reinforcing Bars | Annex A9 |
| Procedure for Use and Control of Heat-cycle Simulation | Annex A10 |

1.4 The values stated in inch-pound units are to be regarded as standard. The values given in parentheses are mathematical conversions to SI units that are provided for information only and are not considered standard.

1.5 When these test methods are referenced in a metric product specification, the yield and tensile values may be determined in inch-pound (ksi) units then converted into SI (MPa) units. The elongation determined in inch-pound gauge lengths of 2 in. or 8 in. may be reported in SI unit gauge lengths of 50 mm or 200 mm, respectively, as applicable. Conversely, when these test methods are referenced in an inch-pound product specification, the yield and tensile values may be determined in SI units then converted into inch-pound units. The elongation determined in SI unit gauge lengths of 50 mm or 200 mm may be reported in inch-pound gauge lengths of 2 in. or 8 in., respectively, as applicable.

1.5.1 The specimen used to determine the original units must conform to the applicable tolerances of the original unit system given in the dimension table not that of the converted tolerance dimensions.

NOTE 1—This is due to the specimen SI dimensions and tolerances being hard conversions when this is not a dual standard. The user is directed to Test Methods A1058 if the tests are required in SI units.

1.6 Attention is directed to ISO/IEC 17025 when there may be a need for information on criteria for evaluation of testing laboratories.

1.7 *This standard does not purport to address all of the safety concerns, if any, associated with its use. It is the responsibility of the user of this standard to establish appropriate safety, health, and environmental practices and determine the applicability of regulatory limitations prior to use.*

1.8 *This international standard was developed in accordance with internationally recognized principles on standardization established in the Decision on Principles for the Development of International Standards, Guides and Recommendations issued by the World Trade Organization Technical Barriers to Trade (TBT) Committee.*

[1] These test methods and definitions are under the jurisdiction of ASTM Committee A01 on Steel, Stainless Steel and Related Alloys and are the direct responsibility of Subcommittee A01.13 on Mechanical and Chemical Testing and Processing Methods of Steel Products and Processes.

Current edition approved Sept. 15, 2023. Published September 2023. Originally approved in 1953. Last previous edition approved in 2022 as A370 – 22. DOI: 10.1520/A0370-23.

[2] For *ASME Boiler and Pressure Vessel Code* applications see related Specification SA-370 in Section II of that Code.

***A Summary of Changes section appears at the end of this standard**

Copyright © ASTM International, 100 Barr Harbor Drive, PO Box C700, West Conshohocken, PA 19428-2959. United States



Documents
Document Sharing Hub
Full document details: ASTM A370-23

## 2. Referenced Documents

2.1 *ASTM Standards:*[3]

A623 Specification for Tin Mill Products, General Requirements

A623M Specification for Tin Mill Products, General Requirements [Metric]

A833 Test Method for Indentation Hardness of Metallic Materials by Comparison Hardness Testers

A941 Terminology Relating to Steel, Stainless Steel, Related Alloys, and Ferroalloys

A956/A956M Test Method for Leeb Hardness Testing of Steel Products

A1038 Test Method for Portable Hardness Testing by the Ultrasonic Contact Impedance Method

A1058 Test Methods for Mechanical Testing of Steel Products—Metric

A1061/A1061M Test Methods for Testing Multi-Wire Steel Prestressing Strand

E4 Practices for Force Calibration and Verification of Testing Machines

E6 Terminology Relating to Methods of Mechanical Testing

E8/E8M Test Methods for Tension Testing of Metallic Materials

E10 Test Method for Brinell Hardness of Metallic Materials

E18 Test Methods for Rockwell Hardness of Metallic Materials

E23 Test Methods for Notched Bar Impact Testing of Metallic Materials

E29 Practice for Using Significant Digits in Test Data to Determine Conformance with Specifications

E83 Practice for Verification and Classification of Extensometer Systems

E110 Test Method for Rockwell and Brinell Hardness of Metallic Materials by Portable Hardness Testers

E190 Test Method for Guided Bend Test for Ductility of Welds

E290 Test Methods for Bend Testing of Material for Ductility

2.2 *ASME Document:*[4]

ASME Boiler and Pressure Vessel Code, Section VIII, Division I, Part UG-8

2.3 *ISO Standard:*[5]

ISO/IEC 17025 General Requirements for the Competence of Testing and Calibration Laboratories

## 3. Terminology

3.1 *Definitions:*

3.1.1 For definitions of terms pertaining to mechanical testing of steel products not otherwise listed in this section, reference shall be made to Terminology E6 and Terminology A941.

3.2 *Definitions of Terms Specific to This Standard:*

3.2.1 *fixed-location hardness testing machine, n*—a hardness testing machine that is designed for routine operation in a fixed-location by the users and is not designed to be transported, or carried, or moved.

3.2.1.1 *Discussion*—Typically due to its heavy weight and large size, a fixed-location hardness testing machine is placed in one location and not routinely moved.

3.2.2 *longitudinal test, n*—unless specifically defined otherwise, signifies that the lengthwise axis of the specimen is parallel to the direction of the greatest extension of the steel during rolling or forging.

3.2.2.1 *Discussion*—The stress applied to a longitudinal tension test specimen is in the direction of the greatest extension, and the axis of the fold of a longitudinal bend test specimen is at right angles to the direction of greatest extension (see Fig. 1, Fig. 2a, and Fig. 2b).

3.2.3 *portable hardness testing machine,, n*—a hardness testing machine that is designed to be transported, carried, set up, and that measures hardness in accordance with the test methods in Section 19.

3.2.4 *radial test, n*—unless specifically defined otherwise, signifies that the lengthwise axis of the specimen is perpendicular to the axis of the product and coincident with one of the radii of a circle drawn with a point on the axis of the product as a center (see Fig. 2a).

3.2.5 *tangential test, n*—unless specifically defined otherwise, signifies that the lengthwise axis of the specimen perpendicular to a plane containing the axis of the product and tangent to a circle drawn with a point on the axis of the productas a center (see Fig. 2a, Fig. 2b, Fig. 2c, and Fig. 2d).

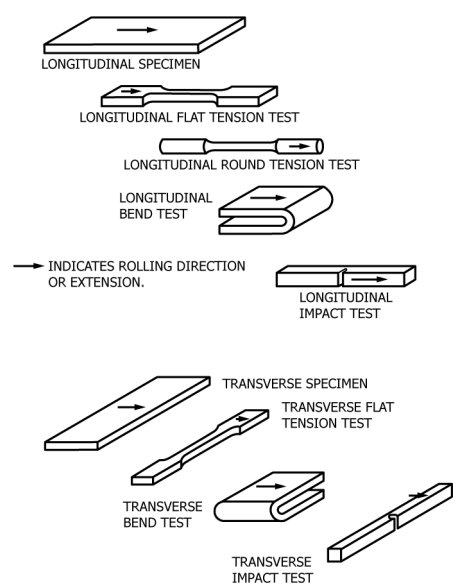


**FIG. 1 Relation of Test Coupons and Test Specimens to Rolling Direction or Extension (Applicable to General Wrought Products)**

[3] For referenced ASTM standards, visit the ASTM website, www.astm.org, or contact ASTM Customer Service at service@astm.org. For *Annual Book of ASTM Standards* volume information, refer to the standard's Document Summary page on the ASTM website.

[4] Available from American Society of Mechanical Engineers (ASME), ASME International Headquarters, Two Park Ave., New York, NY 10016-5990, http://www.asme.org.

[5] Available from International Organization for Standardization (ISO), ISO Central Secretariat, BIBC II, Chemin de Blandonnet 8, CP 401, 1214 Vernier, Geneva, Switzerland, http://www.iso.org.



AVA Documents
Document Sharing Hub
Full document details: ASTM A370-23

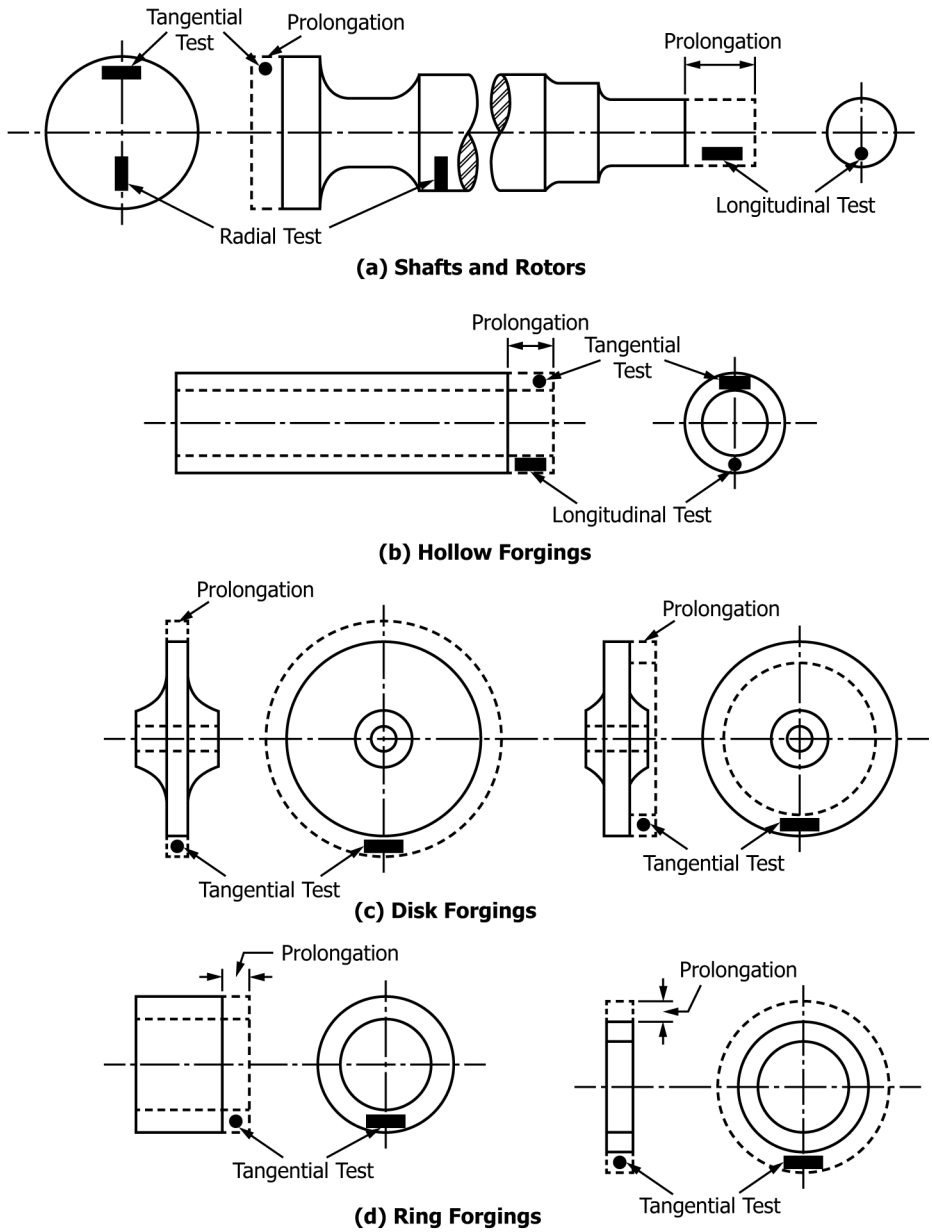


**FIG. 2 Location of Longitudinal Tension Test Specimens in Rings Cut From Tubular Products**

3.2.6 *transition temperature, n*—for specification purposes, the transition temperature is the temperature at which the designated material test value equals or exceeds a specified minimum test value.

3.2.6.1 *Discussion*—Some of the many definitions of transition temperature currently being used are: (*1*) the lowest temperature at which the specimen exhibits 100 % fibrous fracture, (*2*) the temperature where the fracture shows a 50 % crystalline and a 50 % fibrous appearance, (*3*) the temperature corresponding to the energy value 50 % of the difference between values obtained at 100 % and 0 % fibrous fracture, and (*4*) the temperature corresponding to a specific energy value.

3.2.7 *transverse test, n*—unless specifically defined otherwise, signifies that the lengthwise axis of the specimen is right angles to the direction of the greatest extension of the steel during rolling or forging.

3.2.7.1 *Discussion*—The stress applied to a transverse tension test specimen is at right angles to the greatest extension, and the axis of the fold of a transverse bend test specimen is parallel to the greatest extension (see Fig. 1).

Documents
Document Sharing Hub



Full document details: ASTM A370-23

3.3 *Definition of Terms Specific to the Procedure for Use and Control of Heat-cycle Simulation (See Annex A9):*

3.3.1 *master chart, n*—a record of the heat treatment received from a forging essentially identical to the production forgings that it will represent.

3.3.1.1 *Discussion*—It is a chart of time and temperature showing the output from thermocouples imbedded in the forging at the designated test immersion and test location or locations.

3.3.2 *program chart, n*—the metallized sheet used to program the simulator unit.

3.3.2.1 *Discussion*—Time-temperature data from the master chart are manually transferred to the program chart.

3.3.3 *simulator chart, n*—a record of the heat treatment that a test specimen had received in the simulator unit.

3.3.3.1 *Discussion*—It is a chart of time and temperature and can be compared directly to the master chart for accuracy of duplication.

3.3.4 *simulator cycle, n*—one continuous heat treatment of a set of specimens in the simulator unit.

3.3.4.1 *Discussion*—The cycle includes heating from ambient, holding at temperature, and cooling. For example, a simulated austenitize and quench of a set of specimens would be one cycle; a simulated temper of the same specimens would be another cycle.

## 4. Significance and Use

4.1 The primary use of these test methods is testing to determine the specified mechanical properties of steel, stainless steel, and related alloy products for the evaluation of conformance of such products to a material specification under the jurisdiction of ASTM Committee A01 and its subcommittees as designated by a purchaser in a purchase order or contract.

4.1.1 These test methods may be and are used by other ASTM Committees and other standards writing bodies for the purpose of conformance testing.

4.1.2 The material condition at the time of testing, sampling frequency, specimen location and orientation, reporting requirements, and other test parameters are contained in the pertinent material specification or in a general requirement specification for the particular product form.

4.1.3 Some material specifications require the use of additional test methods not described herein; in such cases, the required test method is described in that material specification or by reference to another appropriate test method standard.

4.2 These test methods are also suitable to be used for testing of steel, stainless steel and related alloy materials for other purposes, such as incoming material acceptance testing by the purchaser or evaluation of components after service exposure.

4.2.1 As with any mechanical testing, deviations from either specification limits or expected as-manufactured properties can occur for valid reasons besides deficiency of the original as-fabricated product. These reasons include, but are not limited to: subsequent service degradation from environmental exposure (for example, temperature, corrosion); static or cyclic service stress effects, mechanically-induced damage, material inhomogeneity, anisotropic structure, natural aging of select alloys, further processing not included in the specification, sampling limitations, and measuring equipment calibration uncertainty. There is statistical variation in all aspects of mechanical testing and variations in test results from prior tests are expected. An understanding of possible reasons for deviation from specified or expected test values should be applied in interpretation of test results.

## 5. General Precautions

5.1 Certain methods of fabrication, such as bending, forming, and welding, or operations involving heating, may affect the properties of the material under test. Therefore, the product specifications cover the stage of manufacture at which mechanical testing is to be performed. The properties shown by testing prior to fabrication may not necessarily be representative of the product after it has been completely fabricated.

5.2 Improperly machined specimens should be discarded and other specimens substituted.

5.3 Flaws in the specimen may also affect results. If any test specimen develops flaws, the retest provision of the applicable product specification shall govern.

5.4 If any test specimen fails because of mechanical reasons such as failure of testing equipment or improper specimen preparation, it may be discarded and another specimen taken.

## 6. Orientation of Test Specimens

6.1 The terms "longitudinal test" and "transverse test" are used only in material specifications for wrought products and are not applicable to castings. When such reference is made to a test coupon or test specimen, see Section 3 for terms and definitions.

# TENSION TEST

## 7. Description

7.1 The tension test related to the mechanical testing of steel products subjects a machined or full-section specimen of the material under examination to a measured load sufficient to cause rupture. The resulting properties sought are defined in Terminology E6.

7.2 In general, the testing equipment and methods are given in Test Methods E8/E8M. However, there are certain exceptions to Test Methods E8/E8M practices in the testing of steel, and these are covered in these test methods.

## 8. Testing Apparatus and Operations

8.1 *Loading Systems*—There are two general types of loading systems, mechanical (screw power) and hydraulic. These differ chiefly in the variability of the rate of load application. The older screw power machines are limited to a small number of fixed free running crosshead speeds. Some modern screw power machines, and all hydraulic machines permit stepless variation throughout the range of speeds.

8.2 The tension testing machine shall be maintained in good operating condition, used only in the proper loading range, and calibrated periodically in accordance with the latest revision of Practices E4.

AVA Documents
Document Sharing Hub



Full document details: ASTM A370-23

NOTE 2—Many machines are equipped with stress-strain recorders for autographic plotting of stress-strain curves. It should be noted that some recorders have a load measuring component entirely separate from the load indicator of the testing machine. Such recorders are calibrated separately.

8.3 *Loading*—It is the function of the gripping or holding device of the testing machine to transmit the load from the heads of the machine to the specimen under test. The essential requirement is that the load shall be transmitted axially. This implies that the centers of the action of the grips shall be in alignment, insofar as practicable, with the axis of the specimen at the beginning and during the test and that bending or twisting be held to a minimum. For specimens with a reduced section, gripping of the specimen shall be restricted to the grip section. In the case of certain sections tested in full size, nonaxial loading is unavoidable and in such cases shall be permissible.

8.4 *Speed of Testing*—The speed of testing shall not be greater than that at which load and strain readings can be made accurately. In production testing, speed of testing is commonly expressed: (*1*) in terms of free running crosshead speed (rate of movement of the crosshead of the testing machine when not under load), (*2*) in terms of rate of separation of the two heads of the testing machine under load, (*3*) in terms of rate of stressing the specimen, or (*4*) in terms of rate of straining the specimen. The following limitations on the speed of testing are recommended as adequate for most steel products:

NOTE 3—Tension tests using closed-loop machines (with feedback control of rate) should not be performed using load control, as this mode of testing will result in acceleration of the crosshead upon yielding and elevation of the measured yield strength.

8.4.1 Any convenient speed of testing may be used up to one half the specified yield point or yield strength. When this point is reached, the free-running rate of separation of the crossheads shall be adjusted so as not to exceed 1⁄16 in. per min per inch of reduced section, or the distance between the grips for test specimens not having reduced sections. This speed shall be maintained through the yield point or yield strength. In determining the tensile strength, the free-running rate of separation of the heads shall not exceed ½ in. per min per inch of reduced section, or the distance between the grips for test specimens not having reduced sections. In any event, the minimum speed of testing shall not be less than 1⁄10 the specified maximum rates for determining yield point or yield strength and tensile strength.

8.4.2 It shall be permissible to set the speed of the testing machine by adjusting the free running crosshead speed to the above specified values, inasmuch as the rate of separation of heads under load at these machine settings is less than the specified values of free running crosshead speed.

8.4.3 As an alternative, if the machine is equipped with a device to indicate the rate of loading, the speed of the machine from half the specified yield point or yield strength through the yield point or yield strength may be adjusted so that the rate of stressing does not exceed 100 000 psi (690 MPa)/min. However, the minimum rate of stressing shall not be less than 10 000 psi (70 MPa)/min.

## 9. Test Specimen Parameters

9.1 *Selection*—Test coupons shall be selected in accordance with the applicable product specifications.

9.1.1 *Wrought Steels*—Wrought steel products are usually tested in the longitudinal direction, but in some cases, where size permits and the service justifies it, testing is in the transverse, radial, or tangential directions (see Figs. 1 and 2).

9.1.2 *Forged Steels*—For open die forgings, the metal for tension testing is usually provided by allowing extensions or prolongations on one or both ends of the forgings, either on all or a representative number as provided by the applicable product specifications. Test specimens are normally taken at mid-radius. Certain product specifications permit the use of a representative bar or the destruction of a production part for test purposes. For ring or disk-like forgings test metal is provided by increasing the diameter, thickness, or length of the forging. Upset disk or ring forgings, which are worked or extended by forging in a direction perpendicular to the axis of the forging, usually have their principal extension along concentric circles and for such forgings tangential tension specimens are obtained from extra metal on the periphery or end of the forging. For some forgings, such as rotors, radial tension tests are required. In such cases the specimens are cut or trepanned from specified locations.

9.2 *Size and Tolerances*—Test specimens shall be (*1*) the full cross section of material, or (*2*) machined to the form and dimensions shown in Figs. 3-6. The selection of size and type of specimen is prescribed by the applicable product specification. Full cross section specimens shall be tested in 8-in. (200 mm) gauge length unless otherwise specified in the product specification.

9.3 *Procurement of Test Specimens*—Specimens shall be extracted by any convenient method taking care to remove all distorted, cold-worked, or heat-affected areas from the edges of the section used in evaluating the material. Specimens usually have a reduced cross section at mid-length to ensure uniform distribution of the stress over the cross section and localize the zone of fracture.

9.4 *Aging of Test Specimens*—Unless otherwise specified, it shall be permissible to age tension test specimens. The time-temperature cycle employed must be such that the effects of previous processing will not be materially changed. It may be accomplished by aging at room temperature 24 h to 48 h, or in shorter time at moderately elevated temperatures by boiling in water, heating in oil or in an oven.

9.5 *Measurement of Dimensions of Test Specimens:*

9.5.1 *Standard Rectangular Tension Test Specimens*—These forms of specimens are shown in Fig. 3. To determine the cross-sectional area, the center width dimension shall be measured to the nearest 0.005 in. (0.13 mm) for the 8-in. (200 mm) gauge length specimen and 0.001 in. (0.025 mm) for the 2-in. (50 mm) gauge length specimen in Fig. 3. The center thickness dimension shall be measured to the nearest 0.001 in. for both specimens.

9.5.2 *Standard Round Tension Test Specimens*—These forms of specimens are shown in Fig. 4 and Fig. 5. To determine the cross-sectional area, the diameter shall be

AVA Documents
Document Sharing Hub



Full document details: ASTM A370-23

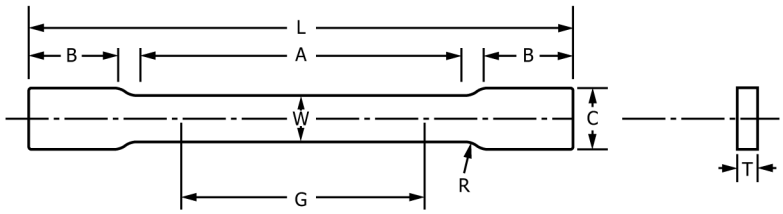


DIMENSIONS

| | Standard Specimens | | | | | | Subsize Specimen | |
|---|---|---|---|---|---|---|---|---|
| | Plate-type, 1½-in. (40 mm) Wide | | | | | | | |
| | 8-in. (200 mm) Gauge Length | | 2-in. (50 mm) Gauge Length | | Sheet-type, ½ in. (12.5 mm) Wide | | ¼-in. (6 mm) Wide | |
| | in. | mm | in. | mm | in. | mm | in. | mm |
| *G*—Gauge length (Notes 1 and 2) | 8.00 ± 0.01 | 200 ± 0.25 | 2.000 ± 0.005 | 50.0 ± 0.10 | 2.000 ± 0.005 | 50.0 ± 0.10 | 1.000 ± 0.003 | 25.0 ± 0.08 |
| *W*—Width (Notes 3, 5, and 6) | 1½ + ⅛ −¼ | 40 + 3 −6 | 1½ + ⅛ − ¼ | 40 + 3 −6 | 0.500 ± 0.010 | 12.5 ± 0.25 | 0.250 ± 0.002 | 6.25 ± 0.05 |
| *T*—Thickness (Note 7) | Thickness of Material | | | | | | | |
| *R*—Radius of fillet, min (Note 4) | ½ | 13 | ½ | 13 | ½ | 13 | ¼ | 6 |
| *L*—Overall length, min (Notes 2 and 8) | 18 | 450 | 8 | 200 | 8 | 200 | 4 | 100 |
| *A*—Length of reduced section, min | 9 | 225 | 2¼ | 60 | 2¼ | 60 | 1¼ | 32 |
| *B*—Length of grip section, min (Note 9) | 3 | 75 | 2 | 50 | 2 | 50 | 1¼ | 32 |
| *C*—Width of grip section, approximate (Note 4, Note 10, and Note 11) | 2 | 50 | 2 | 50 | ¾ | 20 | ⅜ | 10 |

NOTE 1—For the 1½-in. (40 mm) wide specimens, punch marks for measuring elongation after fracture shall be made on the flat or on the edge of the specimen and within the reduced section. For the 8-in. (200 mm) gauge length specimen, a set of nine or more punch marks 1 in. (25 mm) apart, or one or more pairs of punch marks 8 in. (200 mm) apart may be used. For the 2-in. (50 mm) gauge length specimen, a set of three or more punch marks 1 in. (25 mm) apart, or one or more pairs of punch marks 2 in. (50 mm) apart may be used.

NOTE 2—For the ½-in. (12.5 mm) wide specimen, punch marks for measuring the elongation after fracture shall be made on the flat or on the edge of the specimen and within the reduced section. Either a set of three or more punch marks 1 in. (25 mm) apart or one or more pairs of punch marks 2 in. (50 mm) apart may be used.

NOTE 3—For the four sizes of specimens, the ends of the reduced section shall not differ in width by more than 0.004 in., 0.004 in., 0.002 in., or 0.001 in. (0.10 mm, 0.10 mm, 0.05 mm, or 0.025 mm), respectively. Also, there may be a gradual decrease in width from the ends to the center, but the width at either end shall not be more than 0.015 in., 0.015 in., 0.005 in., or 0.003 in. (0.40 mm, 0.40 mm, 0.10 mm, or 0.08 mm), respectively, larger than the width at the center.

NOTE 4—For each specimen type, the radii of all fillets shall be equal to each other with a tolerance of 0.05 in. (1.25 mm), and the centers of curvature of the two fillets at a particular end shall be located across from each other (on a line perpendicular to the centerline) within a tolerance of 0.10 in. (2.5 mm).

NOTE 5—For each of the four sizes of specimens, narrower widths (*W* and *C*) may be used when necessary. In such cases, the width of the reduced section should be as large as the width of the material being tested permits; however, unless stated specifically, the requirements for elongation in a product specification shall not apply when these narrower specimens are used. If the width of the material is less than *W*, the sides may be parallel throughout the length of the specimen.

NOTE 6—The specimen may be modified by making the sides parallel throughout the length of the specimen, the width and tolerances being the same as those specified above. When necessary, a narrower specimen may be used, in which case the width should be as great as the width of the material being tested permits. If the width is 1½ in. (38 mm) or less, the sides may be parallel throughout the length of the specimen.

NOTE 7—The dimension *T* is the thickness of the test specimen as provided for in the applicable product specification. Minimum nominal thickness of 1 in. to 1½-in. (40 mm) wide specimens shall be 3⁄16 in. (5 mm), except as permitted by the product specification. Maximum nominal thickness of ½-in. (12.5 mm) and ¼-in. (6 mm) wide specimens shall be 1 in. (25 mm) and ¼ in. (6 mm), respectively.

NOTE 8—To aid in obtaining axial loading during testing of ¼-in. (6 mm) wide specimens, the overall length should be as large as the material will permit.

NOTE 9—It is desirable, if possible, to make the length of the grip section large enough to allow the specimen to extend into the grips a distance equal to two thirds or more of the length of the grips. If the thickness of ½-in. (13 mm) wide specimens is over ⅜ in. (10 mm), longer grips and correspondingly longer grip sections of the specimen may be necessary to prevent failure in the grip section.

NOTE 10—For standard sheet-type specimens and subsize specimens, the ends of the specimen shall be symmetrical with the center line of the reduced section within 0.01 in. and 0.005 in. (0.25 mm and 0.13 mm), respectively, except that for steel if the ends of the ½-in. (12.5 mm) wide specimen are symmetrical within 0.05 in. (1.0 mm), a specimen may be considered satisfactory for all but referee testing.

NOTE 11—For standard plate-type specimens, the ends of the specimen shall be symmetrical with the center line of the reduced section within 0.25 in. (6.35 mm), except for referee testing in which case the ends of the specimen shall be symmetrical with the center line of the reduced section within 0.10 in. (2.5 mm).

**FIG. 3 Rectangular Tension Test Specimens**

AVA Documents
Document Sharing Hub



Full document details: ASTM A370-23

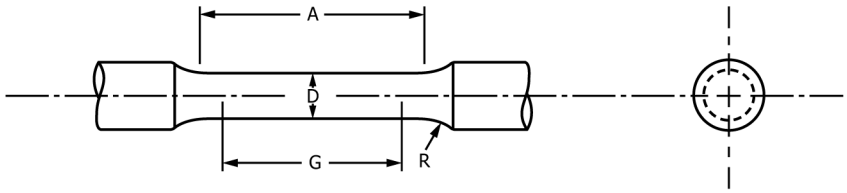


DIMENSIONS

| Nominal Diameter | Standard Specimen | | Small-size Specimens Proportional to Standard | | | | | | | |
|---|---|---|---|---|---|---|---|---|---|---|
| | in. | mm | in. | mm | in. | mm | in. | mm | in. | mm |
| | 0.500 | 12.5 | 0.350 | 8.75 | 0.250 | 6.25 | 0.160 | 4.00 | 0.113 | 2.50 |
| *G*—Gauge length | 2.00± 0.005 | 50.0 ± 0.10 | 1.400± 0.005 | 35.0 ± 0.10 | 1.000± 0.005 | 25.0 ± 0.10 | 0.640± 0.005 | 16.0 ± 0.10 | 0.450± 0.005 | 10.0 ± 0.10 |
| *D*—Diameter (Note 1) | 0.500± 0.010 | 12.5± 0.25 | 0.350± 0.007 | 8.75 ± 0.18 | 0.250± 0.005 | 6.25 ± 0.12 | 0.160± 0.003 | 4.00 ± 0.08 | 0.113± 0.002 | 2.50 ± 0.05 |
| *R*—Radius of fillet, min | 3/8 | 10 | 1/4 | 6 | 3/16 | 5 | 5/32 | 4 | 3/32 | 2 |
| *A*—Length of reduced section, min (Note 2) | 2 1/4 | 60 | 1 3/4 | 45 | 1 1/4 | 32 | 3/4 | 20 | 5/8 | 16 |

NOTE 1—The reduced section may have a gradual taper from the ends toward the center, with the ends not more than 1 % larger in diameter than the center (controlling dimension).

NOTE 2—If desired, the length of the reduced section may be increased to accommodate an extensometer of any convenient gauge length. Reference marks for the measurement of elongation should, nevertheless, be spaced at the indicated gauge length.

NOTE 3—The gauge length and fillets shall be as shown, but the ends may be of any form to fit the holders of the testing machine in such a way that the load shall be axial (see Fig. 9). If the ends are to be held in wedge grips it is desirable, if possible, to make the length of the grip section great enough to allow the specimen to extend into the grips a distance equal to two thirds or more of the length of the grips.

NOTE 4—On the round specimens in Fig. 5 and Fig. 6, the gauge lengths are equal to four times the nominal diameter. In some product specifications other specimens may be provided for, but unless the 4-to-1 ratio is maintained within dimensional tolerances, the elongation values may not be comparable with those obtained from the standard test specimen.

NOTE 5—The use of specimens smaller than 0.250-in. (6.25 mm) diameter shall be restricted to cases when the material to be tested is of insufficient size to obtain larger specimens or when all parties agree to their use for acceptance testing. Smaller specimens require suitable equipment and greater skill in both machining and testing.

NOTE 6—Five sizes of specimens often used have diameters of approximately 0.505 in., 0.357 in., 0.252 in., 0.160 in., and 0.113 in., the reason being to permit easy calculations of stress from loads, since the corresponding cross sectional areas are equal or close to 0.200 in.$^2$, 0.100 in.$^2$, 0.0500 in.$^2$, 0.0200 in.$^2$, and 0.0100 in.$^2$, respectively. Thus, when the actual diameters agree with these values, the stresses (or strengths) may be computed using the simple multiplying factors 5, 10, 20, 50, and 100, respectively. (The metric equivalents of these fixed diameters do not result in correspondingly convenient cross sectional area and multiplying factors.)

**FIG. 4 Standard 0.500-in. (12.5 mm) Round Tension Test Specimen With 2-in. (50 mm) Gauge Length and Examples of Small-size Specimens Proportional to Standard Specimens**

measured at the center of the gauge length to the nearest 0.001 in. (0.025 mm) (see Table 1).

9.6 *General*—Test specimens shall be either substantially full size or machined, as prescribed in the product specifications for the material being tested.

9.6.1 It is desirable to have the cross-sectional area of the specimen smallest at the center of the gauge length to ensure fracture within the gauge length. This is provided for by the taper in the gauge length permitted for each of the specimens described in the following sections.

9.6.2 For brittle materials it is desirable to have fillets of large radius at the ends of the gauge length.

## 10. Plate-type Specimens

10.1 The standard plate-type test specimens are shown in Fig. 3. Such specimens are used for testing metallic materials in the form of plate, structural and bar-size shapes, and flat material having a nominal thickness of 3/16 in. (5 mm) or over. When product specifications so permit, other types of specimens may be used.

NOTE 4—When called for in the product specification, the 8-in. (200 mm) gauge length specimen of Fig. 3 may be used for sheet and strip material.

## 11. Sheet-type Specimen

11.1 The standard sheet-type test specimen is shown in Fig. 3. This specimen is used for testing metallic materials in the form of sheet, plate, flat wire, strip, band, and hoop ranging in nominal thickness from 0.005 in. to 1 in. (0.13 mm to 25 mm). When product specifications so permit, other types of specimens may be used, as provided in Section 10 (see Note 4).

## 12. Round Specimens

12.1 The standard 0.500-in. (12.5 mm) diameter round test specimen shown in Fig. 4 is frequently used for testing metallic materials.

12.2 Fig. 4 also shows small size specimens proportional to the standard specimen. These may be used when it is necessary to test material from which the standard specimen or specimens shown in Fig. 3 cannot be prepared. Other sizes of small round specimens may be used. In any such small size specimen it is important that the gauge length for measurement of elongation be four times the diameter of the specimen (see Note 4, Fig. 4).

AVA Documents
Document Sharing Hub



Full document details: ASTM A370-23

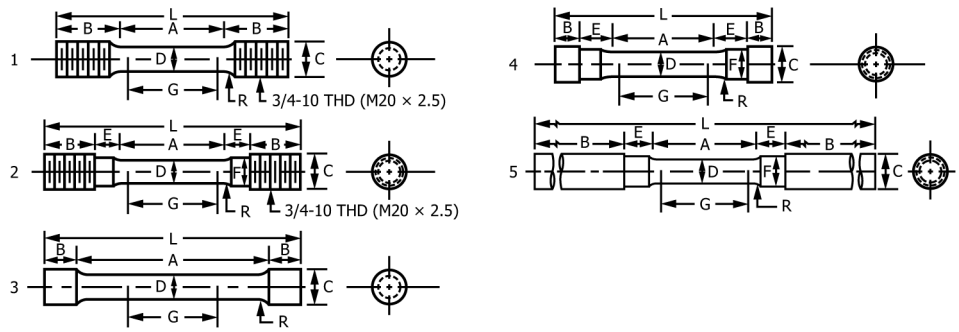


DIMENSIONS

| | Specimen 1 | | Specimen 2 | | Specimen 3 | | Specimen 4 | | Specimen 5 | |
|---|---|---|---|---|---|---|---|---|---|---|
| | in. | mm | in. | mm | in. | mm | in. | mm | in. | mm |
| *G*—Gauge length | 2.000± 0.005 | 50.0 ± 0.10 | 2.000± 0.005 | 50.0 ± 0.10 | 2.000± 0.005 | 50.0 ± 0.10 | 2.000± 0.005 | 50.0 ± 0.10 | 2.00± 0.005 | 50.0 ± 0.10 |
| *D*—Diameter (Note 1) | 0.500 ± 0.010 | 12.5± 0.25 | 0.500 ± 0.010 | 12.5± 0.25 | 0.500 ± 0.010 | 12.5± 0.25 | 0.500 ± 0.010 | 12.5± 0.25 | 0.500± 0.010 | 12.5 ± 0.25 |
| *R*—Radius of fillet, min | ⅜ | 10 | ⅜ | 10 | 1/16 | 2 | ⅜ | 10 | ⅜ | 10 |
| *A*—Length of reduced section | 2¼, min | 60, min | 2¼ , min | 60, min | 4, approximately | 100, approximately | 2¼ , min | 60, min | 2¼ , min | 60, min |
| *L*—Overall length, approximate | 5 | 125 | 5½ | 140 | 5½ | 140 | 4¾ | 120 | 9½ | 240 |
| *B*—Grip section (Note 2) | 1⅜ , approximately | 35, approximately | 1, approximately | 25, approximately | ¾ , approximately | 20, approximately | ½ , approximately | 13, approximately | 3, min | 75, min |
| *C*—Diameter of end section | ¾ | 20 | ¾ | 20 | 23/32 | 18 | ⅞ | 22 | ¾ | 20 |
| *E*—Length of shoulder and fillet section, approximate | . . . | . . . | ⅝ | 16 | . . . | . . . | ¾ | 20 | ⅝ | 16 |
| *F*—Diameter of shoulder | . . . | . . . | ⅝ | 16 | . . . | . . . | ⅝ | 16 | 19/32 | 15 |

NOTE 1—The reduced section may have a gradual taper from the ends toward the center with the ends not more than 0.005 in. (0.10 mm) larger in diameter than the center.

NOTE 2—On Specimen 5 it is desirable, if possible, to make the length of the grip section great enough to allow the specimen to extend into the grips a distance equal to two thirds or more of the length of the grips.

NOTE 3—The types of ends shown are applicable for the standard 0.500-in. round tension test specimen; similar types can be used for subsize specimens. The use of UNF series of threads (¾ by 16, ½ by 20, ⅜ by 24, and ¼ by 28) is suggested for high-strength brittle materials to avoid fracture in the thread portion.

**FIG. 5 Suggested Types of Ends for Standard Round Tension Test Specimens**

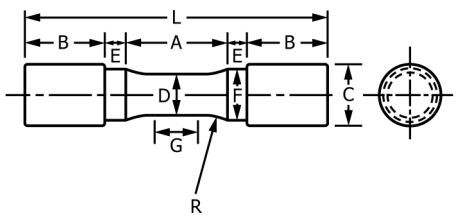


DIMENSIONS

| | Specimen 1 | | Specimen 2 | | Specimen 3 | |
|---|---|---|---|---|---|---|
| | in. | mm | in. | mm | in. | mm |
| *G*—Length of parallel | Shall be equal to or greater than diameter *D* | | | | | |
| *D*—Diameter | 0.500 ± 0.010 | 12.5± 0.25 | 0.750 ± 0.015 | 20.0 ± 0.40 | 1.25 ± 0.025 | 30.0 ± 0.60 |
| *R*—Radius of fillet, min | 1 | 25 | 1 | 25 | 2 | 50 |
| *A*—Length of reduced section, min | 1¼ | 32 | 1½ | 38 | 2¼ | 60 |
| *L*—Over-all length, min | 3¾ | 95 | 4 | 100 | 6⅜ | 160 |
| *B*—Grip section, approximate | 1 | 25 | 1 | 25 | 1¾ | 45 |
| *C*—Diameter of end section, approximate | ¾ | 20 | 1⅛ | 30 | 1⅞ | 48 |
| *E*—Length of shoulder, min | ¼ | 6 | ¼ | 6 | 5/16 | 8 |
| *F*—Diameter of shoulder | ⅝ ± 1/64 | 16.0 ± 0.40 | 15/16 ± 1/64 | 24.0 ± 0.40 | 1 7/16 ± 1/64 | 36.5 ± 0.40 |

NOTE 1—The reduced section and shoulders (dimensions *A, D, E, F, G,* and *R*) shall be shown, but the ends may be of any form to fit the holders of the testing machine in such a way that the load shall be axial. Commonly the ends are threaded and have the dimensions *B* and *C* given above.

**FIG. 6 Standard Tension Test Specimens for Cast Iron**

AVA Documents
Document Sharing Hub



Full document details: ASTM A370-23

**TABLE 1 Multiplying Factors to Be Used for Various Diameters of Round Test Specimens**

| Standard Specimen | | | Small Size Specimens Proportional to Standard | | | | | |
|---|---|---|---|---|---|---|---|---|
| 0.500 in. Round | | | 0.350 in. Round | | | 0.250 in. Round | | |
| Actual Diameter, in. | Area, in.$^2$ | Multiplying Factor | Actual Diameter, in. | Area, in.$^2$ | Multiplying Factor | Actual Diameter, in. | Area, in.$^2$ | Multiplying Factor |
| 0.490 | 0.1886 | 5.30 | 0.343 | 0.0924 | 10.82 | 0.245 | 0.0471 | 21.21 |
| 0.491 | 0.1893 | 5.28 | 0.344 | 0.0929 | 10.76 | 0.246 | 0.0475 | 21.04 |
| 0.492 | 0.1901 | 5.26 | 0.345 | 0.0935 | 10.70 | 0.247 | 0.0479 | 20.87 |
| 0.493 | 0.1909 | 5.24 | 0.346 | 0.0940 | 10.64 | 0.248 | 0.0483 | 20.70 |
| 0.494 | 0.1917 | 5.22 | 0.347 | 0.0946 | 10.57 | 0.249 | 0.0487 | 20.54 |
| 0.495 | 0.1924 | 5.20 | 0.348 | 0.0951 | 10.51 | 0.250 | 0.0491 | 20.37 |
| 0.496 | 0.1932 | 5.18 | 0.349 | 0.0957 | 10.45 | 0.251 | 0.0495 | 20.21 |
| | | | | | | | (0.05)[A] | (20.0)[A] |
| 0.497 | 0.1940 | 5.15 | 0.350 | 0.0962 | 10.39 | 0.252 | 0.0499 | 20.05 |
| | | | | | | | (0.05)[A] | (20.0)[A] |
| 0.498 | 0.1948 | 5.13 | 0.351 | 0.0968 | 10.33 | 0.253 | 0.0503 | 19.89 |
| | | | | | | | (0.05)[A] | (20.0)[A] |
| 0.499 | 0.1956 | 5.11 | 0.352 | 0.0973 | 10.28 | 0.254 | 0.0507 | 19.74 |
| 0.500 | 0.1963 | 5.09 | 0.353 | 0.0979 | 10.22 | 0.255 | 0.0511 | 19.58 |
| 0.501 | 0.1971 | 5.07 | 0.354 | 0.0984 | 10.16 | . . . | . . . | . . . |
| 0.502 | 0.1979 | 5.05 | 0.355 | 0.0990 | 10.10 | . . . | . . . | . . . |
| 0.503 | 0.1987 | 5.03 | 0.356 | 0.0995 | 10.05 | . . . | . . . | . . . |
| | | | | (0.1)[A] | (10.0)[A] | . . . | . . . | . . . |
| 0.504 | 0.1995 | 5.01 | 0.357 | 0.1001 | 9.99 | . . . | . . . | . . . |
| | (0.2)[A] | (5.0)[A] | | (0.1)[A] | (10.0)[A] | . . . | . . . | . . . |
| 0.505 | 0.2003 | 4.99 | . . . | . . . | . . . | . . . | . . . | . . . |
| | (0.2)[A] | (5.0)[A] | | | | | | |
| 0.506 | 0.2011 | 4.97 | . . . | . . . | . . . | . . . | . . . | . . . |
| | (0.2)[A] | (5.0)[A] | | | | | | |
| 0.507 | 0.2019 | 4.95 | . . . | . . . | . . . | . . . | . . . | . . . |
| 0.508 | 0.2027 | 4.93 | . . . | . . . | . . . | . . . | . . . | . . . |
| 0.509 | 0.2035 | 4.91 | . . . | . . . | . . . | . . . | . . . | . . . |
| 0.510 | 0.2043 | 4.90 | . . . | . . . | . . . | . . . | . . . | . . . |

[A] The values in parentheses may be used for ease in calculation of stresses, in pounds per square inch, as permitted in Note 5 of Fig. 4.

12.3 The type of specimen ends outside of the gauge length shall accommodate the shape of the product tested, and shall properly fit the holders or grips of the testing machine so that axial loads are applied with a minimum of load eccentricity and slippage. Fig. 5 shows specimens with various types of ends that have given satisfactory results.

## 13. Gauge Marks

13.1 The specimens shown in Figs. 3-6 shall be gauge marked with a center punch, scribe marks, multiple device, or drawn with ink. The purpose of these gauge marks is to determine the percent elongation. Punch marks shall be light, sharp, and accurately spaced. The localization of stress at the marks makes a hard specimen susceptible to starting fracture at the punch marks. The gauge marks for measuring elongation after fracture shall be made on the flat or on the edge of the flat tension test specimen and within the parallel section; for the 8-in. gauge length specimen, Fig. 3, one or more sets of 8-in. gauge marks may be used, intermediate marks within the gauge length being optional. Rectangular 2-in. gauge length specimens, Fig. 3, and round specimens, Fig. 4, are gauge marked with a double-pointed center punch or scribe marks. One or more sets of gauge marks may be used; however, one set must be approximately centered in the reduced section. These same precautions shall be observed when the test specimen is full section.

## 14. Determination of Tensile Properties

14.1 *Yield Point*—Yield point is the first stress in a material, less than the maximum obtainable stress, at which an increase in strain occurs without an increase in stress. Yield point is intended for application only for materials that may exhibit the unique characteristic of showing an increase in strain without an increase in stress. The stress-strain diagram is characterized by a sharp knee or discontinuity. Determine yield point by one of the following methods:

14.1.1 *Drop of Beam or Halt of Pointer Method*—In this method, apply an increasing load to the specimen at a uniform rate. When a lever and poise machine is used, keep the beam in balance by running out the poise at approximately a steady rate. When the yield point of the material is reached, the increase of the load will stop, but run the poise a trifle beyond the balance position, and the beam of the machine will drop for a brief but appreciable interval of time. When a machine equipped with a load-indicating dial is used there is a halt or hesitation of the load-indicating pointer corresponding to the

AVA Documents
Document Sharing Hub



Full document details: ASTM A370-23

drop of the beam. Note the load at the "drop of the beam" or the "halt of the pointer" and record the corresponding stress as the yield point.

14.1.2 *Autographic Diagram Method*—When a sharp-kneed stress-strain diagram is obtained by an autographic recording device, take the stress corresponding to the top of the knee (Fig. 7), or the stress at which the curve drops as the yield point.

14.1.3 *Total Extension Under Load Method*—When testing material for yield point and the test specimens may not exhibit a well-defined disproportionate deformation that characterizes a yield point as measured by the drop of the beam, halt of the pointer, or autographic diagram methods described in 14.1.1 and 14.1.2, a value equivalent to the yield point in its practical significance may be determined by the following method and may be recorded as yield point: Attach a Class C or better extensometer (Notes 5 and 6) to the specimen. When the load producing a specified extension (Note 7) is reached record the stress corresponding to the load as the yield point (Fig. 8).

NOTE 5—Automatic devices are available that determine the load at the specified total extension without plotting a stress-strain curve. Such devices may be used if their accuracy has been demonstrated. Multiplying calipers and other such devices are acceptable for use provided their accuracy has been demonstrated as equivalent to a Class C extensometer.

NOTE 6—Reference should be made to Practice E83.

NOTE 7—For steel with a yield point specified not over 80 000 psi (550 MPa), an appropriate value is 0.005 in./in. of gauge length. For values above 80 000 psi, this method is not valid unless the limiting total extension is increased.

NOTE 8—The shape of the initial portion of an autographically determined stress-strain (or a load-elongation) curve may be influenced by numerous factors such as the seating of the specimen in the grips, the straightening of a specimen bent due to residual stresses, and the rapid loading permitted in 8.4.1. Generally, the aberrations in this portion of the curve should be ignored when fitting a modulus line, such as that used to determine the extension-under-load yield, to the curve. In practice, for a number of reasons, the straight-line portion of the stress-strain curve may not go through the origin of the stress-strain diagram. In these cases it is not the origin of the stress-strain diagram, but rather where the straight-line portion of the stress-strain curve, intersects the strain axis that is pertinent. All offsets and extensions should be calculated from the intersection of the straight-line portion of the stress-strain curve with the strain axis, and not necessarily from the origin of the stress-strain diagram. See also Test Methods E8/E8M, Note 32.

14.2 *Yield Strength*—Yield strength is the stress at which a material exhibits a specified limiting deviation from the proportionality of stress to strain. The deviation is expressed in terms of strain, percent offset, total extension under load, and so forth. Determine yield strength by one of the following methods:

14.2.1 *Offset Method*—To determine the yield strength by the "offset method," it is necessary to secure data (autographic or numerical) from which a stress-strain diagram with a distinct modulus characteristic of the material being tested may be drawn. Then on the stress-strain diagram (Fig. 9) lay off *Om* equal to the specified value of the offset, draw *mn* parallel to *OA*, and thus locate *r*, the intersection of *mn* with the stress-strain curve corresponding to load *R*, which is the yield-strength load. In recording values of yield strength obtained by this method, the value of offset specified or used, or both, shall be stated in parentheses after the term yield strength, for example:

$$\text{Yield strength } (0.2\,\%\text{ offset}) = 52\,000 \text{ psi } (360 \text{ MPa}) \quad (1)$$

When the offset is 0.2 % or larger, the extensometer used shall qualify as a Class B2 device over a strain range of 0.05 % to 1.0 %. If a smaller offset is specified, it may be necessary to specify a more accurate device (that is, a Class B1 device) or reduce the lower limit of the strain range (for example, to 0.01 %) or both. See also Note 10 for automatic devices.

NOTE 9—For stress-strain diagrams not containing a distinct modulus, such as for some cold-worked materials, it is recommended that the extension under load method be utilized. If the offset method is used for materials without a distinct modulus, a modulus value appropriate for the material being tested should be used: 30 000 000 psi (207 000 MPa) for carbon steel; 29 000 000 psi (200 000 MPa) for ferritic stainless steel; 28 000 000 psi (193 000 MPa) for austenitic stainless steel. For special alloys, the producer should be contacted to discuss appropriate modulus values.

14.2.2 *Extension Under Load Method*—For tests to determine the acceptance or rejection of material whose stress-strain characteristics are well known from previous tests of similar material in which stress-strain diagrams were plotted, the total strain corresponding to the stress at which the specified offset (see Notes 10 and 11) occurs will be known within satisfactory limits. The stress on the specimen, when this total strain is reached, is the value of the yield strength. In recording values of yield strength obtained by this method, the value of "extension" specified or used, or both, shall be stated in parentheses after the term yield strength, for example:

$$\text{Yield strength } (0.5\,\%\ EUL) = 52\,000 \text{ psi } (360 \text{ MPa}) \quad (2)$$

The total strain can be obtained satisfactorily by use of a Class B1 extensometer (Note 5, Note 6, and Note 8).

NOTE 10—Automatic devices are available that determine offset yield strength without plotting a stress-strain curve. Such devices may be used if their accuracy has been demonstrated.

NOTE 11—The appropriate magnitude of the extension under load will obviously vary with the strength range of the particular steel under test. In general, the value of extension under load applicable to steel at any strength level may be determined from the sum of the proportional strain and the plastic strain expected at the specified yield strength. The following equation is used:

$$\text{Extension under load, in./in. of gauge length} = (YS/E) + r \quad (3)$$

where:

$YS$ = specified yield strength, psi or MPa,
$E$ = modulus of elasticity, psi or MPa, and
$r$ = limiting plastic strain, in./in.

14.3 *Tensile Strength*—Calculate the tensile strength by dividing the maximum load the specimen sustains during a tension test by the original cross-sectional area of the specimen. If the upper yield strength is the maximum stress recorded and if the stress-strain curve resembles that of Test Methods E8/E8M–15a Fig. 25, the maximum stress after discontinuous yielding shall be reported as the tensile strength unless otherwise stated by the purchaser.

14.4 *Elongation:*

14.4.1 Fit the ends of the fractured specimen together carefully and measure the distance between the gauge marks to the nearest 0.01 in. (0.25 mm) for gauge lengths of 2 in. and under, and to the nearest 0.5 % of the gauge length for gauge

AVA Documents
Document Sharing Hub



Full document details: ASTM A370-23

lengths over 2 in. A percentage scale reading to 0.5 % of the gauge length may be used. The elongation is the increase in length of the gauge length, expressed as a percentage of the original gauge length. In recording elongation values, give both the percentage increase and the original gauge length.

14.4.2 If any part of the fracture takes place outside of the middle half of the gauge length or in a punched or scribed mark within the reduced section, the elongation value obtained may not be representative of the material. If the elongation so measured meets the minimum requirements specified, no further testing is indicated, but if the elongation is less than the minimum requirements, discard the test and retest.

14.4.3 Automated tensile testing methods using extensometers allow for the measurement of elongation in a method described below. Elongation may be measured and reported either this way, or as in the method described above, fitting the broken ends together. Either result is valid.

14.4.4 Elongation at fracture is defined as the elongation measured just prior to the sudden decrease in force associated with fracture. For many ductile materials not exhibiting a sudden decrease in force, the elongation at fracture can be taken as the strain measured just prior to when the force falls below 10 % of the maximum force encountered during the test.

14.4.4.1 Elongation at fracture shall include elastic and plastic elongation and may be determined with autographic or automated methods using extensometers verified over the strain range of interest. Use a class B2 or better extensometer for materials having less than 5 % elongation; a class C or better extensometer for materials having elongation greater than or equal to 5 % but less than 50 %; and a class D or better extensometer for materials having 50 % or greater elongation. In all cases, the extensometer gauge length shall be the nominal gauge length required for the specimen being tested. Due to the lack of precision in fitting fractured ends together, the elongation after fracture using the manual methods of the preceding paragraphs may differ from the elongation at fracture determined with extensometers.

14.4.4.2 Percent elongation at fracture may be calculated directly from elongation at fracture data and be reported instead of percent elongation as calculated in 14.4.1. However, these two parameters are not interchangeable. Use of the elongation at fracture method generally provides more repeatable results.

14.5 *Reduction of Area*—Fit the ends of the fractured specimen together and measure the mean diameter or the width and thickness at the smallest cross section to the same accuracy as the original dimensions. The difference between the area thus found and the area of the original cross section expressed as a percentage of the original area is the reduction of area.

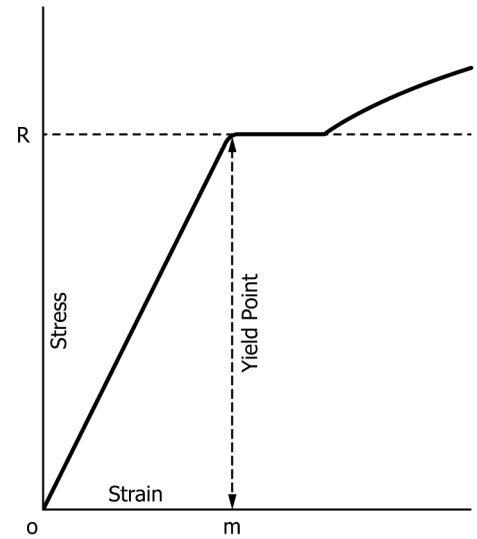


**FIG. 7 Stress-strain Diagram Showing Yield Point Corresponding With Top of Knee**

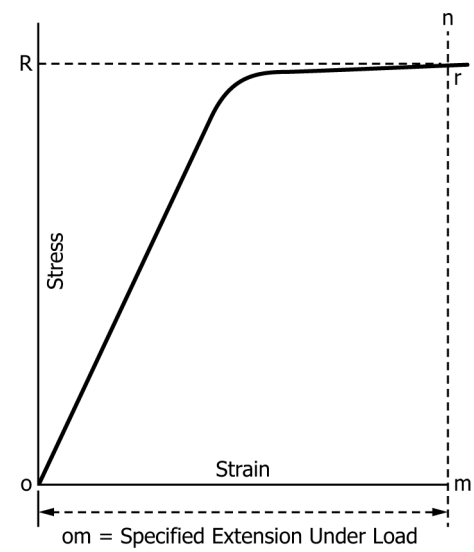


**FIG. 8 Stress-strain Diagram Showing Yield Point or Yield Strength by Extension Under Load Method**



Documents
Document Sharing Hub
Full document details: ASTM A370-23

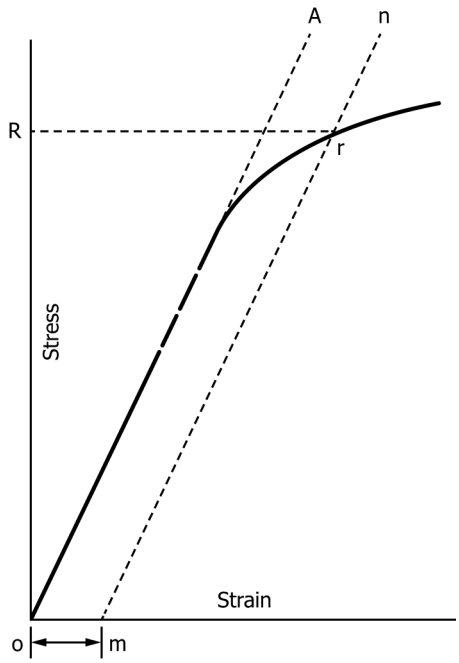


om = Specified Offset

**FIG. 9 Stress-strain Diagram for Determination of Yield Strength by Offset Method**

## BEND TEST

### 15. Description

15.1 The bend test is one method for evaluating ductility, but it cannot be considered as a quantitative means of predicting service performance in all bending operations. The severity of the bend test is primarily a function of the angle of bend of the inside diameter to which the specimen is bent, and of the cross section of the specimen. These conditions are varied according to location and orientation of the test specimen and the chemical composition, tensile properties, hardness, type, and quality of the steel specified. Test Methods E190 and E290 may be consulted for methods of performing the test.

15.2 Unless otherwise specified, it shall be permissible to age bend test specimens. The time-temperature cycle employed must be such that the effects of previous processing will not be materially changed. It may be accomplished by aging at room temperature 24 h to 48 h, or in shorter time at moderately elevated temperatures by boiling in water or by heating in oil or in an oven.

15.3 Bend the test specimen at room temperature to an inside diameter, as designated by the applicable product specifications, to the extent specified. The speed of bending is ordinarily not an important factor.

## HARDNESS TEST METHODS

### 16. General

16.1 A hardness test is a means of determining resistance to penetration and is occasionally employed to obtain a quick approximation of tensile strength. Tables 2-5 are for the conversion of hardness measurements from one scale to another or to approximate tensile strength. These conversion hardness numbers have been obtained using fixed-location hardness testing machines and computer-generated curves and are presented to the nearest 0.1 point to permit accurate reproduction of those curves. All converted hardness numbers must be considered approximate. All converted Rockwell and Vickers hardness numbers shall be rounded to the nearest whole number.

16.2 *Converted Hardness Numbers and Scales:*

16.2.1 If the product specification permits alternative hardness testing to determine conformance to a specified hardness requirement, the conversions listed in Tables 2-5 shall be used.

16.2.2 When reporting converted hardness numbers and scales from fixed-location hardness testing machine measurements, the measured hardness and test scale shall be indicated in parentheses, for example: 353 HBW (38 HRC). This means that a hardness number of 38 was obtained using the Rockwell C scale and converted to a Brinell hardness of 353.

16.2.3 When reporting converted hardness numbers from portable hardness testing machine measurements, the measured hardness and test scale shall be indicated in parentheses, as shown in the examples in Table 6.

### 17. Brinell Hardness Fixed-Location Testing

17.1 *Description:*

17.1.1 A specified load is applied to a flat surface of the specimen to be tested, through a tungsten carbide ball of specified diameter. The average diameter of the indentation is used as a basis for calculation of the Brinell hardness number. The quotient of the applied load divided by the area of the surface of the indentation, which is assumed to be spherical, is termed the Brinell hardness number (HBW) in accordance with the following equation:

$$HBW = P/\left[(\pi D/2)\left(D - \sqrt{D^2 - d^2}\right)\right] \quad (4)$$

where:

HBW = Brinell hardness number,
$P$ = applied load, kgf,
$D$ = diameter of the tungsten carbide ball, mm, and
$d$ = average diameter of the indentation, mm.

NOTE 12—The Brinell hardness number from a fixed-location testing machine is more conveniently secured from standard tables such as Table 7, which show numbers corresponding to the various indentation diameters, usually in increments of 0.05 mm.

NOTE 13—In Test Method E10 the values are stated in SI units, whereas in this section kg/m units are used.

17.1.2 The standard Brinell hardness fixed-location testing machine using a 10 mm tungsten carbide ball employs a 3000 kgf load for hard materials and a 1500 kgf or 500 kgf load for thin sections or soft materials (see Annex A2 on Steel Tubular Products). Other loads and different size indenters may be used when specified. In recording hardness values, the diameter of the ball and the load must be stated except when a 10 mm ball and 3000 kgf load are used.

17.1.3 A range of hardness can properly be specified only for quenched and tempered or normalized and tempered material. For annealed material a maximum hardness shall be

AVA Documents
Document Sharing Hub



Full document details: ASTM A370-23

**TABLE 2 Approximate Hardness Conversion Numbers for Nonaustenitic Steels[A] (Rockwell C to Other Hardness Numbers)**

| Rockwell C Scale, 150 kgf Load, Diamond Penetrator | Vickers Hardness Number | Brinell Hardness 3000 kgf Load, 10 mm Ball | Knoop Hardness, 500 gf Load and Over | Rockwell A Scale, 60 kgf Load, Diamond Penetrator | Rockwell Superficial Hardness | | | |
|---|---|---|---|---|---|---|---|---|
| | | | | | 15N Scale, 15 kgf Load, Diamond Penetrator | 30N Scale 30 kgf Load, Diamond Penetrator | 45N Scale, 45 kgf Load, Diamond Penetrator | Approximate Tensile Strength, ksi (MPa) |
| 68 | 940 | . . . | 920 | 85.6 | 93.2 | 84.4 | 75.4 | . . . |
| 67 | 900 | . . . | 895 | 85.0 | 92.9 | 83.6 | 74.2 | . . . |
| 66 | 865 | . . . | 870 | 84.5 | 92.5 | 82.8 | 73.3 | . . . |
| 65 | 832 | 739 | 846 | 83.9 | 92.2 | 81.9 | 72.0 | . . . |
| 64 | 800 | 722 | 822 | 83.4 | 91.8 | 81.1 | 71.0 | . . . |
| 63 | 772 | 706 | 799 | 82.8 | 91.4 | 80.1 | 69.9 | . . . |
| 62 | 746 | 688 | 776 | 82.3 | 91.1 | 79.3 | 68.8 | . . . |
| 61 | 720 | 670 | 754 | 81.8 | 90.7 | 78.4 | 67.7 | . . . |
| 60 | 697 | 654 | 732 | 81.2 | 90.2 | 77.5 | 66.6 | . . . |
| 59 | 674 | 634 | 710 | 80.7 | 89.8 | 76.6 | 65.5 | 351 (2420) |
| 58 | 653 | 615 | 690 | 80.1 | 89.3 | 75.7 | 64.3 | 338 (2330) |
| 57 | 633 | 595 | 670 | 79.6 | 88.9 | 74.8 | 63.2 | 325 (2240) |
| 56 | 613 | 577 | 650 | 79.0 | 88.3 | 73.9 | 62.0 | 313 (2160) |
| 55 | 595 | 560 | 630 | 78.5 | 87.9 | 73.0 | 60.9 | 301 (2070) |
| 54 | 577 | 543 | 612 | 78.0 | 87.4 | 72.0 | 59.8 | 292 (2010) |
| 53 | 560 | 525 | 594 | 77.4 | 86.9 | 71.2 | 58.6 | 283 (1950) |
| 52 | 544 | 512 | 576 | 76.8 | 86.4 | 70.2 | 57.4 | 273 (1880) |
| 51 | 528 | 496 | 558 | 76.3 | 85.9 | 69.4 | 56.1 | 264 (1820) |
| 50 | 513 | 482 | 542 | 75.9 | 85.5 | 68.5 | 55.0 | 255 (1760) |
| 49 | 498 | 468 | 526 | 75.2 | 85.0 | 67.6 | 53.8 | 246 (1700) |
| 48 | 484 | 455 | 510 | 74.7 | 84.5 | 66.7 | 52.5 | 238 (1640) |
| 47 | 471 | 442 | 495 | 74.1 | 83.9 | 65.8 | 51.4 | 229 (1580) |
| 46 | 458 | 432 | 480 | 73.6 | 83.5 | 64.8 | 50.3 | 221 (1520) |
| 45 | 446 | 421 | 466 | 73.1 | 83.0 | 64.0 | 49.0 | 215 (1480) |
| 44 | 434 | 409 | 452 | 72.5 | 82.5 | 63.1 | 47.8 | 208 (1430) |
| 43 | 423 | 400 | 438 | 72.0 | 82.0 | 62.2 | 46.7 | 201 (1390) |
| 42 | 412 | 390 | 426 | 71.5 | 81.5 | 61.3 | 45.5 | 194 (1340) |
| 41 | 402 | 381 | 414 | 70.9 | 80.9 | 60.4 | 44.3 | 188 (1300) |
| 40 | 392 | 371 | 402 | 70.4 | 80.4 | 59.5 | 43.1 | 182 (1250) |
| 39 | 382 | 362 | 391 | 69.9 | 79.9 | 58.6 | 41.9 | 177 (1220) |
| 38 | 372 | 353 | 380 | 69.4 | 79.4 | 57.7 | 40.8 | 171 (1180) |
| 37 | 363 | 344 | 370 | 68.9 | 78.8 | 56.8 | 39.6 | 166 (1140) |
| 36 | 354 | 336 | 360 | 68.4 | 78.3 | 55.9 | 38.4 | 161 (1110) |
| 35 | 345 | 327 | 351 | 67.9 | 77.7 | 55.0 | 37.2 | 156 (1080) |
| 34 | 336 | 319 | 342 | 67.4 | 77.2 | 54.2 | 36.1 | 152 (1050) |
| 33 | 327 | 311 | 334 | 66.8 | 76.6 | 53.3 | 34.9 | 149 (1030) |
| 32 | 318 | 301 | 326 | 66.3 | 76.1 | 52.1 | 33.7 | 146 (1010) |
| 31 | 310 | 294 | 318 | 65.8 | 75.6 | 51.3 | 32.5 | 141 (970) |
| 30 | 302 | 286 | 311 | 65.3 | 75.0 | 50.4 | 31.3 | 138 (950) |
| 29 | 294 | 279 | 304 | 64.6 | 74.5 | 49.5 | 30.1 | 135 (930) |
| 28 | 286 | 271 | 297 | 64.3 | 73.9 | 48.6 | 28.9 | 131 (900) |
| 27 | 279 | 264 | 290 | 63.8 | 73.3 | 47.7 | 27.8 | 128 (880) |
| 26 | 272 | 258 | 284 | 63.3 | 72.8 | 46.8 | 26.7 | 125 (860) |
| 25 | 266 | 253 | 278 | 62.8 | 72.2 | 45.9 | 25.5 | 123 (850) |
| 24 | 260 | 247 | 272 | 62.4 | 71.6 | 45.0 | 24.3 | 119 (820) |
| 23 | 254 | 243 | 266 | 62.0 | 71.0 | 44.0 | 23.1 | 117 (810) |
| 22 | 248 | 237 | 261 | 61.5 | 70.5 | 43.2 | 22.0 | 115 (790) |
| 21 | 243 | 231 | 256 | 61.0 | 69.9 | 42.3 | 20.7 | 112 (770) |
| 20 | 238 | 226 | 251 | 60.5 | 69.4 | 41.5 | 19.6 | 110 (760) |

[A] This table gives the approximate interrelationships of hardness numbers and approximate tensile strength of steels. It is possible that steels of various compositions and processing histories will deviate in hardness-tensile strength relationship from the data presented in this table. The data in this table should not be used for austenitic stainless steels, but have been shown to be applicable for ferritic and martensitic stainless steels. The data in this table should not be used to establish a relationship between hardness numbers and tensile strength of hard drawn wire. The data in this table was developed using fixed-location hardness testing machines. Where more precise conversions are required, they should be developed specially for each steel composition, heat treatment, and part. Caution should be exercised if conversions from this table are used for the acceptance or rejection of product. The approximate interrelationships may affect acceptance or rejection.

be specified. For normalized material a minimum or a maximum hardness may be specified by agreement. In general, no hardness requirements should be applied to untreated material.

17.1.4 Brinell hardness may be required when tensile properties are not specified.

17.2 *Apparatus*—Equipment shall meet the following requirements:

17.2.1 *Testing Machine*—A Brinell hardness fixed-location testing machine is acceptable for use over a loading range within which its load measuring device is accurate to ±1 %.

17.2.2 *Measuring Microscope*—The divisions of the micrometer scale of the microscope or other measuring devices used for the measurement of the diameter of the indentations

AVA Documents
Document Sharing Hub



Full document details: ASTM A370-23

**TABLE 3 Approximate Hardness Conversion Numbers for Nonaustenitic Steels[A] (Rockwell B to Other Hardness Numbers)**

| Rockwell B Scale, 100 kgf Load 1/16-in. (1.588 mm) Ball | Vickers Hardness Number | Brinell Hardness, 300 kgf Load, 10 mm Ball | Knoop Hardness, 500 gf Load & Over | Rockwell A Scale, 60 kgf Load, Diamond Penetrator | Rockwell F Scale, 60 kgf Load, 1/16-in. (1.588 mm) Ball | Rockwell Superficial Hardness | | | Approximate Tensile Strength ksi (MPa) |
|---|---|---|---|---|---|---|---|---|---|
| | | | | | | 15T Scale, 15 kgf Load, 1/16-in. (1.588 mm) Ball | 30T Scale, 30 kgf Load, 1/16-in. (1.588 mm) Ball | 45T Scale, 45 kgf Load, 1/16-in. (1.588 mm) Ball | |
| 100 | 240 | 240 | 251 | 61.5 | . . . | 93.1 | 83.1 | 72.9 | 116 (800) |
| 99 | 234 | 234 | 246 | 60.9 | . . . | 92.8 | 82.5 | 71.9 | 114 (785) |
| 98 | 228 | 228 | 241 | 60.2 | . . . | 92.5 | 81.8 | 70.9 | 109 (750) |
| 97 | 222 | 222 | 236 | 59.5 | . . . | 92.1 | 81.1 | 69.9 | 104 (715) |
| 96 | 216 | 216 | 231 | 58.9 | . . . | 91.8 | 80.4 | 68.9 | 102 (705) |
| 95 | 210 | 210 | 226 | 58.3 | . . . | 91.5 | 79.8 | 67.9 | 100 (690) |
| 94 | 205 | 205 | 221 | 57.6 | . . . | 91.2 | 79.1 | 66.9 | 98 (675) |
| 93 | 200 | 200 | 216 | 57.0 | . . . | 90.8 | 78.4 | 65.9 | 94 (650) |
| 92 | 195 | 195 | 211 | 56.4 | . . . | 90.5 | 77.8 | 64.8 | 92 (635) |
| 91 | 190 | 190 | 206 | 55.8 | . . . | 90.2 | 77.1 | 63.8 | 90 (620) |
| 90 | 185 | 185 | 201 | 55.2 | . . . | 89.9 | 76.4 | 62.8 | 89 (615) |
| 89 | 180 | 180 | 196 | 54.6 | . . . | 89.5 | 75.8 | 61.8 | 88 (605) |
| 88 | 176 | 176 | 192 | 54.0 | . . . | 89.2 | 75.1 | 60.8 | 86 (590) |
| 87 | 172 | 172 | 188 | 53.4 | . . . | 88.9 | 74.4 | 59.8 | 84 (580) |
| 86 | 169 | 169 | 184 | 52.8 | . . . | 88.6 | 73.8 | 58.8 | 83 (570) |
| 85 | 165 | 165 | 180 | 52.3 | . . . | 88.2 | 73.1 | 57.8 | 82 (565) |
| 84 | 162 | 162 | 176 | 51.7 | . . . | 87.9 | 72.4 | 56.8 | 81 (560) |
| 83 | 159 | 159 | 173 | 51.1 | . . . | 87.6 | 71.8 | 55.8 | 80 (550) |
| 82 | 156 | 156 | 170 | 50.6 | . . . | 87.3 | 71.1 | 54.8 | 77 (530) |
| 81 | 153 | 153 | 167 | 50.0 | . . . | 86.9 | 70.4 | 53.8 | 73 (505) |
| 80 | 150 | 150 | 164 | 49.5 | . . . | 86.6 | 69.7 | 52.8 | 72 (495) |
| 79 | 147 | 147 | 161 | 48.9 | . . . | 86.3 | 69.1 | 51.8 | 70 (485) |
| 78 | 144 | 144 | 158 | 48.4 | . . . | 86.0 | 68.4 | 50.8 | 69 (475) |
| 77 | 141 | 141 | 155 | 47.9 | . . . | 85.6 | 67.7 | 49.8 | 68 (470) |
| 76 | 139 | 139 | 152 | 47.3 | . . . | 85.3 | 67.1 | 48.8 | 67 (460) |
| 75 | 137 | 137 | 150 | 46.8 | 99.6 | 85.0 | 66.4 | 47.8 | 66 (455) |
| 74 | 135 | 135 | 147 | 46.3 | 99.1 | 84.7 | 65.7 | 46.8 | 65 (450) |
| 73 | 132 | 132 | 145 | 45.8 | 98.5 | 84.3 | 65.1 | 45.8 | 64 (440) |
| 72 | 130 | 130 | 143 | 45.3 | 98.0 | 84.0 | 64.4 | 44.8 | 63 (435) |
| 71 | 127 | 127 | 141 | 44.8 | 97.4 | 83.7 | 63.7 | 43.8 | 62 (425) |
| 70 | 125 | 125 | 139 | 44.3 | 96.8 | 83.4 | 63.1 | 42.8 | 61 (420) |
| 69 | 123 | 123 | 137 | 43.8 | 96.2 | 83.0 | 62.4 | 41.8 | 60 (415) |
| 68 | 121 | 121 | 135 | 43.3 | 95.6 | 82.7 | 61.7 | 40.8 | 59 (405) |
| 67 | 119 | 119 | 133 | 42.8 | 95.1 | 82.4 | 61.0 | 39.8 | 58 (400) |
| 66 | 117 | 117 | 131 | 42.3 | 94.5 | 82.1 | 60.4 | 38.7 | 57 (395) |
| 65 | 116 | 116 | 129 | 41.8 | 93.9 | 81.8 | 59.7 | 37.7 | 56 (385) |
| 64 | 114 | 114 | 127 | 41.4 | 93.4 | 81.4 | 59.0 | 36.7 | . . . |
| 63 | 112 | 112 | 125 | 40.9 | 92.8 | 81.1 | 58.4 | 35.7 | . . . |
| 62 | 110 | 110 | 124 | 40.4 | 92.2 | 80.8 | 57.7 | 34.7 | . . . |
| 61 | 108 | 108 | 122 | 40.0 | 91.7 | 80.5 | 57.0 | 33.7 | . . . |
| 60 | 107 | 107 | 120 | 39.5 | 91.1 | 80.1 | 56.4 | 32.7 | . . . |
| 59 | 106 | 106 | 118 | 39.0 | 90.5 | 79.8 | 55.7 | 31.7 | . . . |
| 58 | 104 | 104 | 117 | 38.6 | 90.0 | 79.5 | 55.0 | 30.7 | . . . |
| 57 | 103 | 103 | 115 | 38.1 | 89.4 | 79.2 | 54.4 | 29.7 | . . . |
| 56 | 101 | 101 | 114 | 37.7 | 88.8 | 78.8 | 53.7 | 28.7 | . . . |
| 55 | 100 | 100 | 112 | 37.2 | 88.2 | 78.5 | 53.0 | 27.7 | . . . |
| 54 | . . . | . . . | 111 | 36.8 | 87.7 | 78.2 | 52.4 | 26.7 | . . . |
| 53 | . . . | . . . | 110 | 36.3 | 87.1 | 77.9 | 51.7 | 25.7 | . . . |
| 52 | . . . | . . . | 109 | 35.9 | 86.5 | 77.5 | 51.0 | 24.7 | . . . |
| 51 | . . . | . . . | 108 | 35.5 | 86.0 | 77.2 | 50.3 | 23.7 | . . . |
| 50 | . . . | . . . | 107 | 35.0 | 85.4 | 76.9 | 49.7 | 22.7 | . . . |
| 49 | . . . | . . . | 106 | 34.6 | 84.8 | 76.6 | 49.0 | 21.7 | . . . |
| 48 | . . . | . . . | 105 | 34.1 | 84.3 | 76.2 | 48.3 | 20.7 | . . . |
| 47 | . . . | . . . | 104 | 33.7 | 83.7 | 75.9 | 47.7 | 19.7 | . . . |
| 46 | . . . | . . . | 103 | 33.3 | 83.1 | 75.6 | 47.0 | 18.7 | . . . |
| 45 | . . . | . . . | 102 | 32.9 | 82.6 | 75.3 | 46.3 | 17.7 | . . . |
| 44 | . . . | . . . | 101 | 32.4 | 82.0 | 74.9 | 45.7 | 16.7 | . . . |
| 43 | . . . | . . . | 100 | 32.0 | 81.4 | 74.6 | 45.0 | 15.7 | . . . |
| 42 | . . . | . . . | 99 | 31.6 | 80.8 | 74.3 | 44.3 | 14.7 | . . . |
| 41 | . . . | . . . | 98 | 31.2 | 80.3 | 74.0 | 43.7 | 13.6 | . . . |
| 40 | . . . | . . . | 97 | 30.7 | 79.7 | 73.6 | 43.0 | 12.6 | . . . |
| 39 | . . . | . . . | 96 | 30.3 | 79.1 | 73.3 | 42.3 | 11.6 | . . . |
| 38 | . . . | . . . | 95 | 29.9 | 78.6 | 73.0 | 41.6 | 10.6 | . . . |
| 37 | . . . | . . . | 94 | 29.5 | 78.0 | 72.7 | 41.0 | 9.6 | . . . |
| 36 | . . . | . . . | 93 | 29.1 | 77.4 | 72.3 | 40.3 | 8.6 | . . . |
| 35 | . . . | . . . | 92 | 28.7 | 76.9 | 72.0 | 39.6 | 7.6 | . . . |
| 34 | . . . | . . . | 91 | 28.2 | 76.3 | 71.7 | 39.0 | 6.6 | . . . |
| 33 | . . . | . . . | 90 | 27.8 | 75.7 | 71.4 | 38.3 | 5.6 | . . . |
| 32 | . . . | . . . | 89 | 27.4 | 75.2 | 71.0 | 37.6 | 4.6 | . . . |

Documents
Document Sharing Hub



Full document details: ASTM A370-23

**TABLE 3** *Continued*

| Rockwell B Scale, 100 kgf Load 1/16-in. (1.588 mm) Ball | Vickers Hardness Number | Brinell Hardness, 300 kgf Load, 10 mm Ball | Knoop Hardness, 500 gf Load & Over | Rockwell A Scale, 60 kgf Load, Diamond Penetrator | Rockwell F Scale, 60 kgf Load, 1/16-in. (1.588 mm) Ball | Rockwell Superficial Hardness | | | Approximate Tensile Strength ksi (MPa) |
|---|---|---|---|---|---|---|---|---|---|
| | | | | | | 15T Scale, 15 kgf Load, 1/16-in. (1.588 mm) Ball | 30T Scale, 30 kgf Load, 1/16-in. (1.588 mm) Ball | 45T Scale, 45 kgf Load, 1/16-in. (1.588 mm) Ball | |
| 31 | . . . | . . . | 88 | 27.0 | 74.6 | 70.7 | 37.0 | 3.6 | . . . |
| 30 | . . . | . . . | 87 | 26.6 | 74.0 | 70.4 | 36.3 | 2.6 | . . . |

[A] This table gives the approximate interrelationships of hardness numbers and approximate tensile strength of steels. It is possible that steels of various compositions and processing histories will deviate in hardness-tensile strength relationship from the data presented in this table. The data in this table should not be used for austenitic stainless steels, but have been shown to be applicable for ferritic and martensitic stainless steels. The data in this table should not be used to establish a relationship between hardness numbers and tensile strength of hard drawn wire. The data in this table was developed using fixed-location hardness testing machines. Where more precise conversions are required, they should be developed specially for each steel composition, heat treatment, and part.

**TABLE 4 Approximate Hardness Conversion Numbers for Austenitic Steels (Rockwell C to other Hardness Numbers)**

| Rockwell C Scale, 150 kgf Load, Diamond Penetrator | Rockwell A Scale, 60 kgf Load, Diamond Penetrator | Rockwell Superficial Hardness | | |
|---|---|---|---|---|
| | | 15N Scale, 15 kgf Load, Diamond Penetrator | 30N Scale, 30 kgf Load, Diamond Penetrator | 45N Scale, 45 kgf Load, Diamond Penetrator |
| 48 | 74.4 | 84.1 | 66.2 | 52.1 |
| 47 | 73.9 | 83.6 | 65.3 | 50.9 |
| 46 | 73.4 | 83.1 | 64.5 | 49.8 |
| 45 | 72.9 | 82.6 | 63.6 | 48.7 |
| 44 | 72.4 | 82.1 | 62.7 | 47.5 |
| 43 | 71.9 | 81.6 | 61.8 | 46.4 |
| 42 | 71.4 | 81.0 | 61.0 | 45.2 |
| 41 | 70.9 | 80.5 | 60.1 | 44.1 |
| 40 | 70.4 | 80.0 | 59.2 | 43.0 |
| 39 | 69.9 | 79.5 | 58.4 | 41.8 |
| 38 | 69.3 | 79.0 | 57.5 | 40.7 |
| 37 | 68.8 | 78.5 | 56.6 | 39.6 |
| 36 | 68.3 | 78.0 | 55.7 | 38.4 |
| 35 | 67.8 | 77.5 | 54.9 | 37.3 |
| 34 | 67.3 | 77.0 | 54.0 | 36.1 |
| 33 | 66.8 | 76.5 | 53.1 | 35.0 |
| 32 | 66.3 | 75.9 | 52.3 | 33.9 |
| 31 | 65.8 | 75.4 | 51.4 | 32.7 |
| 30 | 65.3 | 74.9 | 50.5 | 31.6 |
| 29 | 64.8 | 74.4 | 49.6 | 30.4 |
| 28 | 64.3 | 73.9 | 48.8 | 29.3 |
| 27 | 63.8 | 73.4 | 47.9 | 28.2 |
| 26 | 63.3 | 72.9 | 47.0 | 27.0 |
| 25 | 62.8 | 72.4 | 46.2 | 25.9 |
| 24 | 62.3 | 71.9 | 45.3 | 24.8 |
| 23 | 61.8 | 71.3 | 44.4 | 23.6 |
| 22 | 61.3 | 70.8 | 43.5 | 22.5 |
| 21 | 60.8 | 70.3 | 42.7 | 21.3 |
| 20 | 60.3 | 69.8 | 41.8 | 20.2 |

shall be such as to permit the direct measurement of the diameter to 0.1 mm and the estimation of the diameter to 0.05 mm.

NOTE 14—This requirement applies to the construction of the microscope only and is not a requirement for measurement of the indentation, see 17.4.4.

17.2.3 *Standard Ball*—The standard tungsten carbide ball for Brinell hardness fixed-location testing machine is 10 mm (0.3937 in.) in diameter with a deviation from this value of not more than 0.005 mm (0.0002 in.) in any diameter. A tungsten carbide ball suitable for use must not show a permanent change in diameter greater than 0.01 mm (0.0004 in.) when pressed with a force of 3000 kgf against the test specimen. Steel ball indenters are no longer permitted for use in Brinell hardness fixed-location testing machines in accordance with these test methods.

17.3 *Test Specimen*—Brinell hardness indentations are made on prepared areas and sufficient metal must be removed from the surface to eliminate decarburized metal and other surface irregularities. The thickness of the piece tested must be such that no bulge or other marking showing the effect of the load appears on the side of the piece opposite the indentation.

17.4 *Test Procedure:*

17.4.1 *Detailed Test Procedure*—For detailed requirements of the test procedure, reference shall be made to the latest revision of Test Method E10 for fixed-location hardness testing machines.

17.4.2 It is essential that the applicable product specifications state clearly the position at which Brinell hardness indentations are to be made and the number of such indentations required. The distance of the center of the indentation

AVA Documents
Document Sharing Hub



Full document details: ASTM A370-23

**TABLE 5 Approximate Hardness Conversion Numbers for Austenitic Steels (Rockwell B to other Hardness Numbers)**

| Rockwell B Scale, 100 kgf Load, 1/16-in. (1.588 mm) Ball | Brinell Indentation Diameter, mm | Brinell Hardness, 3000 kgf Load, 10 mm Ball | Rockwell A Scale, 60 kgf Load, Diamond Penetrator | Rockwell Superficial Hardness | | |
|---|---|---|---|---|---|---|
| | | | | 15T Scale, 15 kgf Load, 1/16-in. (1.588 mm) Ball | 30T Scale, 30 kgf Load, 1/16-in. (1.588 mm) Ball | 45T Scale, 45 kgf Load, 1/16-in. (1.588 mm) Ball |
| 100 | 3.79 | 256 | 61.5 | 91.5 | 80.4 | 70.2 |
| 99 | 3.85 | 248 | 60.9 | 91.2 | 79.7 | 69.2 |
| 98 | 3.91 | 240 | 60.3 | 90.8 | 79.0 | 68.2 |
| 97 | 3.96 | 233 | 59.7 | 90.4 | 78.3 | 67.2 |
| 96 | 4.02 | 226 | 59.1 | 90.1 | 77.7 | 66.1 |
| 95 | 4.08 | 219 | 58.5 | 89.7 | 77.0 | 65.1 |
| 94 | 4.14 | 213 | 58.0 | 89.3 | 76.3 | 64.1 |
| 93 | 4.20 | 207 | 57.4 | 88.9 | 75.6 | 63.1 |
| 92 | 4.24 | 202 | 56.8 | 88.6 | 74.9 | 62.1 |
| 91 | 4.30 | 197 | 56.2 | 88.2 | 74.2 | 61.1 |
| 90 | 4.35 | 192 | 55.6 | 87.8 | 73.5 | 60.1 |
| 89 | 4.40 | 187 | 55.0 | 87.5 | 72.8 | 59.0 |
| 88 | 4.45 | 183 | 54.5 | 87.1 | 72.1 | 58.0 |
| 87 | 4.51 | 178 | 53.9 | 86.7 | 71.4 | 57.0 |
| 86 | 4.55 | 174 | 53.3 | 86.4 | 70.7 | 56.0 |
| 85 | 4.60 | 170 | 52.7 | 86.0 | 70.0 | 55.0 |
| 84 | 4.65 | 167 | 52.1 | 85.6 | 69.3 | 54.0 |
| 83 | 4.70 | 163 | 51.5 | 85.2 | 68.6 | 52.9 |
| 82 | 4.74 | 160 | 50.9 | 84.9 | 67.9 | 51.9 |
| 81 | 4.79 | 156 | 50.4 | 84.5 | 67.2 | 50.9 |
| 80 | 4.84 | 153 | 49.8 | 84.1 | 66.5 | 49.9 |

**TABLE 6 Reporting Converted Hardness Numbers and Scales from Portable Hardness Tests**

NOTE 1—Since the data in the hardness conversion tables in this standard were developed using fixed-location hardness testing machines, the use of these tables to convert portable hardness testing numbers may have a larger approximation range than for converting fixed-location hardness testing numbers.

| Portable Hardness Test Method | Portable Hardness Test Number and Scale | Converted Hardness Number and Scale | Reported Converted Hardness Number and Scale |
|---|---|---|---|
| A833 | 353 HBC/340 | 38 HRC | 38 HRC (353 HBC/340) |
| A956/A956M | 353 HB (HLD) | 38 HRC | 38 HRC (353 HB (HLD)) |
| A1038 | 372 HV (UCI) | 38 HRC | 38 HRC (372 HV (UCI)) |
| E110 | 353 HBW/P | 38 HRC | 38 HRC (353 HBW/P) |

from the edge of the specimen or edge of another indentation must be at least two and one-half times the diameter of the indentation.

17.4.3 Apply the load for 10 s to 15 s.

17.4.4 Measure diameters of the indentation in accordance with Test Method E10.

17.4.5 The Brinell hardness fixed-location testing machine is not recommended for materials above 650 HBW.

17.4.5.1 If a ball is used in a test of a specimen which shows a Brinell hardness number greater than the limit for the ball as detailed in 17.4.5, the ball shall be either discarded and replaced with a new ball or remeasured to ensure conformance with the requirements of Test Method E10.

17.5 *Reporting Brinell Hardness Numbers:*

17.5.1 Brinell hardness numbers shall not be reported by a number alone because it is necessary to indicate which indenter and force has been employed in making the test. Reported Brinell hardness numbers shall always be followed by the scale symbol HBW, and be supplemented by an index indicating the test conditions in the following order:

17.5.1.1 Diameter of the ball, mm,

17.5.1.2 A value representing the applied load, kgf, and,

17.5.1.3 The applied force dwell time, s, if other than 10 s to 15 s.

17.5.1.4 The only exception to the above requirement is for the HBW 10/3000 scale when a 10 s to 15 s dwell time is used. Only in the case of this one Brinell hardness scale may the designation be reported simply as HBW.

17.5.1.5 *Examples:* 220 HBW = Brinell hardness of 220 determined with a ball of 10 mm diameter and with a test force of 3000 kgf applied for 10 s to 15 s; 350 HBW 5/1500 = Brinell hardness of 350 determined with a ball of 5 mm diameter and with a test force of 1500 kgf applied for 10 s to 15 s.

## 18. Rockwell Fixed-Location Hardness Testing

18.1 *Description:*

18.1.1 In this test a hardness number is obtained by determining the depth of penetration of a diamond point or a tungsten carbide ball into the specimen using a fixed-location hardness testing machine. A minor load of 10 kgf is first applied which causes an initial penetration, sets the penetrator on the material and holds it in position. A major load which depends on the scale being used is applied increasing the depth of indentation. The major load is removed and, with the minor load still acting, the Rockwell number, which is proportional to the difference in penetration between the major and minor loads is determined; this is usually done by the machine and shows on a dial, digital display, printer, or other device. This is

AVA Documents
Document Sharing Hub



Full document details: ASTM A370-23