NOTICE: This standard has either been superseded and replaced by a new version or withdrawn.
Please contact ASTM International (www.astm.org) for the latest information.

Designation: A 796/A 796M – 04

Standard Practice for Structural Design of Corrugated Steel Pipe, Pipe-Arches, and Arches for Storm and Sanitary Sewers and Other Buried Applications[1]

This standard is issued under the fixed designation A 796/A 796M; the number immediately following the designation indicates the year of original adoption or, in the case of revision, the year of last revision. A number in parentheses indicates the year of last reapproval. A superscript epsilon (ϵ) indicates an editorial change since the last revision or reapproval.

1. Scope*

1.1 This practice covers the structural design of corrugated steel pipe and pipe-arches, ribbed and composite ribbed steel pipe, closed rib steel pipe, and steel structural plate pipe, pipe-arches, and underpasses for use as storm sewers and sanitary sewers, and other buried applications. Ribbed and composite ribbed steel pipe, and closed rib steel pipe, shall be of helical fabrication having a continuous lockseam. This practice is for pipe installed in a trench or embankment and subjected to earth loads and live loads. It must be recognized that a buried corrugated steel pipe is a composite structure made up of the steel ring and the soil envelope, and both elements play a vital part in the structural design of this type of structure. This practice applies to structures installed in accordance with Practice A 798/A 798MA 798/A 798M or A 807/A 807M.A 807/A 807M

1.2 Corrugated steel pipe and pipe-arches shall be of annular fabrication using riveted or spot-welded seams, or of helical fabrication having a continuous lockseam or welded seam.

1.3 Structural plate pipe, pipe-arches, underpasses, and arches are fabricated in separate plates that, when assembled at the job site by bolting, form the required shape.

1.4 This specification is applicable to design in inch-pound units as A 796 or in SI units as A 796M. Inch-pound units and SI units are not necessarily equivalent. SI units are shown in brackets in the text for clarity, but they are the applicable values when the design is done per A 796M.

1.5 *This standard does not purport to address all of the safety concerns, if any, associated with its use. It is the responsibility of the user of this standard to establish appropriate safety and health practices and determine the applicability of regulatory limitations prior to use.*

2. Referenced Documents

2.1 *ASTM Standards:*

A 760/A 760M Specification for Corrugated Steel Pipe, Metallic-Coated for Sewers and Drains[2]

A 761/A 761M Specification for Corrugated Steel Structural Plate, Zinc-Coated, for Field-Bolted Pipe, Pipe-Arches, and Arches[2]

A 762/A 762M Specification for Corrugated Steel Pipe, Polymer Precoated for Sewers and Drains[2]

A 798/A 798M Practice for Installing Factory-Made Corrugated Steel Pipe for Sewers and Other Applications[2]

A 807/A 807M Practice for Installing Corrugated Steel Structural Plate Pipe for Sewers and Other Applications[2]

A 902 Terminology Relating to Metallic-Coated Steel Products[2]

A 978/A 978M Specification for Composite Ribbed Steel Pipe, Precoated and Polyethylene-Lined for Gravity Flow Sanitary Sewers, Storm Sewers, and Other Special Applications[2]

A 1019/A 1019M Specification for Closed Rib Steel Pipe with a Diameter of 36 in. [900 mm] or Less, Polymer Precoated for Sewers and Drains[2]

D 698 Test Method for Laboratory Compaction Characteristics of Soil Using Standard Effort (12 400 ft-lbf/ft^3[600 kN·m/m^3])[3]

D 1556 Test Method for Density and Unit Weight of Soil in Place by the Sand-Cone Method[3]

D 2167 Test Method for Density and Unit Weight of Soil in Place by the Rubber Balloon Method[3]

D 2487 Classification of Soils for Engineering Purposes (Unified Soil Classification System)[3]

D 2922 Test Methods for Density of Soil and Soil-Aggregate in Place by Nuclear Methods (Shallow Depth)[3]

D 2937 Test Method for Density of Soil in Place by the Drive-Cylinder Method[3]

2.2 *AASHTO Standard:*

Standard Specifications for Highway Bridges [4]

2.3 *FAA Standard:*

AC No. 150/5320–5B Advisory Circular, "Airport Drainage," Department of Transportation, Federal Aviation

[1] This practice is under the jurisdiction of ASTM Committee A05 on Metallic-Coated Iron and Steel Products and is the direct responsibility of Subcommittee A05.17 on Corrugated Steel Pipe Specifications.

Current edition approved May 1, 2004. Published June 2004. Originally approved in 1982. Last previous edition approved in 2003 as A 796/A 796M – 03.

[2] *Annual Book of ASTM Standards*, Vol 01.06.

[3] *Annual Book of ASTM Standard*, Vol 04.08.

[4] Available from American Association of State Highway and Transportation Officials, 444 North Capitol St., N.W., Suite 225, Washington DC, 20001.

*A Summary of Changes section appears at the end of this standard.

Copyright © ASTM International, 100 Barr Harbor Drive, PO Box C700, West Conshohocken, PA 19428-2959, United States.

Documents
Document Sharing Hub
Full document details: ASTM A796/A796M-04

NOTICE: This standard has either been superseded and replaced by a new version or withdrawn.
Please contact ASTM International (www.astm.org) for the latest information.

Administration, 1970[5]

3. Terminology

3.1 *General Definitions*—For definitions of general terms used in this practice, refer to Terminology A 902. For definitions of terms specific to this standard, refer to 3.2.

3.2 *Definitions of Terms Specific to This Standard:*

3.2.1 *bedding*, *n*—the earth or other material on which the pipe is laid, consisting of a thin layer of imported material on top of the in situ foundation.

3.2.2 *haunch*, *n*—the portion of the pipe cross section between the maximum horizontal dimension and the top of the bedding.

3.2.3 *invert*, *n*—the lowest portion of the pipe cross section; also, the bottom portion of the pipe.

3.2.4 *pipe*, *n*—a conduit having a full circular shape, or in a general context, all structure shapes covered by this practice.

3.2.5 *pipe-arch*, *n*—a pipe shape consisting of an approximate semi-circular top portion, small radius corners, and large radius invert.

3.2.6 *arch*, *n*—a pipe shape that is supported on footings and does not have a full metal invert.

4. Symbols

4.1 The symbols used in this practice have the following significance:

A = required wall area, in.^{2}/ft [mm^2/mm]
(AL) = maximum highway design axle load, lbf [N]
C_l = longitudinal live load distribution factor for pipe arches
d = depth of corrugation, in. [mm]
E = modulus of elasticity = 29 by 10^6 lbf/in.^{2} [200 by 10^3 MPa]
(EL) = earth load, lbf/ft^2 [kPa]
(FF) = flexibility factor, in./lbf [mm/N]
f_y = specified minimum yield strength

For 6 by 2–in. [150 by 50–mm] corrugation
Type 33 = 33 000 lbf/in.^{2}[225 MPa]
Type 38 = 38 000 lbf/in.^{2}[260 MPa]
For 15 by 5½ –in. [380 by 140–mm] and 16 by 6–in. [400 by 150–mm] corrugations = 44 000 lbf/in.^{2}[300 MPa]
For all other corrugations = 33 000 lbf/in.^{2}[225 MPa]

f_u = specified minimum tensile strength

For 6 by 2–in. [150 by 50–mm] corrugation
Type 33 = 45 000 lbf/in.^{2}[310 MPa]
Type 38 = 48 000 lbf/in.^{2}[330 MPa]
For 15 by 15½ –in. [380 by 140–mm] and 16 by 6–in. [400 by 150–mm] corrugations = 55 000 lbf/in.^{2}[380 MPa]
For all other corrugations = 45 000 lbf/in.^{2}[310 MPa]

f_c = critical buckling stress, lbf/in.^{2} [MPa]
h = height of cover, in. [mm] determined as follows: *(1)* highways—from top of pipe to top of rigid pavement, or to top of subgrade for flexible pavement; *(2)* railways—top of pipe to bottom of tie
H = depth of fill above top of pipe, ft [m]
H_{min} = minimum depth of fill, ft [m]
H_{max} = maximum depth of fill, ft [m]
I = moment of inertia of corrugated shape, in.^{4}/in. [mm^4/mm] (see Tables 1-28)
(IL) = pressure from impact load, lbf/ft^2 [kPa]
k = soil stiffness factor = 0.22 for good side-fill material compacted to 90 % of standard density based on Test Method D 698D 698
L_1, L_2, L_3 = loaded lengths, in. [mm] defined in 17.3
(LL) = pressure from live load, lbf/ft^2 [kPa]
P = total design load or pressure, lbf/ft^2 [kPa]
P_c = corner pressure, lbf/ft^2 [kPa]
P_f = factored crown pressure, lbf/ft^2 [kPa]
r = radius of gyration of corrugation, in. [mm] (see Tables 1-28)
r_c = corner radius of pipe-arch, in. [mm]
R_n = nominal resistance for each limit state, lbf/ft [kN/m]
R_f = factored resistance for each limit state, lbf/ft [kN/m]
r_l = radius at crown, in. [mm]
S = pipe diameter or span, ft [m]
s = pipe diameter or span, in. [mm]
(SF) = safety factor
(SS) = required seam strength, lbf/ft [kN/m]
T = thrust in pipe wall, lbf/ft [kN/m]
T_f = factored thrust in pipe wall, lbf/ft [kN/m]
w = unit force derived from 1 ft^3 [1 m^3] of fill material above the pipe, lbf/ft^3 [kN/m^3]. When actual fill material is not known, use 120 lbf/ft^3 [19 kN/m^3]
φ = resistance factor

5. Basis of Design

5.1 The safety factors and other specific quantitative recommendations herein represent generally accepted design practice. The design engineer should, however, determine that these recommendations meet particular project needs.

5.2 This practice is not applicable for long-span structural plate pipe or other multi-radius shapes not described herein. Such structures require additional design considerations for both the pipe and the soil envelope. In addition to meeting all other design requirements given herein, the maximum diameters or spans for structures designed by this practice are as follows:

[5] Available from Superintendent of Documents, U.S. Government Printing Office, Washington, DC 20402. Publication No. SN-050-007-00149-5.

Documents
Document Sharing Hub
Full document details: ASTM A796/A796M-04

NOTICE: This standard has either been superseded and replaced by a new version or withdrawn.
Please contact ASTM International (www.astm.org) for the latest information.

TABLE 1 Sectional Properties of Corrugated Steel Sheets for Corrugation: 1½ by ¼ in. (Helical)

NOTE 1—Dimensions shown in the figure are exact values used in calculating the section properties. Nominal values, for some of these dimensions, are used in other places in this practice.

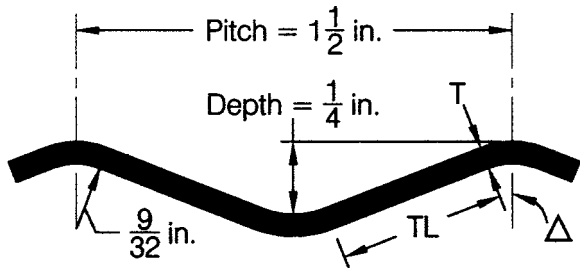

Specified Thickness, in.	Area of Section, A, in.²/ft	Tangent Length, TL, in.	Tangent Angle, Δ,°	Moment of Inertia, I × 10⁻³ in.⁴/in.	Radius of Gyration, r, in.
0.040[A]	0.456	0.571	21.44	0.253	0.0816
0.052	0.608	0.566	21.52	0.343	0.0824
0.064	0.761	0.560	21.61	0.439	0.0832
0.079	0.950	0.554	21.71	0.566	0.0846

[A]This thickness should only be used for the inner liner of double-wall type IA pipe, or for temporary pipe. When used for other than temporary pipe, it should be polymer coated.

TABLE 2 Sectional Properties of Corrugated Steel Sheets for Corrugation: 38 by 6.5 mm (Helical) [SI Units]

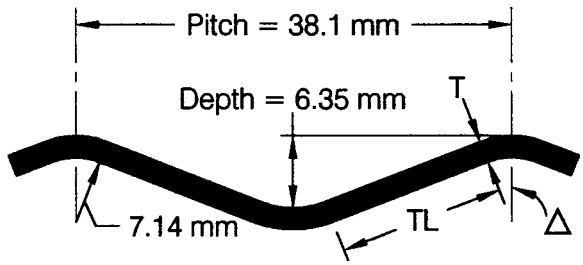

Specified Thickness, mm	Area of Section, A, mm²/mm	Tangent Length, TL, mm	Tangent Angle, Δ,°	Moment of Inertia, I, mm⁴/mm	Radius of Gyration, r, mm
1.02[A]	0.965	14.5	21.44	4.15	2.07
1.32	1.287	14.4	21.52	5.62	2.08
1.63	1.611	14.2	21.61	7.19	2.11
2.01	2.011	14.1	21.71	9.28	2.15

[A]This thickness should only be used for the inner liner of double-wall type IA pipe, or for temporary pipe. When used for other than temporary pipe, it should be polymer coated.

Shape	Maximum Diameter or Span, ft [mm]
pipe, arch	26 [7920 mm]
pipe-arch, underpass	21 [6400 mm]

5.3 This practice is not applicable for pipe with a specified thickness less than 0.052 in. [1.32 mm] for installations under railways and airport runways.

6. Loads

6.1 The design load or pressure on a pipe is comprised of earth load (EL), live load (LL), and impact load (IL). These loads are applied as a fluid pressure acting on the pipe periphery.

6.2 For steel pipe buried in a trench or in an embankment on a yielding foundation, loads are defined as follows:

6.2.1 The earth load (EL) is the weight of the column of soil directly above the pipe:

$$(EL) = Hw \quad (1)$$

6.2.2 *Live Loads*—The live load (LL) is that portion of the weight of vehicle, train, or aircraft moving over the pipe that is distributed through the soil to the pipe.

6.2.2.1 *Live Loads Under Highway*—Live load pressures for H20 highway loadings, including impact effects, are:

Height of Cover, ft [m]	Live Load, lbf/ft² [kPa]
1 [0.30]	1800 [86.2]
2 [0.61]	800 [38.3]
3 [0.91]	600 [28.7]
4 [1.22]	400 [19.2]
5 [1.52]	250 [12.0]
6 [1.83]	200 [9.6]
7 [2.13]	175 [8.4]
8 [2.44]	100 [4.8]
over 8 [over 2.44]	neglect [–]

AVA Documents
Document Sharing Hub

Full document details: ASTM A796/A796M-04

NOTICE: This standard has either been superseded and replaced by a new version or withdrawn.
Please contact ASTM International (www.astm.org) for the latest information.

TABLE 3 Sectional Properties of Corrugated Steel Sheets for Corrugation: 2⅔ by ½ in. (Annular or Helical)

NOTE 1—Dimensions shown in the figure are exact values used in calculating the section properties. Nominal values, for some of these dimensions, are used in other places in this practice.

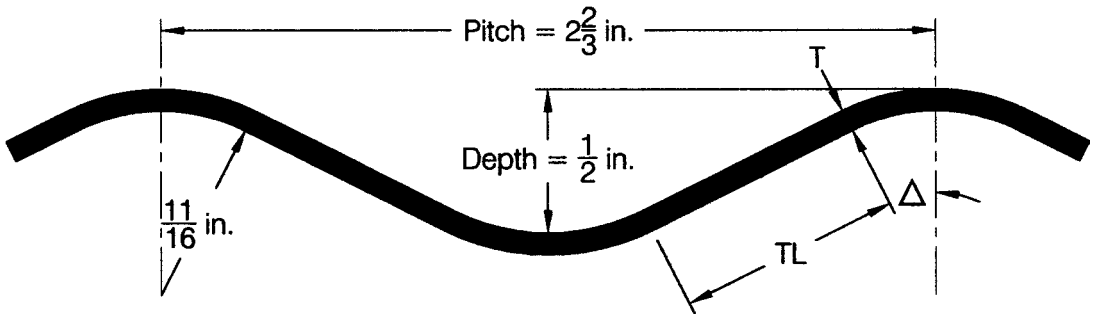

Specified Thickness, in.	Area of Section, A, in.²/ft	Tangent Length, TL, in.	Tangent Angle, Δ,°	Moment of Inertia, I × 10⁻³ in.⁴/in.	Radius of Gyration, r, in.	Ultimate Longitudinal Seam Strength of Riveted or Spot Welded Corrugated Steel Pipe in Pounds per Foot of Seam			
						5/16-in. Rivets		3/8-in. Rivets	
						Single	Double	Single	Double
0.040[A]	0.465	0.785	26.56	1.122	0.1702	. . .	. . .	. . .	. . .
0.052	0.619	0.778	26.65	1.500	0.1707	. . .	. . .	. . .	. . .
0.064	0.775	0.770	26.74	1.892	0.1712	16 700	21 600	. . .	. . .
0.079	0.968	0.760	26.86	2.392	0.1721	18 200	29 800	. . .	. . .
0.109	1.356	0.740	27.11	3.425	0.1741	. . .	. . .	23 400	46 800
0.138	1.744	0.720	27.37	4.533	0.1766	. . .	. . .	24 500	49 000
0.168	2.133	0.699	27.65	5.725	0.1795	. . .	. . .	25 600	51 300

[A]This thickness should only be used for the inner liner of double-wall type IA pipe, or for temporary pipe. When used for other than temporary pipe, it should be polymer coated.

TABLE 4 Sectional Properties of Corrugated Steel Sheets for Corrugation: 68 by 13 mm (Annular or Helical) [SI Units]

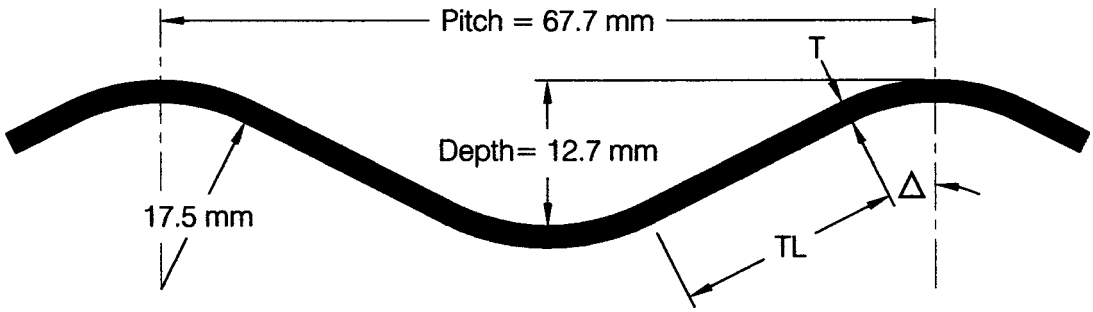

Specified Thickness, mm	Area of Section, A, mm²/mm	Tangent Length, TL, mm	Tangent Angle, Δ, °	Moment of Inertia, I, mm⁴/mm	Radius of Gyration, r, mm	Ultimate Longitudinal Seam Strength of Riveted or Spot Welded Corrugated Steel Pipe in kN per m of Seam			
						8-mm Rivets		10-mm Rivets	
						Single	Double	Single	Double
1.02[A]	0.984	19.9	26.56	18.39	4.232	. . .	. . .	. . .	. . .
1.32	1.310	19.8	26.65	24.58	4.336	. . .	. . .	. . .	. . .
1.63	1.640	19.6	26.74	31.00	4.348	244	315	. . .	. . .
2.01	2.049	19.3	26.86	39.20	4.371	266	435	. . .	. . .
2.77	2.870	18.8	27.11	56.13	4.422	. . .	. . .	341	683
3.51	3.691	18.3	27.37	74.28	4.486	. . .	. . .	357	715
4.27	4.515	17.8	27.65	93.82	4.559	. . .	. . .	374	748

[A]This thickness should only be used for the inner liner of double-wall type IA pipe, or for temporary pipe. When used for other than temporary pipe, it should be polymer coated.

AVA Documents
Document Sharing Hub

Full document details: ASTM A796/A796M-04

NOTICE: This standard has either been superseded and replaced by a new version or withdrawn.
Please contact ASTM International (www.astm.org) for the latest information.

TABLE 5 Sectional Properties of Corrugated Steel Sheets for Corrugation: 3 by 1 in. (Annular or Helical)

NOTE 1—Dimensions shown in the figure are exact values used in calculating the section properties. Nominal values, for some of these dimensions, are used in other places in this practice.

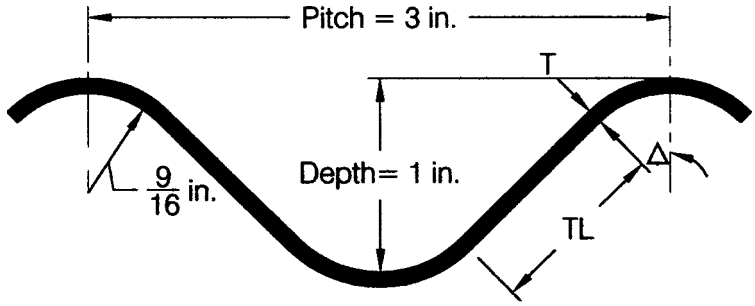

Specified Thickness, in.	Area of Section, A, in.^{2}/ft	Tangent Length, TL, in.	Tangent Angle, Δ, °	Moment of Inertia, I × 10^{-3} in.^{4}/in.	Radius of Gyration, r, in.	Ultimate Longitudinal Seam Strength of Riveted or Spot Welded Corrugated Steel Pipe in Pounds per Foot of Seam	
						⅜-in. Rivets	7/16-in. Rivets
						Double	Double
0.052	0.711	0.951	44.39	6.892	0.3410	. . .	. . .
0.064	0.890	0.938	44.60	8.658	0.3417	28 700	. . .
0.079	1.113	0.922	44.87	10.883	0.3427	35 700	. . .
0.109	1.560	0.889	45.42	15.458	0.3448	. . .	53 000
0.138	2.008	0.855	46.02	20.175	0.3472	. . .	63 700
0.168	2.458	0.819	48.65	25.083	0.3499	. . .	70 700

TABLE 6 Sectional Properties of Corrugated Steel Sheets for Corrugation: 75 by 25 mm (Annular or Helical) [SI Units]

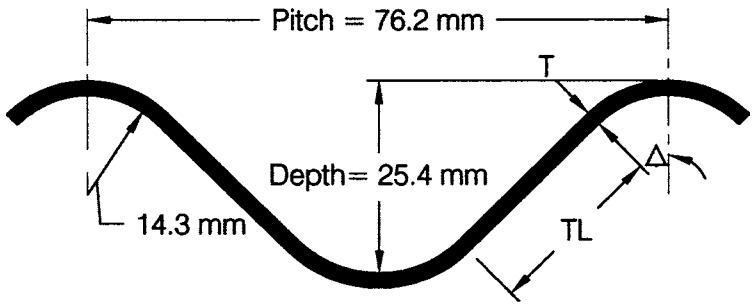

Specified Thickness, mm	Area of Section, A, mm^2/mm	Tangent Length, TL, mm	Tangent Angle, Δ, °	Moment of Inertia, I, mm^4/m	Radius of Gyration, r, mm	Ultimate Longitudinal Seam Strength of Riveted or Spot Welded Corrugated Steel Pipe in kN per m of Seam	
						10-mm Rivets	11-mm Rivets
						Double	Double
1.32	1.505	24.2	44.39	112.94	8.661	. . .	. . .
1.63	1.884	23.8	44.60	141.88	8.679	419	. . .
2.01	2.356	23.4	44.87	178.34	8.705	521	. . .
2.77	3.302	22.6	45.42	253.31	8.758	. . .	773
3.51	4.250	21.7	46.02	330.61	8.819	. . .	929
4.27	5.203	20.8	46.65	411.04	8.887	. . .	1032

6.2.2.2 *Live Loads Under Railways*—Live load pressures for E80 railway loadings, including impact effects, are as follows:

Height of Cover, ft [m]	Live Load, lbf/ft^2 [kPa]
2 [0.61]	3800 [181.9]
5 [1.52]	2400 [114.9]
8 [2.44]	1600 [76.6]
10 [3.05]	1100 [52.7]
12 [3.66]	800 [38.3]
15 [4.57]	600 [28.7]
20 [6.10]	300 [14.4]
30 [9.14]	100 [4.8]
over 30 [over 9.14]	neglect [–]

6.2.2.3 Values for intermediate covers shall be interpolated.

6.2.2.4 *Live Loads Under Aircraft Runways*—Because of the many different wheel configurations and weights, live load pressures for aircraft vary. Such pressures must be determined for the specific aircrafts for which the installation is designed; see FAA Standard AC No. 150/5320-5B.

6.2.3 *Impact Loads*—Loads caused by the impact of moving traffic are important only at low heights of cover. Their effects have been included in the live load pressures in 6.2.2.

Documents
Document Sharing Hub

Full document details: ASTM A796/A796M-04

NOTICE: This standard has either been superseded and replaced by a new version or withdrawn.
Please contact ASTM International (www.astm.org) for the latest information.

TABLE 7 Sectional Properties of Corrugated Steel Sheets for Corrugation: 5 by 1 in. (Helical)

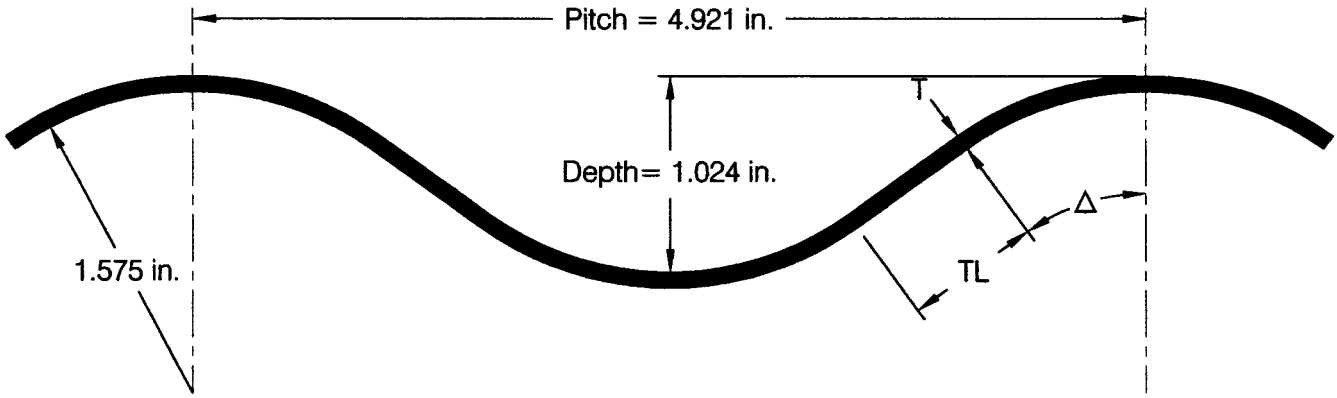

Specified Thickness, in.	Area of Section, A, in.^{2}/ft	Tangent Length, TL, in.	Tangent Angle, Δ,°	Moment of Inertia, I × 10^{-3} in.^{4}/in.	Radius of Gyration, r, in.
0.064	0.794	0.730	35.58	8.850	0.3657
0.079	0.992	0.708	35.80	11.092	0.3663
0.109	1.390	0.664	36.30	15.550	0.3677
0.138	1.788	0.610	36.81	20.317	0.3693
0.168	2.186	0.564	37.39	25.032	0.3711

TABLE 8 Sectional Properties of Corrugated Steel Sheets for Corrugation: 125 by 25 mm (Helical) [SI Units]

NOTE 1—Dimensions shown in the figure are exact values used in calculating the section properties. Nominal values, for some of these dimensions, are used in other places in this practice.

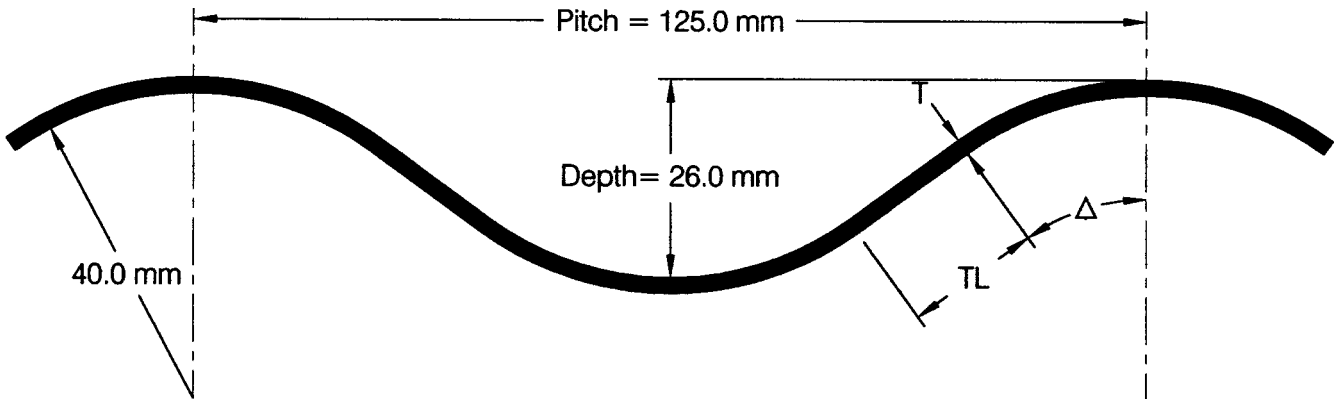

Specified Thickness, mm	Area of Section, A, mm^2/mm	Tangent Length, TL, mm	Tangent Angle, Δ,°	Moment of Inertia, I, mm^4/mm	Radius of Gyration, r, mm
1.63	1.681	18.5	35.58	145.03	9.289
2.01	2.100	18.0	35.80	181.77	9.304
2.77	2.942	16.9	36.30	256.46	9.340
3.51	3.785	15.6	36.81	332.94	9.380
4.27	4.627	14.3	37.39	411.18	9.426

7. Design Method

7.1 Strength requirements for wall strength, buckling strength, and seam strength may be determined by either the allowable stress design (ASD) method presented in Section 8, or the load and resistance factor design (LRFD) method presented in Section 9. Additionally, the design considerations in other paragraphs shall be followed for either design method.

8. Design by ASD Method

8.1 The thrust in the pipe wall shall be checked by three criteria. Each considers the joint function of the steel pipe and the surrounding soil envelope.

8.1.1 *Required Wall Area*:

8.1.1.1 Determine the design pressure and the ring compression thrust in the steel pipe wall as follows:

AVA Documents
Document Sharing Hub

Full document details: ASTM A796/A796M-04