This international standard was developed in accordance with internationally recognized principles on standardization established in the Decision on Principles for the Development of International Standards, Guides and Recommendations issued by the World Trade Organization Technical Barriers to Trade (TBT) Committee.

Designation: A861 – 04 (Reapproved 2023)

Standard Specification for High-Silicon Iron Pipe and Fittings[1]

This standard is issued under the fixed designation A861; the number immediately following the designation indicates the year of original adoption or, in the case of revision, the year of last revision. A number in parentheses indicates the year of last reapproval. A superscript epsilon (ε) indicates an editorial change since the last revision or reapproval.

1. Scope

1.1 This specification covers high-silicon iron pipe and pipe fittings intended for corrosion-resistant service for both above- and below-grade construction.

1.2 The values stated in inch-pound units are to be regarded as standard. The values given in parentheses are mathematical conversions to SI units that are provided for information only and are not considered standard.

1.3 Pipe and pipe fittings shall be the no-hub (MJ) or the hub and plain-end design.

1.4 Pipe and pipe fittings shall be of the sizes specified in Table 1 and Table 2 and Figs. 1–71 or other sizes that shall be permitted to conform to the requirements given herein.

1.4.1 *Pipe:*

1.4.1.1 *No-Hub (MJ) (Fig. 1):*

Size (in.)	Length (ft)
1½	7
2	7
3	7
4	7

1.4.1.2 *Hub/Plain End (Fig. 35):*

Size (in.)	Length (ft)
2	7
3	7
4	7
6	7
8	7
10	5
12	5
15	5

1.4.2 *Fitting (No-Hub) (MJ):*

	Figs.
Quarter Bends	2
Sixth Bends	3
Return Bends	4
Double-Branch Quarter Bend	5
Eighth Bends	6
Sixteenth Bends	7
Long-Sweep Quarter Bends	8
Sanitary Y Branches	9
Double-Branch Sanitary Y	10
Sanitary Combination Y and ⅛ Bend	11
Double-Branch Sanitary Combination Y and ⅛ Bend	12
Sanitary T Branches	13
Double Branch Sanitary T	14
Sanitary Running Traps	15
Sanitary P Traps	16
Swivel Trap P-Style, Short	17
Swivel Trap P-Style, Long	18
Swivel Trap S-Style, Long	19
Centrifugal Drum Trap P Swivel Type	20
Centrifugal Drum Trap S Swivel Type	21
Combination Cleanout and Test Tees	22
Coupling	23
Pipe Plugs	24
Cleanout Plugs	25
No-Hub (MJ) Adapter	26
Reducers-Increasers	27
Sink Outlet	28
Sink Overflows	29
Threaded Adapters	30
Trap Cleanout Details	31
No-Hub (MJ) Adapter	32
(MJ) (No-Hub) to Lead Adapter	33
Floor Drains	34

1.4.3 *Fitting (Hub/Plain End):*

	Figs.
Hub Plain-End Pipe	35
Straight Tees	36
Sanitary T Branches	37
Sanitary Y Branches	38
Double-Branch Sanitary Tee	39
Double-Branch Sanitary Y	40
Double-Branch Sanitary Combination Y and ⅛ Bend (T-Y)	41
Short-Sweep Quarter Bends	42
Long-Sweep Quarter Bends	43
Sanitary Combination Y and ⅛ Bend (T-Y)	44
Quarter Bends	45

[1] This specification is under the jurisdiction of ASTM Committee A04 on Iron Castings and is the direct responsibility of Subcommittee A04.12 on Pipes and Tubes.

Current edition approved May 1, 2023. Published May 2023. Originally approved in 1986. Last previous edition approved in 2017 as A861 – 04 (2017). DOI: 10.1520/A0861-04R23.

Copyright © ASTM International, 100 Barr Harbor Drive, PO Box C700, West Conshohocken, PA 19428-2959. United States

Documents
Document Sharing Hub
Full document details: ASTM A861-04(2023)

Sixth Bends	46
Eighth Bends	47
Sixteenth Bends	48
Sanitary Increasers	49
Hub Strainers	50
Sanitary Reducers	51
Double Hubs	52
Pipe Plugs	53
Cleanout Plugs	54
Adapter – Plain end to Split Flange	55
Adapter – Hub to Split Flange	56
Combination Cleanout and Test Tees	57
Insertable Joints	58
Backwater Valves	59
Sanitary P Traps	60
Sanitary S Traps	61
Sanitary Running Traps	62
Floor Drains	63, 64, 65
Floor Drains	66
Floor Drains/Installation – Funnel Attachment	67, 68
Overflow	69
Sink Outlet	70
Detailed Cross Section of Cleanout	71
Chemical Composition	Table 3
Transverse Bend Test Minimum Requirements	Table S1.1

1.5 *This international standard was developed in accordance with internationally recognized principles on standardization established in the Decision on Principles for the Development of International Standards, Guides and Recommendations issued by the World Trade Organization Technical Barriers to Trade (TBT) Committee.*

2. Referenced Documents

2.1 *ASTM Standards:*[2]

A518/A518M Specification for Corrosion-Resistant High-Silicon Iron Castings

E350 Test Methods for Chemical Analysis of Carbon Steel, Low-Alloy Steel, Silicon Electrical Steel, Ingot Iron, and Wrought Iron

E351 Test Methods for Chemical Analysis of Cast Iron—All Types

2.2 *Other Standards:*

Uniform Classification Rules[3]

National Motor Freight Classification[3]

[2] For referenced ASTM standards, visit the ASTM website, www.astm.org, or contact ASTM Customer Service at service@astm.org. For *Annual Book of ASTM Standards* volume information, refer to the standard's Document Summary page on the ASTM website.

[3] Available from American Trucking Association, 950 North Glebe Road, Suite 210, Arlington, VA 22203-4181.

TABLE 1 Tolerances for High-Silicon Iron Hub/Plain-End Pipe

NOTE 1—1 in. = 25.4 mm.

Size, in.	Wall Thickness, in.	ID Tolerance, in.	OD Tolerance, in.
2	±1/32	±1/32	±1/32
3	±1/32	±1/32	±1/32
4	±1/32	±1/32	±1/32
6	±1/32	±1/32	±3/64
8	±1/32	±1/8	±1/8
10	±1/8	±1/8	±1/8
12	±1/8	±1/8	±1/8
15	±1/8	±1/8	±1/8

TABLE 2 Tolerances for High-Silicon Iron Fittings

NOTE 1—1 in. = 25.4 mm.

Size, in.	ID Tolerance, in.	OD Tolerance, in.	Stop Lug Depth Tolerance, in.
1½	±1/16	±1/16	±1/16
1½ × 1½	±1/16	±1/16	±1/16
2	±1/16	±1/16	±1/16
2 × 1½	±1/16	±1/16	±1/16
2 × 2	±1/16	±1/16	±1/16
3	±1/16	±1/16	±1/16
3 × 1½	±1/16	±1/16	±1/16
3 × 2	±1/16	±1/16	±1/16
3 × 3	±1/16	±1/16	±1/16
4	±1/16	±1/16	±1/16
4 × 1½	±1/16	±1/16	±1/16
4 × 2	±1/16	±1/16	±1/16
4 × 3	±1/16	±1/16	±1/16
4 × 4	±1/16	±1/16	±1/16

TABLE 3 Chemical Composition

Element	Composition, Weight %	
	Grade 1	Grade 2
Carbon	0.65–1.10	0.75–1.15
Manganese	1.50 max	1.50 max
Silicon	14.20–14.75	14.20–14.75
Chromium	0.50 max	3.25–5.00
Molybdenum	0.50 max	0.40-0.60
Copper	0.50 max	0.50 max

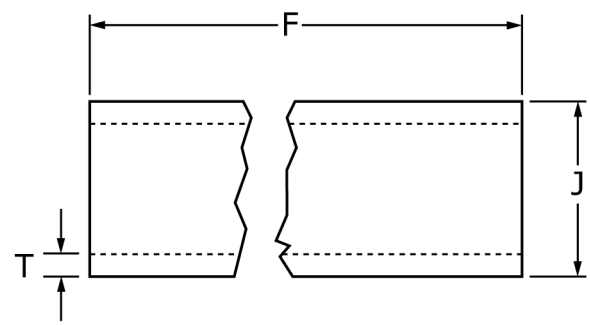

Size, in.	J, in.	F, in.	t, in.
1½	2 3/16 (2.19)	84	5/16
2	2 11/16 (2.69)	84	5/16
3	3 49/64 (3.77)	84	5/16
4	4 49/64 (4.77)	84	5/16

NOTE 1—1 in. = 25.4 mm.

FIG. 1 No-Hub Pipe (MJ)

3. Terminology

3.1 *Definitions of Terms Specific to This Standard:*

3.1.1 *hubless*—a pipe or fitting without a hub, sometimes called no-hub, joined by a coupling.

3.1.2 *MJ*—an abbreviation for mechanical joint.

3.1.3 *no-hub*—a pipe or fitting without a hub, sometimes described as hubless joined by a coupling.

4. Ordering Information

4.1 Ordering for material under this specification shall include as a minimum the following information:

AVA Documents
Document Sharing Hub

Full document details: ASTM A861-04(2023)

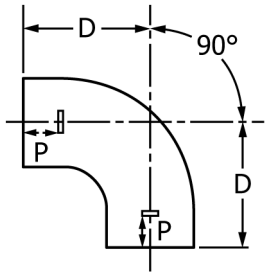

Size, in.	D, in.	ID, in.	OD, in.	Stop Lug Depth (P), in.
1½	4¼	1½	2³⁄₁₆ (2.19)	1¹⁄₃₂
2	4½	2	2⅝ (2.62)	1¹⁄₃₂
2 × 1½	4³⁄₁₆ × 4½	2 × 1½	2⅝ × 2³⁄₁₆	1¹⁄₃₂
3	5	3	3¾ (3.75)	1¹⁄₃₂
4	5½	4	4¾ (4.75)	1¹⁄₃₂

NOTE 1—1 in. = 25.4 mm.

FIG. 2 Quarter Bends

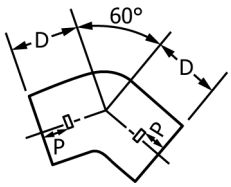

Size, in.	D, in.	ID, in.	OD, in.	Stop Lug Depth (P), in.
1½	3	1½	2³⁄₁₆	1¹⁄₃₂
2	3¼	2	2⅝	1¹⁄₃₂
3	3½	3	3¾	1¹⁄₃₂
4	3¾	4	4¾	1¹⁄₃₂

NOTE 1—1 in. = 25.4 mm.

FIG. 3 Sixth Bends

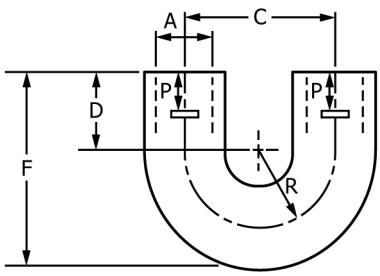

Size, in.	C, in.	D, in.	F, in.	R, in.	ID, in.	OD, in.	Stop Lug Depth (P), in.
1½	4	2	5³⁄₃₂	2	1½	2³⁄₁₆	1¹⁄₃₂
2	4¾	2	5¹¹⁄₁₆	2⅜	2	2⅝	1¹⁄₃₂

NOTE 1—1 in. = 25.4 mm.

FIG. 4 Return Bends

4.1.1 ASTM designation, grade (see Table 3), and year of issue.

4.1.2 Description of the casting by figure number (see Figs. 1–71) or by manufacturer's drawings or catalog number, or both.

4.1.3 Length, diameter, and type of pipe and size and shape of fittings.

4.1.4 Quantity.

4.1.5 Certification requirements.

4.1.6 Special packaging requirements (see Section 14).

4.1.7 Supplemental requirements desired, if any.

5. Materials and Manufacture

5.1 The castings shall be produced by any established commercial practice applicable to high-silicon iron.

5.2 The castings shall be true to pattern, reasonably smooth, and free from defects that would make the castings unfit for the use for which they are intended.

6. Chemical Composition

6.1 An analysis of each heat shall be made by the manufacturer from a test sample that is representative of the heat and that is taken during the heat. A heat shall consist of all castings poured from a furnace or crucible melt without recharging new metal into the furnace. The chemical composition thus determined shall conform to the requirements for the grade selected specified in Table 3.

6.2 A product analysis shall be permitted to be made by the purchaser from material representing the heat. The chemical composition thus determined shall meet the requirements specified in Table 3 or shall be subject to rejection by the purchaser.

6.3 Spectrometric or other instrumental methods and wet laboratory methods are acceptable for routine control determinations. Any method employed shall give essentially the same results as reference methods listed in Test Methods E350. (For selected detailed methods of analysis, see Specification A518/A518M, paragraph 6.4).

7. Heat Treatment

7.1 All centrifugally cast high-silicon iron pipe shall be supplied in the as-cast condition. All other pipe and fittings shall be supplied in the stress-relieved condition.

7.2 Stress relieving shall be performed as follows:

7.2.1 Hold the casting at 1650 °F (870 °C) minimum for 2 h plus an additional hour per inch of section thickness for castings over 2 in. in thickness.

7.2.2 Cool the castings to 400 °F (205 °C) maximum at a rate not to exceed 100 °F (55 °C)/15 min.

7.2.3 From 400 °F (205 °C) to ambient, the castings shall be permitted to be cooled in still, ambient air.

8. Joints

8.1 Acid-proof joints for hub/plain-end pipe shall require the use of an acid-proof rope packing.

8.2 No-hub pipe and fittings shall require a special acid-resistant mechanical joint (MJ) coupling. One satisfactory coupling consists of an inner PTFE sleeve surrounded by neoprene. The two-bolt coupling is made of 300 series stainless steel.

8.3 High-silicon iron pipe can be cut with either manual or hydraulic snap cutters. Field cuts shall be permitted to be

AVA Documents
Document Sharing Hub

Full document details: ASTM A861-04(2023)

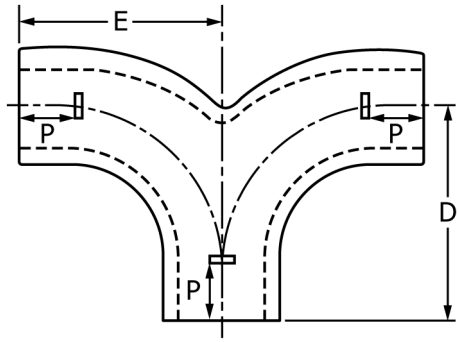

Size, in.	D, in.	E, in.	ID, in.	OD, in.	Stop Lug Depth (P), in.
1½	3⅞	3¾	1½	2 3/16	1 1/32

NOTE 1—1 in. = 25.4 mm.

FIG. 5 Double-Branch Quarter Bend

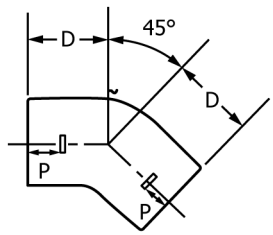

Size, in.	D, in.	ID, in.	OD, in.	Stop Lug Depth (P), in.
1½	2½	1½	2 3/16	1 1/32
2	2¾	2	2⅝	1 1/32
3	3	3	3¾	1 1/32
4	3¼	4	4¾	1 1/32

NOTE 1—1 in. = 25.4 mm.

FIG. 6 Eighth Bends

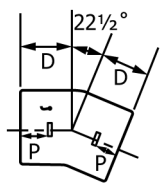

Size, in.	D, in.	ID, in.	OD, in.	Stop Lug Depth (P), in.
1½	2	1½	2 3/16	1 1/32
2	2⅛	2	2⅝	1 1/32
3	2¼	3	3¾	1 1/32
4	2⅜	4	4¾	1 1/32

NOTE 1—1 in. = 25.4 mm.

FIG. 7 Sixteenth Bends

readily used with mechanical joint couplings to provide acceptable leak-proof joints.

9. Dimensions and Permissible Variations

9.1 *Pipe:*

9.1.1 Hub/plain-end pipe shall have a hub at one end and a plain end at the other and shall be cast in one piece (see Fig. 35).

9.1.2 Individual length of hub/plain-end pipe shall be either 7 or 5 ft nominal laying lengths as shown in Fig. 35.

AVA Documents
Document Sharing Hub

Full document details: ASTM A861-04(2023)

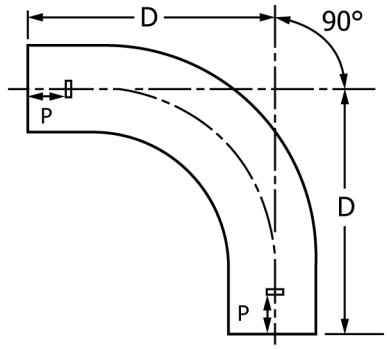

Size, in.	D, in.	ID, in.	OD, in.	Stop Lug Depth (P), in.
1½	9¼	1½	2 3/16	1 1/32
2	9½	2	2⅝	1 1/32
3	10	3	3¾	1 1/32
4	10½	4	4¾	1 1/32

FIG. 8 Long-Sweep Quarter Bends

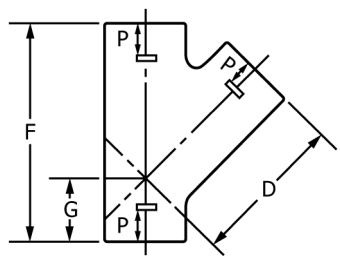

Size, in.	D, in.	F, in.	G, in.	ID, in	OD, in.	Stop Lug Depth (P), in.
½ × 1½	4⅝	6½	1⅞	1½ × 1½	2 3/16 × 2 3/16	1 1/32
2 × 1½	4⅞	6½	1⅝	2 × 1½	2⅝ × 2 3/16	1 1/32
2 × 2	4⅝	6⅜	2	2 × 2	2⅝ × 2⅝	1 1/32
3 × 1½	5⅝	6½	1¼	3 × 1½	3¾ × 2 3/16	1 1/32
3 × 2	5⅞	7⅛	1½	3 × 2	3¾ × 2⅝	1 1/32
3 × 3	6⅜	8⅝	2¼	3 × 3	3¾ × 3¾	1 1/32
4 × 1½	6⅝	7½	1⅜	4 × 1½	4¾ × 2 3/16	1 1/32
4 × 2	6⅝	7½	1⅜	4 × 2	4¾ × 2⅝	1 1/32
4 × 3	7⅛	8¾	1¾	4 × 3	4¾ × 3¾	1 1/32
4 × 4	7⅝	10¼	2⅝	4 × 4	4¾ × 4¾	1 1/32

NOTE 1—1 in. = 25.4 mm.

FIG. 9 Sanitary Y Branches

9.1.3 Any deflections in the barrel of a single length of pipe shall not exceed 3/16 in.

9.1.4 No-hub pipe shall be cast in a single piece and conform to nominal dimensions shown in Fig. 1.

9.1.5 No dimension of hub/plain-end pipe shall exceed the tolerances specified in Table 1.

9.2 *Fittings*—All fittings shall conform to the nominal dimensions specified in applicable figures and be within the tolerances specified in Table 2 for fittings listed in Figs. 2–34 or in Table 1 for fittings listed in Figs. 36–39.

10. Inspection

10.1 *Inspection and Test by the Manufacturer*—Pipe and fittings shall be inspected by the manufacturer prior to shipment. Inspection by the manufacturer shall include all tests as specified herein. All tests and inspection with the exception of product analysis shall be made at the place of manufacture unless otherwise agreed upon.

10.2 *Inspection and Test by the Purchaser*—The manufacturer shall afford the purchaser's inspector all reasonable facilities necessary to satisfy that the material is being produced and furnished in accordance with this specification. Foundry inspection by the purchaser shall not interfere unnecessarily with the manufacturer's operations.

11. Rejection and Rehearing

11.1 Material that shows unacceptable discontinuities as determined by the acceptance standards specified in the order, subsequent to its acceptance at the manufacturer's works, shall be rejected and the manufacturer shall be notified within 30 days unless otherwise agreed upon.

AVA Documents
Document Sharing Hub

Full document details: ASTM A861-04(2023)

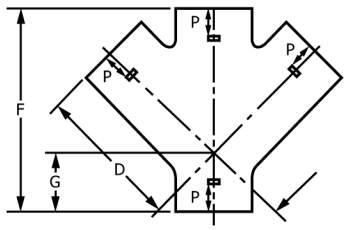

Size, in.	D, in.	F, in.	G, in.	ID, in.	OD, in.	Stop Lug Depth (P), in.
1½ × 1½	4⅝	6½	1⅞	1½ × 1½	2³⁄₁₆ × 2³⁄₁₆	1¹⁄₃₂
2 × 1½	4⅞	6½	1⅝	2 × 1½	2⅝ × 2³⁄₁₆	1¹⁄₃₂
2 × 2	4⅝	6⅜	2	2 × 2	2⅝ × 2⅝	1¹⁄₃₂
3 × 1½	5⅝	6½	1¼	3 × 1½	3¾ × 2³⁄₁₆	1¹⁄₃₂
3 × 2	5⅞	7⅛	1½	3 × 2	3¾ × 2⅝	1¹⁄₃₂
3 × 3	6⅜	8⅝	2¼	3 × 3	3¾ × 3¾	1¹⁄₃₂
4 × 2	6⅝	7½	1⅜	4 × 2	4¾ × 2⅝	1¹⁄₃₂
4 × 3	7⅛	8¾	1¾	4 × 3	4¾ × 3¾	1¹⁄₃₂
4 × 4	7⅝	10¼	2⅝	4 × 4	4¾ × 4¾	1¹⁄₃₂

NOTE 1—1 in. = 25.4 mm.

FIG. 10 Double-Branch Sanitary Y

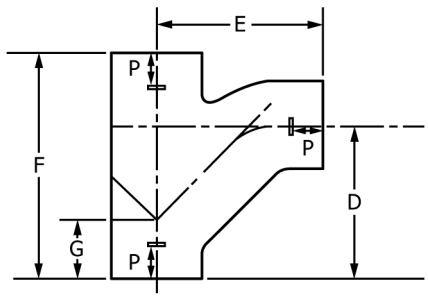

Size, in.	D, in.	E, in.	F, in.	G, in.	ID, in.	OD, in.	Stop Lug Depth (P), in.
1½ × 1½	4¾	5⅜	6½	1⅞	½ × 1½	2³⁄₁₆ × 2³⁄₁₆	1¹⁄₃₂
2 × 1½	4¾	5¾	6½	1⅝	2 × 1½	2⅝ × 2³⁄₁₆	1¹⁄₃₂
2 × 2	5	5⅞	6⅝	1⅞	2 × 2	2⅝ × 2⅝	1¹⁄₃₂
3 × 1½	4	5¼	6½	1⅝	3 × 1½	3¾ × 2³⁄₁₆	1¹⁄₃₂
3 × 2	5	6¼	7⅛	1½	3 × 2	3¾ × 2⅝	1¹⁄₃₂
3 × 3	6¼	7	8½	2¼	3 × 3	3¾ × 3¾	1¹⁄₃₂
4 × 1½	4⁵⁄₁₆	6⅛	6⅝	1⅜	4 × 1½	4¾ × 2³⁄₁₆	1¹⁄₃₂
4 × 2	5	6⅜	7⅜	1⅜	4 × 2	4¾ × 2⅝	1¹⁄₃₂
4 × 3	6	7¼	8¾	1¾	4× 3	4¾ × 3¾	1¹⁄₃₂
4 × 4	7⅜	8	10¼	2⅝	4× 4	4¾ × 4¾	1¹⁄₃₂

NOTE 1—1 in. = 25.4 mm.

FIG. 11 Sanitary Combination Y and ⅛ Bend

12. Certification

12.1 Upon request of the purchaser, the manufacturer shall certify that his product conforms to the requirements of this specification. The results of tests shall be furnished to the purchaser upon request as mutually agreed upon.

13. Product Marking

13.1 Each length of pipe and fitting shall be identified by the manufacturer's name or identification mark. Marking shall be as not to impair the usefulness of the part.

13.2 Samples that represent rejected material shall be preserved for a minimum of two weeks from the date of transmission of the rejection report. In case of dissatisfaction with the results of the tests, the manufacturer shall be permitted to make claim for a rehearing within that time.

14. Packaging

14.1 Unless otherwise specified, the material shall be packaged in accordance with the supplier's standard practice and acceptable to the carrier at the lowest rates. Containers and

AVA Documents
Document Sharing Hub

Full document details: ASTM A861-04(2023)

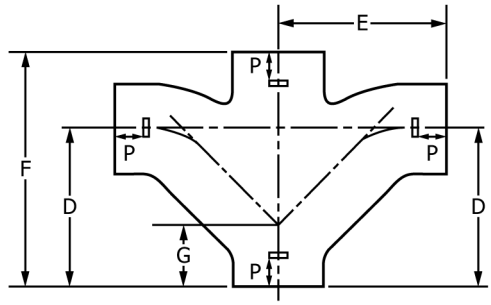

Size, in.	D, in.	E, in.	F, in.	G, in.	ID, in.	OD, in.	Stop Lug Depth (P), in.
1½ × 1½	4¾	5⅜	6½	7⅞	1½ × 1½	2³⁄₁₆ × 2³⁄₁₆	1¹⁄₃₂
2 × 1½	4¾	5¾	6½	1⅝	2 × 1½	2⅝ × 2³⁄₁₆	1¹⁄₃₂
2 × 2	5	5⅞	6⅝	1⅝	2 × 2	2⅝ × 2⅝	1¹⁄₃₂
3 × 1½	4¼	5¼	6½	1⅝	3 × 1½	3¾ × 2³⁄₁₆	1¹⁄₃₂
3 × 2	5	6¼	7⅛	1½	3 × 2	3¾ × 2⅝	1¹⁄₃₂
3 × 3	6¼	7	8½	2¼	3 × 3	3¾ × 3¾	1¹⁄₃₂
4 × 2	5	6⅜	7⅜	1⅜	4 × 2	4¾ × 2⅝	1¹⁄₃₂
4 × 3	6	7¼	8¾	1¾	4 × 3	4¾ × 3¾	1¹⁄₃₂
4 × 4	7⅜	8	10¼	2⅝	4 × 4	4¾ × 4¾	1¹⁄₃₂

NOTE 1—1 in. = 25.4 mm.

FIG. 12 Double-Branch Sanitary Combination Y and ⅛ Bend

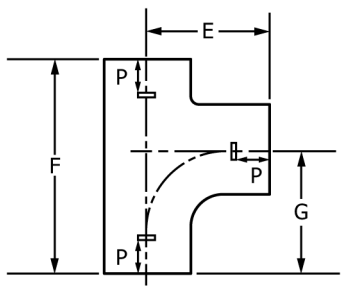

Size, in.	E, in.	F, in.	G, in.	ID, in.	OD, in.	Stop Lug Depth (P), in.
1½ × 1½	4¼	6¾	4¼	1½ × 1½	2³⁄₁₆ × 2³⁄₁₆	1¹⁄₃₂
2 × 1½	4½	6¾	4¼	2 × 1½	2⅝ × 2³⁄₁₆	1¹⁄₃₂
2 × 1½ × 1½	4½	6¾	4¼	2 × 1½ × 1½	2⅝ × 2³⁄₁₆ × 2³⁄₁₆	1¹⁄₃₂
2 × 2	4½	6⅞	4½	2 × 2	2 ⅝ × 2⅝	1¹⁄₃₂
3 × 1½	5	6¾	4¼	3 × 1½	3¾ × 2³⁄₁₆	1¹⁄₃₂
3 × 2	5	7¼	4½	3 × 2	3¾ × 2 ⅝	1¹⁄₃₂
3 × 3	5	8⅜	5	3× 3	3¾ × 3¾	1¹⁄₃₂
4 × 1½	5⁹⁄₁₆	6⅞	4⁷⁄₃₂	4× 1½	4¾ × 2³⁄₁₆	1¹⁄₃₂
4 × 2	5½	7¼	4½	4 × 2	4¾ × 2⅝	1¹⁄₃₂
4 × 3	5½	8¼	5	4 × 3	4¾ × 3¾	1¹⁄₃₂
4 × 4	5½	9⅜	5½	4 × 4	4¾ × 4¾	1¹⁄₃₂

NOTE 1—1 in. = 25.4 mm.

FIG. 13 Sanitary T Branches

packing shall comply with Uniform Classification Rules or National Motor Freight Classification Rules.

15. Keywords

15.1 corrosion resistant; fittings; high-silicon iron; hubless; hub/plain-end; no-hub; plain-end

AVA Documents
Document Sharing Hub

Full document details: ASTM A861-04(2023)

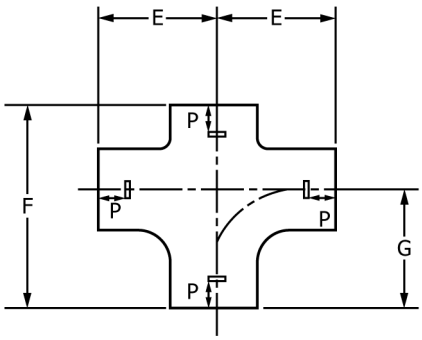

Size, in.	E, in.	F, in.	G, in.	ID, in.	OD, in.	Stop Lug Depth (P), in.
1½ × 1½	4¼	6¾	4¼	1½ × 1½	2³⁄₁₆ × 2³⁄₁₆	1¹⁄₃₂
2 × 1½	4½	6¾	4¼	2 × 1½	2⅝ × 2³⁄₁₆	1¹⁄₃₂
2 × 2	4½	6⅞	4½	2 × 2	2⅝ × 2⅝	1¹⁄₃₂
3 × 1½	5	6¾	4¼	3 ×1½	3¾ × 2³⁄₁₆	1¹⁄₃₂
3 × 2	5	7¼	4½	3 × 2	3¾ × 2⅝	1¹⁄₃₂
3 × 3	5	8⅜	5	3 × 3	3¾ × 3¾	1¹⁄₃₂
4 × 2	5½	7¼	4½	4 × 2	4⅜ × 2⅝	1¹⁄₃₂
4 × 3	5½	8¼	5	4 × 3	4¾ × 3¾	1¹⁄₃₂
4 × 4	5½	9⅜	5½	4 × 4	4⅜ × 4⅜	1¹⁄₃₂

NOTE 1—1 in. = 25.4 mm.

FIG. 14 Double-Branch Sanitary T

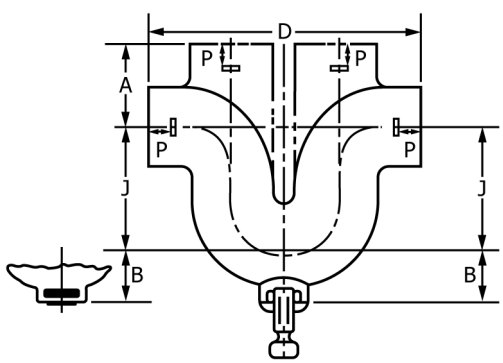

Size, in.	A, in.	B, in.	C, in.	D, in.	J, in.	R, in.	ID, in.	OD, in.	Stop Lug Depth (P), in.
1½	2¾	1⅝	5	10	4	1¾	1½	2³⁄₁₆	1¹⁄₃₂
2	3½	1¹⁵⁄₁₆	5½	11	4	2	2	2⅝	1¹⁄₃₂
3	4	2⁵⁄₁₆	6½	13	5½	2½	3	3¾	1¹⁄₃₂
4	4½	3	7½	15	6½	3	4	4¾	1¹⁄₃₂

NOTE 1—1 in. = 25.4 mm.

FIG. 15 Sanitary Running Traps

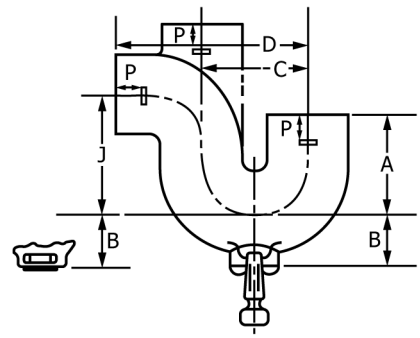

Size, in.	A, in.	B, in.	C, in.	D, in.	J, in.	R, in.	ID, in.	OD, in.	Stop Lug Depth (P), in.
1½	3¾	1⅝	3½	6¾	4	1¾	1½	2³⁄₁₆	1¹⁄₃₂
2	4	1¹⁵⁄₁₆	4	7½	4	2	2	2⅝	1¹⁄₃₂
3	4½	2⁵⁄₁₆	5	9	5½	2½	3	3¾	1¹⁄₃₂
4	5	3	6	10½	6½	3	4	4¾	1¹⁄₃₂

NOTE 1—1 in. = 25.4 mm.

FIG. 16 Sanitary P Traps

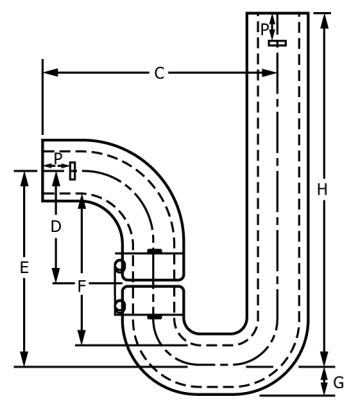

Size, in.	C, in.	D, in.	E, in.	F, in.	G, in.	H, in.	ID, in.	OD, in.	Stop Lug Depth (P), in.
1½	8¾	4	6¹⁵⁄₁₆	5⁷⁄₁₆	1³⁄₃₂	12½	1½	2³⁄₁₆	1¹⁄₃₂
2	9¾	4½	7¾	5¾	1⅜	12	2	2⅝	1¹⁄₃₂

NOTE 1—1 in. = 25.4 mm.

FIG. 17 Swivel Trap P-Style, Short

Documents
Document Sharing Hub
Full document details: ASTM A861-04(2023)