This international standard was developed in accordance with internationally recognized principles on standardization established in the Decision on Principles for the Development of International Standards, Guides and Recommendations issued by the World Trade Organization Technical Barriers to Trade (TBT) Committee.

Designation: A888 – 24

Standard Specification for Hubless Cast Iron Soil Pipe and Fittings for Sanitary and Storm Drain, Waste, and Vent Piping Applications[1]

This standard is issued under the fixed designation A888; the number immediately following the designation indicates the year of original adoption or, in the case of revision, the year of last revision. A number in parentheses indicates the year of last reapproval. A superscript epsilon (ε) indicates an editorial change since the last revision or reapproval.

1. Scope

1.1 This specification covers hubless cast iron soil pipe and fittings for use in gravity flow applications. It establishes standards covering material, manufacture, mechanical and chemical properties, dimensions, coating, test methods, inspection, certification, and product marking for hubless cast iron soil pipe and fittings. These pipe and fittings are intended for non-pressure applications, as the selection of the proper size for sanitary drain, waste, vent, and storm drain systems allows free air space for gravity drainage.

1.2 The EDP/ASA numbers indicated in this section represent a Uniform Industry Code adopted by the American Supply Association (ASA). A group designation prefix, 022, is assigned to hubless products, followed by the four-digit identification assigned to individual items and a check digit. This system has been instituted to facilitate EDP control through distribution channels, and is to be used universally in ordering and specifying product items. Those items with no EDP numbers are either new, special, or transitory and will be assigned numbers on subsequent prints of this specification.

1.3 This specification covers pipe and fittings of the following patterns and applies to any other patterns that conform with the dimensions found in Tables 1 and 2 and all other applicable requirements given in this specification.[2]

1.3.1 *Lengths:*

	Figures
EDP/ASA Identification Numbers for Hubless Pipe	Fig. 1
10 ft (3.0 m) in sizes and 5 ft. (1.5 m) 1½, 2, 3, 4, 5, 6, 8, 10, 12, and 15 in.	Fig. 1, Fig. 2
Method of Specifying Fittings	Fig. 3

1.3.2 *Fittings:*

Quarter Bend	Fig. 5
Quarter Bend, Reducing	Fig. 6
Quarter Bend, with Side Opening	Fig. 7
Quarter Bend, with Heel Opening	Fig. 8
Quarter Bend, Tapped	Fig. 9
Quarter Bend, Double	Fig. 10
Quarter Bend, Long	Fig. 11
Short Sweep	Fig. 12
Long Sweep	Fig. 13
Long Sweep, Reducing	Fig. 14
Fifth Bend	Fig. 15
Sixth Bend	Fig. 16
Eighth Bend	Fig. 17
Eighth Bend, Long	Fig. 18
Sixteenth Bend	Fig. 19
Sanitary Tee	Fig. 20
Sanitary Tee with Side Opening	Fig. 21
Sanitary Tee with 2 in. Side Opening R or L/R and L	Fig. 22
Sanitary Tee, New Orleans Special with Side Opening	Fig. 23
Sanitary Tee with 45° Side Openings and New Orleans	Fig. 24
Sanitary Special Tee Tapped	Fig. 25
Sanitary Tapped Tee, Horizontal Twin	Fig. 26
Sanitary Tapped Tee, Double Vertical	Fig. 27
Y Branch	Fig. 28
Y Branch, Double	Fig. 29
Y Branch, Upright	Fig. 30
Upright Y Wide Center Florida Special	Fig. 31
Y Branch, Combination ⅛ Bend	Fig. 32
Y Branch, Combination ⅛ Bend Double	Fig. 33
Sanitary Cross	Fig. 34
Sanitary Cross with Side Opening	Fig. 35
Sanitary Cross, New Orleans, with Side Openings	Fig. 36
Sanitary Cross, New Orleans, with 45° Special and Regular Side Openings	Fig. 37
Sanitary Cross, Tapped	Fig. 38
Test Tee	Fig. 39
Tapped Extension Piece	Fig. 40
Increaser-Reducer	Fig. 41
Increaser-Reducer, Short	Fig. 42
Tapped Adapter	Fig. 43
Blind Plug	Fig. 44
Iron Body Cleanout, Tapped	Fig. 45
P Trap	Fig. 46
P Trap, Long	Fig. 47
P Trap, Deep Seal	Fig. 48
P Trap, with Primer	Fig. 49
P Trap, with Tapped Inlet	Fig. 50
Tapped Inlet, Double	Fig. 51
Modified Combination Wye and ⅛ Bend, Double	Fig. 52
Modified Combination Wye and ⅛ Bend, Double, Extended	Fig. 53
Two-Way Cleanout	Fig. 54
Twin Cleanout	Fig. 55

[1] This specification is under the jurisdiction of ASTM Committee A04 on Iron Castings and is under the direct responsibility of Subcommittee A04.12 on Pipes and Tubes.

Current edition approved April 1, 2024. Published May 2024. Originally approved in 1990. Last previous edition approved in 2023 as A888 – 23. DOI: 10.1520/A0888-24.

[2] Reprinted with permission from Cast Iron Soil Pipe Institute (CISPI), 2401 Fieldcrest Dr., Mundelein, IL 60060, http://www.cispi.org. Available from American National Standards Institute (ANSI), 25 W. 43rd St., 4th Floor, New York, NY 10036, http://www.ansi.org.

Copyright © ASTM International, 100 Barr Harbor Drive, PO Box C700, West Conshohocken, PA 19428-2959. United States

Documents
Document Sharing Hub
Full document details: ASTM A888-24

Closet Bend, Regular and Reducing	Fig. 56
Closet Flange Riser	Fig. 57
Tapping Bosses	Fig. 58
Double Sweep Sanitary Tee (Extended)	Fig. 59
Running Trap with Double Vents	Fig. 60
P Trap with Tapped or Hubless Side Inlet	Fig. 61
Vented Tub Wye Extended, Double	Fig. 62
Vented Tub Wye Extended Offset, Left or Right	Fig. 63
Vented Tub Wye	Fig. 64
Double Two-Way Cleanout	Fig. 65

1.4 The values stated in inch-pound units are to be regarded as standard. The values given in parentheses are mathematical conversions to SI units that are provided for information only and are not considered standard.

1.5 The committee with jurisdiction over this standard is aware of another comparable standard published by the Cast Iron Soil Pipe Institute, CISPI 301.

NOTE 1—The text of this standard references notes and footnotes that provide explanatory material. These notes and footnotes (excluding those in tables and figures) shall not be considered as requirements of the standard.

1.6 *This international standard was developed in accordance with internationally recognized principles on standardization established in the Decision on Principles for the Development of International Standards, Guides and Recommendations issued by the World Trade Organization Technical Barriers to Trade (TBT) Committee.*

2. Referenced Documents

2.1 *ASTM Standards:*[3]

A48/A48M Specification for Gray Iron Castings

A644 Terminology Relating to Iron Castings

D1248 Specification for Polyethylene Plastics Extrusion Materials for Wire and Cable

D3960 Practice for Determining Volatile Organic Compound (VOC) Content of Paints and Related Coatings

E8/E8M Test Methods for Tension Testing of Metallic Materials

E1645 Practice for Preparation of Dried Paint Samples by Hotplate or Microwave Digestion for Subsequent Lead Analysis

E2349 Practice for Safety Requirements in Metal Casting Operations: Sand Preparation, Molding, and Core Making; Melting and Pouring; and Cleaning and Finishing

2.2 *Federal Standard:*[4]

Fed. Std. No. 123 Marking for Shipment (Civil Agencies)

2.3 *Military Standard:*[4]

MIL-STD-129 Military Marking for Shipment and Storage

2.4 *ANSI/ASME Standard:*[5]

B1.20 Pipe Threads

2.5 *Other Documents:*

Uniform Freight Classification Rules[6]

National Motor Freight Classification Rules[7]

Cast Iron Soil Pipe Institute (CISPI) Specification 301[8]

3. Terminology

3.1 *Abbreviations:*

3.1.1 *AC*—above center

3.1.2 *ADAPTR*—adapter

3.1.3 *&*—and

3.1.4 *ASA*—American Supply Association

3.1.5 *ASSY*—assembly

3.1.6 *BD*—bend

3.1.7 *CARL*—Carlson

3.1.8 *CF*—Carlson fitting

3.1.9 *CLO*—closet

3.1.10 *CO*—cleanout

3.1.11 *COMB*—combination

3.1.12 *CRS*—cross

3.1.13 *DB*—double

3.1.14 *DBL*—double

3.1.15 *EDP*—electronic data processing

3.1.16 *EXT*—extended, extension

3.1.17 *F*—figure

3.1.18 *FER*—ferrule

3.1.19 *FLNG*—flange

3.1.20 *FTG*—fitting

3.1.21 *HI*—high

3.1.22 *HOR*—horizontal

3.1.23 *INC*—increaser, increasing

3.1.24 *L*—left hand

3.1.25 *L/*—less

3.1.26 *LG*—long

3.1.27 *LH*—left hand

3.1.28 *LNG*—long

3.1.29 */MAIN*—on main

3.1.30 *MN*—on main

3.1.31 *NO*—New Orleans

3.1.32 *R*—right hand

3.1.33 *RAD*—radius

3.1.34 *RED*—reducer, reducing

3.1.35 *REV*—revent

3.1.36 *RH*—right hand

[3] For referenced ASTM standards, visit the ASTM website, www.astm.org, or contact ASTM Customer Service at service@astm.org. For *Annual Book of ASTM Standards* volume information, refer to the standard's Document Summary page on the ASTM website.

[4] Available from Standardization Documents Order Desk, DODSSP, Bldg. 4, Section D, 700 Robbins Ave., Philadelphia, PA 19111-5098, http://www.dodssp.daps.dla.mil.

[5] Available from American National Standards Institute (ANSI), 25 W. 43rd St., 4th Floor, New York, NY 10036, http://www.ansi.org.

[6] Available from the Uniform Classification Commission, Room 1106, 222 S. Riverside Plaza, Chicago, IL 60606.

[7] Available from National Motor Freight Traffic Association, Inc. (NMFTA), 1001 N. Fairfax St., Suite 600, Alexandria, VA 22314-1798, http://www.nmfta.org.

[8] Available from Cast Iron Soil Pipe Institute (CISPI), 2401 Fieldcrest Dr., Mundelein, IL 60060, http://www.cispi.org.

AVA Documents
Document Sharing Hub

Full document details: ASTM A888-24

3.1.37 *SAN*—sanitary

3.1.38 *SD*—side

3.1.39 *SL & NOTCH*—slotted and notched

3.1.40 *SO*—side openings

3.1.41 *ST*—sanitary tap

3.1.42 *T*—tee

3.1.43 *TAP*—tap, tapped

3.1.44 *TOT*—tap on top

3.1.45 *TP*—tap, tapped

3.1.46 *V*—vent

3.1.47 *VERT*—vertical

3.1.48 *W/*—with

3.1.49 *Y*—wye

3.2 *Definitions of Terms Specific to This Standard:*

3.2.1 *manufacturer*—the entity that casts the pipe and fittings covered by this standard.

4. Materials and Manufacture

4.1 The pipe and fittings shall be iron castings suitable for installation and service for sanitary, storm drain, waste, and vent piping applications. The pipe and fittings shall meet all applicable requirements and tests given in this specification.

4.2 The castings shall be made of cast iron, produced by an established commercial method that provides control over chemical and mechanical properties. "Cast iron" is a generic term for a series of alloys as defined in Terminology A644 and includes gray iron as well as ductile iron. The castings shall be sound, true to pattern, and of compact close grain that permits drilling and cutting by ordinary methods. The interior surface shall be reasonably smooth and free from defects that would make the castings unfit for the use for which they are intended.

4.3 To minimize the possibility of introducing radioactive material to a melting operation, ferrous scrap, pig iron, and any recycled ferrous material shall be screened by the manufacturer for radioactivity with detection devices operated in accordance with the detection manufacturer's instructions. Written operating, calibration, and maintenance procedures for the detection equipment shall be provided to the purchaser for review when requested. Records shall be maintained by load of these tests for a period of seven years.

4.3.1 Only radiation devices designed specifically for the purpose of screening ferrous material shipments shall be used for the purpose of conforming to this requirement. Handheld radiation detectors (Geiger counters) are not appropriate and shall not be used for the purpose of conforming to this requirement.

4.3.2 Material that is found contaminated with radioactivity shall not be used to produce products covered by this specification.

4.3.3 Analysis of castings after the time of production shall not be used to determine compliance to this specification.

4.4 Foundries manufacturing products to this specification shall comply with all local, provincial, state, and national safety laws and regulations, and with the requirements of Practice E2349.

4.5 Pipe and fittings shall not be patched, filled, or welded by the manufacturer to repair cosmetic or material defects that occur during the course of manufacturing.

5. Mechanical Properties

5.1 *Mechanical Tests for Gray Iron*—The manufacturer shall perform tests to determine mechanical properties of the gray iron used in the manufacture of gray iron soil pipe and fittings. Tension test specimens shall be employed. The manufacturer shall maintain a record of mechanical tests for a minimum of seven years.

5.1.1 *Tensile Strength Test*—The tensile strength shall be not less than 21 000 psi (145 MPa).

5.1.2 Tension test reports shall include breaking load of test bars, machined diameter of test bars, and calculated tensile strength.

5.1.3 Analysis of castings or test bars after the time of production shall not be used as evidence of compliance to this specification.

6. Chemical Test for Gray Iron

6.1 The manufacturer shall perform tests to determine the significant chemical constituents of the gray iron used in the manufacture of gray iron soil pipe and fittings. Analysis shall be performed at the minimum of once per lot as defined in this specification. The manufacturer shall maintain a record of chemical tests performed for a minimum of seven years. The test results shall conform to the following requirements as to chemical composition:

Phosphorous (P)	0.38 % Maximum
Sulfur (S)	0.15 % Maximum
Chromium (Cr)	0.50 % Maximum
Titanium (Ti)	0.10 % Maximum
Aluminum (Al)	0.50 % Maximum
Lead (Pb)	0.015 % Maximum
Carbon Equivalent	4.10 % Minimum by mass

Note: Carbon equivalent for gray iron = %C+%Si/3+%P/3.

6.1.1 Chemical tests shall be performed at the time of production of the castings covered by this specification.

6.1.2 Analysis of castings after the time of production shall not be used as evidence of compliance to this specification.

7. Dimensions and Permissible Variations

7.1 *Pipe:*

7.1.1 *Ends of Pipe*—The end of pipe shall be cast with or without a spigot bead. The pipe shall be cast in one piece.

7.1.2 *Dimensions of Pipe*—Pipe shall be 10 ft (3 m) long or 5 ft (1.5 m) long with the dimensions and tolerances specified in Figs. 1 and 2. (The laying length of pipe is the same as actual length.)

7.1.3 *Straightness of Pipe*—Pipe shall be straight to the extent that for 10 ft (3 m) lengths, deflections in the barrel shall not exceed ⅝ in. (16 mm). For 5 ft (1.5 m) lengths, deflections in the barrel shall not exceed 5⁄16 in. (8 mm).

AVA Documents
Document Sharing Hub

Full document details: ASTM A888-24

7.2 *Fittings:*

7.2.1 *Dimensions of Fittings*—All fittings shall conform to the dimensions and tolerances specified in Figs. 1 and 2 as applicable. Fittings of the patterns specified in this specification shall conform to the applicable dimensions in Figs. 6–65, inclusive. Fittings not listed shall conform to Fig. 1 for wall thickness and dimension *R* for the minimum radius of any drain inlets that any such fittings provide.

7.2.2 All bends, sanitary tees, stack fittings, and special fittings that perform the function of a sanitary tee, designed for the conveyance of soil, waste, or both, affluent, shall have a radius not less than the following:

Nominal Size of Run or Branch (in.)	Minimum Radius
1½ –2	125 % of the smaller run or branch
3–4	100 % of the smaller run or branch
5–6	80 % of the smaller run or branch
8–10	70 % of the smaller run or branch
12–15	60 % of the smaller run or branch

7.2.3 *Ends of Fittings*—Ends shall have spigot beads as shown in Figs. 1 and 2. Positioning lugs are optional on all fittings. Positioning lugs on fittings when used by the manufacturer shall be cast as described in Fig. 2 or continuous around circumference of the fitting. It is permissible to increase the wall thickness on the inside surface of fitting ends. The increased thickness shall not reduce the minimum *B* dimension in Table 1 in excess of 0.06 in. and shall not extend more than 4¼ in. from the plain end. The increased thickness shall be tapered and shall offer no obstruction to flow.

7.2.4 *Pipe Threads*—Screw plugs and tapped openings in fittings shall have taper pipe threads in accordance with ANSI/ASME Standard B1.20.

7.2.5 Internal threads shall be chamfered at the entering end approximately to the major diameter of the thread, at an angle of approximately 45° with the axis of the thread for easy entrance in making a joint and for protection of the thread. The chamfer shall be concentric with the thread and shall be included in the measurement of the thread length.

8. Methods of Specifying Fittings

8.1 *Method of Specifying Sizes of Fittings of More Than One Size*—The sizes shall be designated by the order of listing, as follows:

TABLE 1 EDP Identification Numbers for Hubless Pipe

NOTE 1—When ordering by these EDP numbers, be sure to include the check (√) digit following the item number (022 0126 7). This check digit is verification of the group and item number you select.

Manufacturer's Item	Code			Description[A]
	Group	Item No.	√	
				10 ft (3 m) length
Hubless pipe (see Fig. 1)		0156	4	1½
		0158	0	2½
		0160	6	3
	022	0162	2	4
		0164	8	5
		0168	9	6
		0170	5	8
		0171	3	10
		0172	7	12
		0173	1	15

[A] EDP numbers for fittings will appear in each of the respective tables.

8.1.1 *Branch and Tapped Fittings:*

8.1.1.1 *Size of Run*—The run shall be that portion of the fitting that forms part of the main pipe line.

8.1.1.2 *Size of Branch:*

8.2 *Methods of Specifying Hand of Fittings with Side Inlets*—When placed in the position described below, if the side inlet appears on the right, it shall be a right-hand fitting; if on the left, it shall be a left-hand fitting.

8.2.1 *Branch Fittings*—The branch shall be placed toward the observer and the outlet end of the run lower than the branch.

8.3 The fitting illustrated in Fig. 3 has a right-hand inlet. Left-hand fittings have these openings on the side opposite to that shown. Inlets on fittings shall be made with or without spigot bead and positioning lug.

9. Coating

9.1 The pipe and fittings shall be uniformly coated with a material suitable for the purpose that is adherent and not brittle. The coating shall be applied in accordance with the coating manufacturer's requirements. External touch marks from points of contact during the coating process are permitted. The coating shall not contain asbestos above current SDS reportable levels.[9] Safety data sheets shall be furnished by the coating manufacturer when requested. The coating shall be evenly and smoothly applied to all surfaces, except in threaded openings, unless the coating is specifically designed for threaded openings.

9.2 Pipe and fittings coatings shall not contain lead which exceeds levels above 0.06 % (600 ppm).

9.2.1 The manufacturer shall annually prepare and submit samples to a qualified laboratory for test in accordance with Practice E1645. The manufacturer shall prepare and submit samples when changing sources of supply or the coating manufacturer changes formulations for the coating.

9.3 Pipe and fittings coatings shall not contain levels of volatile organic hazardous air pollutants (VOHAPs) which exceed levels of 2.6 lb (0.31 kg/L) of VOHAPs per gallon of solids in accordance with Practice D3960.

9.3.1 The manufacturer shall annually certify that the coating meets the VOHAP requirement. It is permissible for the coating manufacturer to provide the certification.

9.4 Records shall be maintained for a period of seven years.

9.5 Copies of the coating certification shall be furnished when requested.

10. Sampling

10.1 Chemical and mechanical tests shall be made regularly and at sufficiently close intervals for adequate determinations of the significant chemical constituents and properties of the cast iron. A specimen taken from a finished product often does not produce the same results as a specimen formed by the

[9] The Global Harmonized System of classification and labeling of chemicals sets the same rules for classifying hazards, and mandates the same format and content for labels and Safety Data Sheets for use around the world.

AVA Documents
Document Sharing Hub

Full document details: ASTM A888-24

method used for sample preparation and is not acceptable for the purposes of testing to this standard. Records of chemical analysis shall be maintained by the manufacturer. Copies of these analyses shall be furnished to the purchaser when requested.

10.2 A lot shall consist of all the metal poured for a given period of time between changes in charge, processing conditions, aim-for chemistry, or 4 hours, whichever is the shorter period.

11. Test Methods

11.1 *Gray Iron:*

11.1.1 *Tensile Strength Test*—Test bars shall be cast in accordance with the requirements of Specification A48/A48M. The machined test bar dimensions and drawing and dimensions of as-cast test bars are found in Fig. 4. The tensile strength shall be determined in accordance with Test Methods E8/E8M.

11.1.2 Tension test reports shall include breaking load of test bars, machined diameter of test bar, and calculated tensile strength.

12. Inspection

12.1 *Inspection and Test by the Manufacturer*—Pipe and fittings shall be inspected to verify compliance with this specification. The manufacturer shall maintain a record of all inspections.

12.2 *Pipe Inspection*—At regular intervals (not to exceed 12 h) during the course of production, sample pieces of each size of pipe or pipes being produced shall be selected randomly for inspection. Each pipe selected shall be measured by suitable gages and all dimensions detailed in Fig. 1 verified to comply with the requirements of this specification. The inspection records shall be maintained by the manufacturer for a period of seven years.

12.3 *Fitting Inspection*—At regular intervals (not to exceed 12 h) during the course of production, sample pieces of each size and configuration of fitting being produced shall be selected randomly for inspection. Each fitting selected shall be measured by suitable gages to verify that the laying length (as detailed in Figs. 4–65), and all applicable dimensions detailed in Figs. 1 and 2 comply with the requirements of this specification. The inspection records shall be maintained by the manufacturer for a period of seven years.

12.4 *Marking Inspection*—Inspection shall include verification that the markings on pipe and fittings comply with Section 14.

13. Certification

13.1 Upon request the purchaser, design professional, or the administrative authority having jurisdiction where the products are being installed shall be furnished certification by the manufacturer stating samples representing each lot have been tested and inspected as indicated in this specification and the requirements have been met. If required by the purchaser, design professional, or the administrative authority having jurisdiction where the products are being installed, certification shall be accompanied by test reports as prepared in accordance with Sections 11 and 12. Tension test reports shall include breaking load, machined diameters of test bars, and calculated tensile strength. Certification shall include legal name and address of the manufacturer.

13.2 Third-party certifiers or inspectors shall utilize the procedures detailed in Annex A1 when conducting inspections at the manufacturing locations.

14. Product Marking

14.1 Each length of pipe and each fitting shall be plainly marked with the country of origin and the manufacturer's name or manufacturer's registered trademark by which the manufacturer can be readily identified after installation. The marking shall be adequate identification of the manufacturer of the pipe and fittings if it readily identifies the manufacturer to the end user of the product. Other markings on pipes and fittings shall be permitted, provided such markings are not misleading with respect to the identification of the manufacturer by the end user.

14.1.1 *Pipe Markings*—The pipe shall be marked continuously on the barrel with a minimum of 0.75 in. (19 mm) lettering starting within 3 in. of each end of the pipe. Each pipe shall be marked with the date of manufacture. The marking shall be stenciled on the pipe or otherwise applied so as to be clear and legible.

14.1.2 On fittings, the marking shall be cast with raised letters that are not to be located within the *W* dimension, as shown in Fig. 2. Cast markings shall be raised from the wall of the fitting unless otherwise noted.

15. Packaging and Package Marking

15.1 *Government Procurement*—Unless otherwise specified in the contract, the material shall be packaged in accordance with the supplier's standard practice, which will be acceptable to the carrier at lowest rates. Containers and packing shall comply with Uniform Freight Classification Rules or National Motor Freight Classification Rules. Marking for shipment of such material shall be in accordance with Fed. Std. No. 123 for civil agencies and MIL-STD-129 for military agencies.

16. Keywords

16.1 cast iron; hubless pipe and fittings; no-hub pipe and fittings; soil pipe

AVA Documents
Document Sharing Hub

Full document details: ASTM A888-24

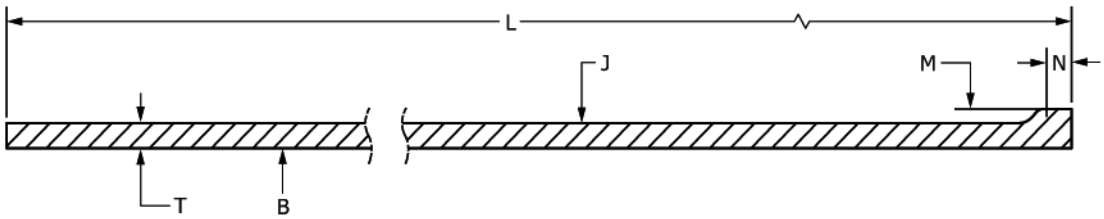

Size	Barrel		Spigot		Barrel Thickness, T		Gasket Positioning Lug[A]	Laying Length, L[B]
	Inside Diameter	Outside Diameter	Outside Diameter	Bead Width[A]				
	B	J	M	N, ±0.13 (3.3)	Nominal	Minimum	W	10 ft ± 0.50 in. (3.0480 m ± 13 mm)
1½	1.50 ± 0.09 (38.1 ± 2.29)	1.90 ± 0.06 (48.26 ± 1.52)	1.96 ± 0.06 (49.78 ± 1.52)	0.25 (6.35)	0.16	0.13 (3.3)	1.13 (28.7)	120 (3048)
2	1.96 ± 0.09 (49.8 ± 2.29)	2.35 ± 0.09 (59.69 ± 2.29)	2.41 ± 0.09 (61.21 ± 2.29)	0.25 (6.35)	0.16	0.13 (3.3)	1.13 (28.7)	120 (3048)
3	2.96 ± 0.09 (75.2 ± 2.29)	3.35 ± 0.09 (85.09 ± 2.29)	3.41 ± 0.09 (86.61 ± 2.29)	0.25 (6.35)	0.16	0.13 (3.3)	1.13 (28.7)	120 (3048)
4	3.94 ± 0.09 (100.08 ± 2.29)	4.38 + 0.09 −0.05 (111.25 + 2.29) (−1.27)	4.44 ± 0.09 (112.78 ± 2.29)	0.31 (7.87)	0.19	0.15 (3.81)	1.13 (28.7)	120 (3048)
5	4.94 ± 0.09 (125.48 ± 2.29)	5.30 + 0.09 −0.05 (134.62 + 2.29) (−1.27)	5.36 ± 0.09 (136.14 ± 2.29)	0.31 (7.87)	0.19	0.15 (3.81)	1.50 (38.1)	120 (3048)
6	5.94 ± 0.09 (150.88 ± 2.29)	6.30 + 0.09 −0.05 (160.02 + 2.29) (−1.27)	6.36 ± 0.09 (161.54 ± 2.29)	0.31 (7.87)	0.19	0.15 (3.81)	1.50 (38.1)	120 (3048)
8	7.94 ± 0.13 (201.68 ± 3.3)	8.38 + 0.09 −0.09 (212.85 + 3.3) (−2.29)	8.44 ± 0.09 (214.38 ± 2.29)	0.31 (7.87)	0.23	0.17 (4.32)	2.00 (50.8)	120 (3048)
10	10.00 ± 0.13 (254 ± 3.3)	10.56 ± 0.09 (268.22 ± 2.29)	10.62 ± 0.09 (269.75 ± 2.29)	0.31 (7.87)	0.28	0.22 (5.59)	2.00 (50.8)	120 (3048)
12	11.94 ± 0.13 (303.28 ± 3.3)	12.50 ± 0.13 (317.5 ± 3.3)	12.62 ± 0.13 (320.55 ± 3.3)	0.31 (7.87)	0.28	0.22 (5.59)	2.75 (69.85)	120 (3048)
15	15.11 ± 0.13 (383.79 ± 3.3)	15.83 ± 0.13 (402.08 ± 3.3)	16.12 ± 0.13 (409.45 ± 3.3)	0.31 (7.87)	0.36	0.30 (7.62)	2.75 (69.85)	120 (3048)

[A] See Fig. 2 for details of the spigot and gasket positioning lug.
[B] Laying lengths as listed in Fig. 1 shall be for pipe only, and such pipe shall be 10 ft (3 m) long. Laying length for fittings are listed in the applicable tables.

FIG. 1 Dimensions and Tolerances in Inches (Millimetres) of Spigots and Barrels for Hubless Pipe and Fittings

AVA Documents
Document Sharing Hub

Full document details: ASTM A888-24

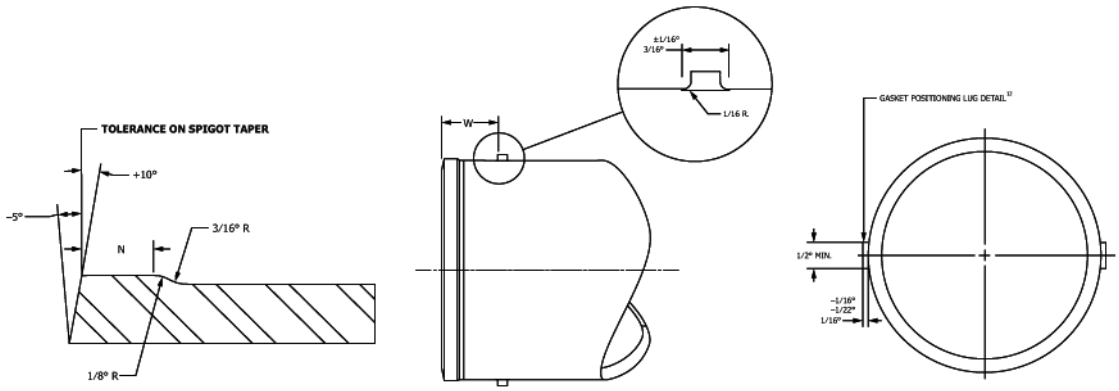

NOTE 1—Pipe shall be cast with or without the gasket positioning lugs. These lugs, as illustrated above, shall be cast as illustrated or be continuous around the entire circumference.

NOTE 2—Gasket positioning lugs are optional on all fittings. When the manufacturer chooses to include gasket positioning lugs, they shall be cast as illustrated or be continuous around the entire circumference.

Size, in.	Spigot Detail, N in. (mm) ±0.13 (3.3)	Gasket Lug Location, W in. (mm) ±0.13 (3.3)
1½	0.25 (6)	1.13 (29)
2	0.25 (6)	1.13 (29)
3	0.25 (6)	1.13 (29)
4	0.31 (8)	1.13 (29)
5	0.31 (8)	1.50 (38)
6	0.31 (8)	1.50 (38)
8	0.31 (8)	2.00 (51)
10	0.31 (8)	2.00 (51)
12	0.31 (8)	2.75 (70)
15	0.31 (8)	2.75 (70)

FIG. 2 Details of Spigot Bead and Gasket Positioning Lug

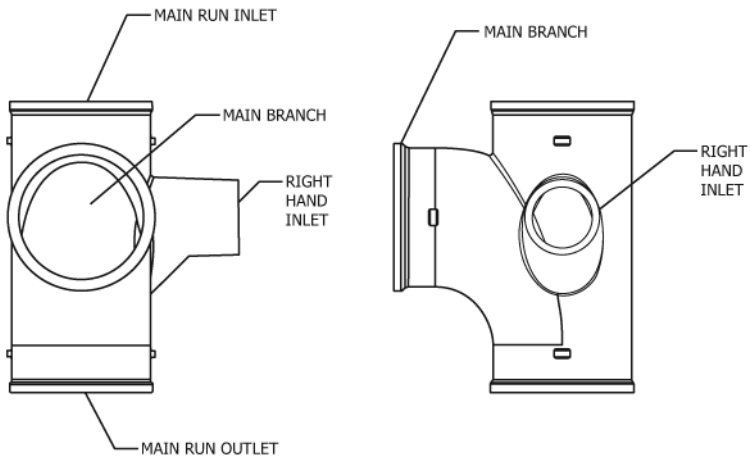

FIG. 3 Specifying Hand of Fittings with Side Inlets or Outlets

Documents
Document Sharing Hub
Full document details: ASTM A888-24

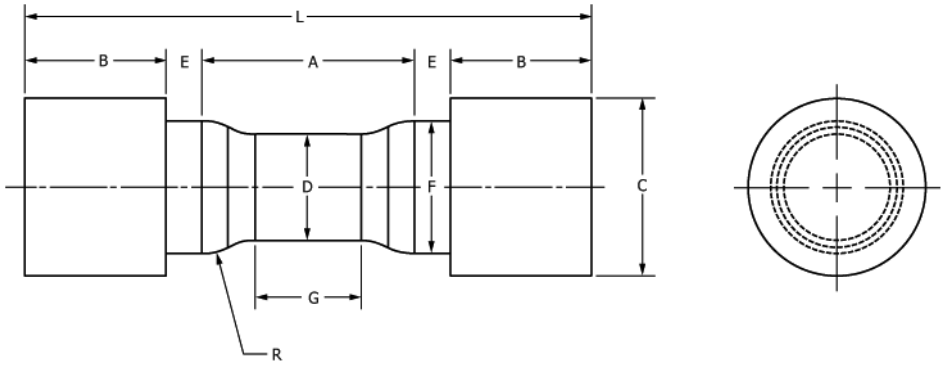

Dimensions, in (mm)	Tension Test Specimen B
G—Length of parallel, min	0.75 (19)
D—Diameter	0.750 ± 0.015 (19.0 ± 0.38)
R—Radius of fillet, min	1 (25)
A—Length of reduced section, min	1½ (38)
L—Overall length, min	4 (100)
C—Diameter of end section, approx	1¼ (32)
E—Length of shoulder, min	¼ (6)
F—Diameter of shoulder	15⁄16 ± 1⁄64 (25 ± 0.4) [A]
B—Length of end section	

	As-Cast Diameter, in. (mm)				Length, in. (mm)
Test Bar	Nominal (Mid-Length)	Minimum (Bottom)	Maximum (Top)	Minimum (Specified)	Maximum (Recommended)
B	1.20 (30.5)	1.14 (29.0)	1.32 (33.5)	6.0 (150)	9.0 (230)

[A] Optional to fit holders on testing machine. If threaded, root diameter shall not be less than dimension F.

FIG. 4 Sample Test Bar

Documents
Document Sharing Hub
Full document details: ASTM A888-24

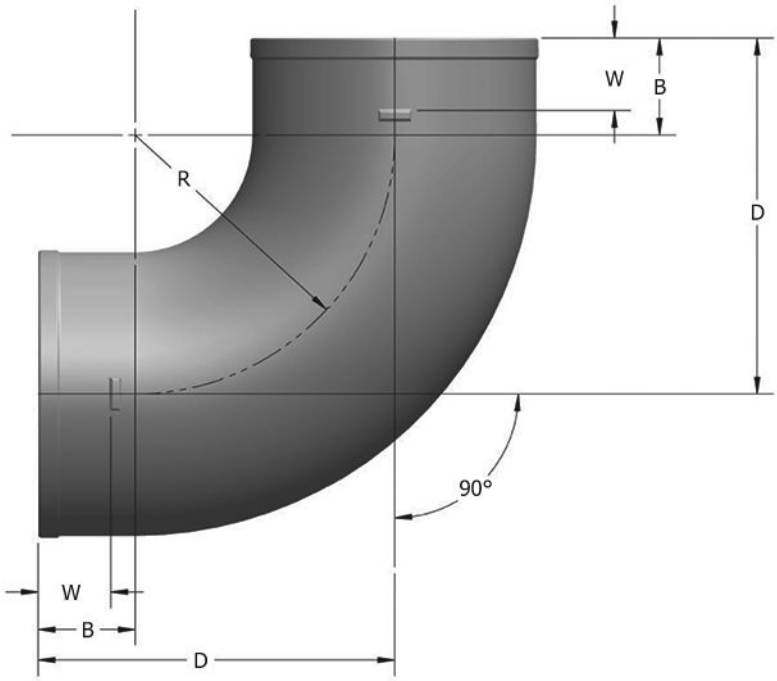

ASA Code Group 022		Size, in.	Dimensions, in. (mm)[A]			
Item No.	√		B	D[B] ±⅛ (3.2)	R	W
0188	7	1½	1½ (38)	4¼ (108)	2¾ (70)	1⅛ (29)
0190	3	2	1½ (38)	4½ (114)	3 (76)	1⅛ (29)
0192	9	3	1½ (38)	5 (127)	3½ (89)	1⅛ (29)
0194	5	4	1½ (38)	5½ (140)	4 (102)	1⅛ (29)
0196	0	5	2 (51)	6½ (165)	4½ (114)	1½ (38)
0198	6	6	2 (51)	7 (178)	5 (127)	1½ (38)
0200	0	8	2½ (64)	8½ (216)	6 (152)	2 (51)

[A] For details of barrel, spigot, and gasket positioning lug, see Figs. 1 and 2.
[B] Dimension D is laying length.

FIG. 5 ¼ Bend (Corresponds to Table 5 of CISPI Specification 301)

AVA Documents
Document Sharing Hub

Full document details: ASTM A888-24

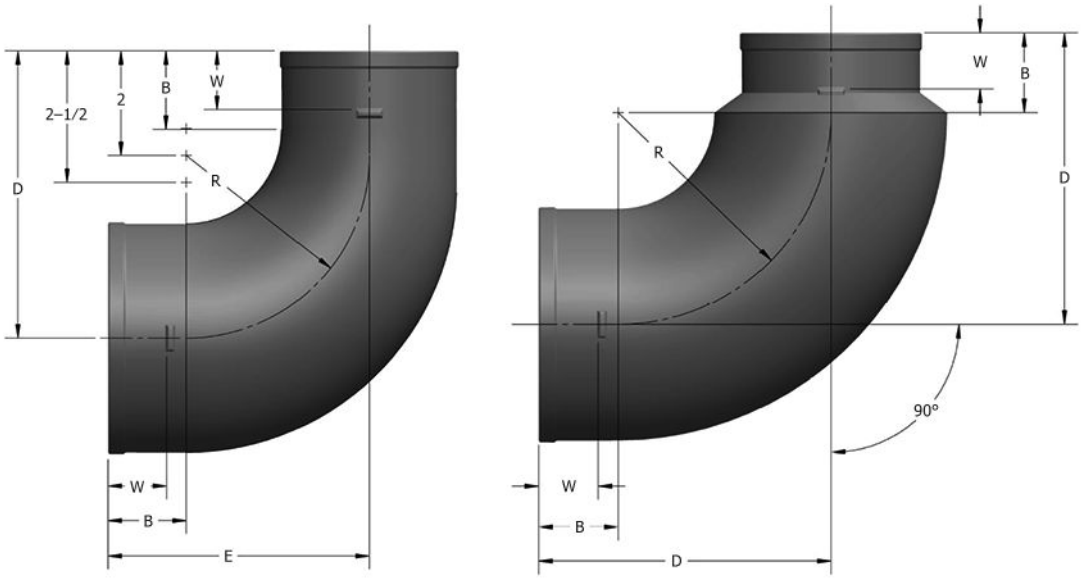

ASA Code Group 022				Dimensions, in. (mm)[A]				
	Item No.	√	Sizes, in.	B	R	D[B] ±⅛ (3.2)	E[B] ±⅛ (3.2)	W
Fig. (a)	0218	2	4 by 3	1½ (38)	3½ (89)	5½ (140)	5 (127)	1⅛ (29)
Fig. (b)	0218	2	4 by 3	1½ (38)	4 (102)	5½ (140)	...	1⅛ (29)

[A] For details of barrel, spigot, and gasket positioning lug, see Figs. 1 and 2.
[B] Dimensions D and E are laying lengths.

FIG. 6 Reducing ¼ Bend (Corresponds to Tables 6 and 7 of CISPI Specification 301)

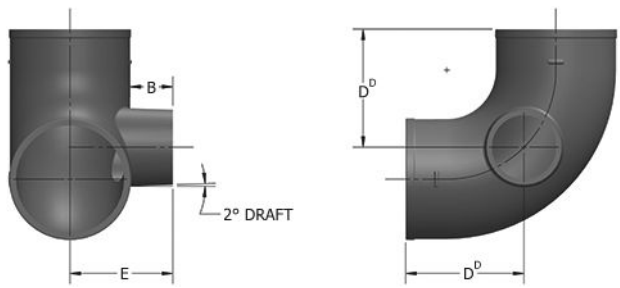

NOTE 1—For details of ¼ bend, see Fig. 5.

NOTE 2—Inclusion of spigot bead is optional with manufacturer based on casting method used.

ASA Code Group 022			Dimensions, in. (mm)[A]		
Item No.	√	Sizes, in.	B	E[B] ±⅛ (3.2)	D[B]
0236	4	3 by 2	1½ (38)	3¼ (83)	4 (102)
0238	0	4 by 2	1½ (38)	3¾ (95)	4⁵⁄₁₆ (110)

[A] For details of barrel, spigot, and gasket positioning lug, see Figs. 1 and 2.
[B] Dimension E is laying length.

FIG. 7 ¼ Bend with Side Opening (Corresponds to Table 8 of CISPI Specification 301)

AVA Documents
Document Sharing Hub

Full document details: ASTM A888-24

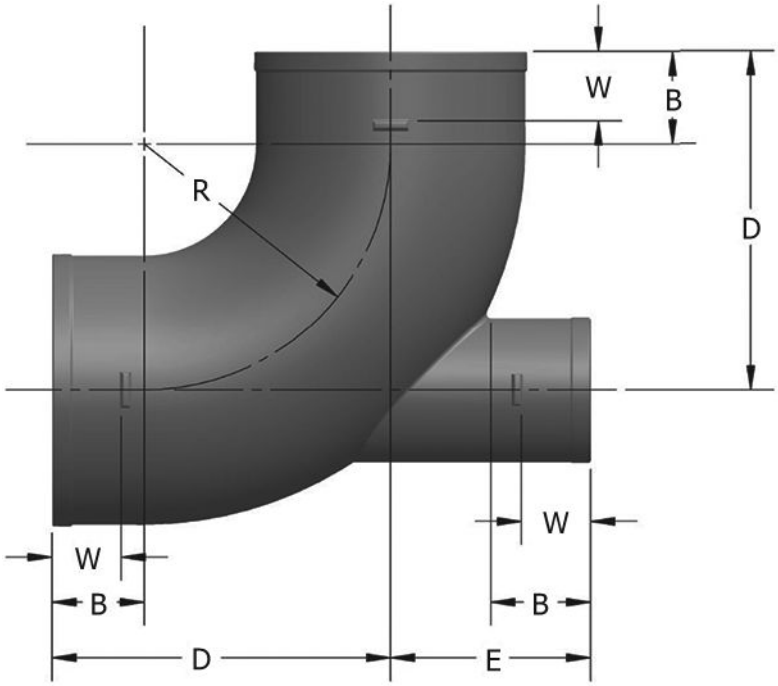

ASA Code Group 022			Dimensions, in. (mm)[A]				
Item No.	√	Size, in.	B	D[B] ±⅛ (3.2)	E[B] ±⅛ (3.2)	R	W
0280	2	3 by 2	1½ (38)	5 (127)	2⅞ (73)	3½ (89)	1⅛ (29)
0275	2	3 by 2	1½ (38)	5 (127)	10½ (267)	3½ (89)	1⅛ (29)
0282	8	4 by 2	1½ (38)	5½ (140)	3¼ (83)	4 (102)	1⅛ (29)

[A] For details of barrel, spigot, and gasket positioning lug, see Figs. 1 and 2.
[B] Dimensions D and E are laying lengths.

FIG. 8 ¼ Bend with Heel Opening (Corresponds to Table 9 of CISPI Specification 301)

Documents
Document Sharing Hub
Full document details: ASTM A888-24

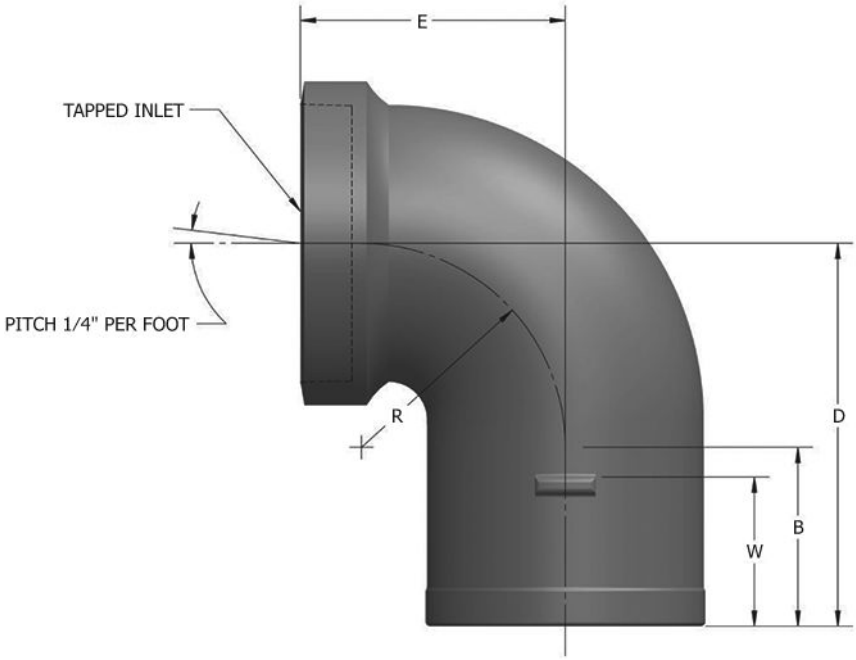

ASA Code Group 022			Dimensions, in. (mm)[A]					
Item No.	√	Size, in.	B	E	D[B] ±⅛ (3.2)	R	IPS Tapping[C]	W
0324	8	1½ by 1¼	1½ (38)	2 (51)	3 (76)	1¾ (44)	1¼ (32)	1⅛ (29)
0326	3	1½ by 1½	1½ (38)	2 (51)	3 (76)	1¾ (44)	1½ (38)	1⅛ (29)
0328	9	2 by 1¼	1½ (38)	2¼ (57)	3¼ (83)	1¾ (44)	1¼ (32)	1⅛ (29)
0330	5	2 by 1½	1½ (38)	2¼ (57)	3¼ (83)	1¾ (44)	1½ (38)	1⅛ (29)
		2 by 2	1½ (38)	2¼ (57)	3¼ (83)	1¾ (44)	2 (51)	1⅛ (29)

[A] For details of barrel, spigot, and gasket positioning lug, see Figs. 1 and 2.
[B] Dimension D is laying length.
[C] For details of tapping bosses, see Fig. 58.

FIG. 9 Tapped ¼ Bend (Corresponds to Table 11 of CISPI Specification 301)

Documents
Document Sharing Hub
Full document details: ASTM A888-24

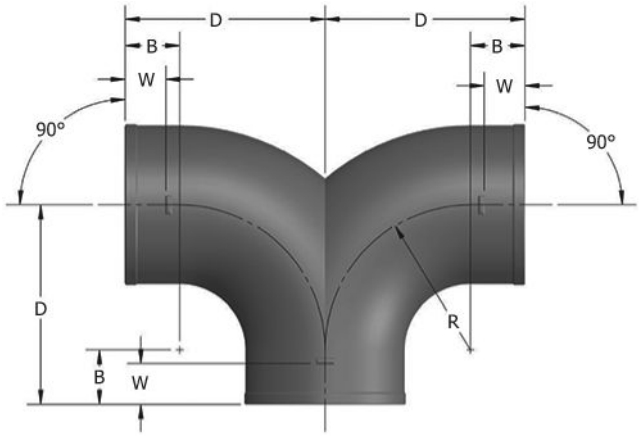

ASA Code Group 022			Dimensions, in. (mm)[A]			
Item No.	√	Size, in.	D[B] ±⅛ (3.2)	R	B	W
0402	2	2	4½ (114)	3 (76)	1½ (38)	1⅛ (29)
0404	8	3	5 (127)	3½ (89)	1½ (38)	1⅛ (29)
0406	3	4	5½ (140)	4 (102)	1½ (38)	1⅛ (29)

[A] For details of barrel, spigot, and gasket positioning lug, see Figs. 1 and 2.
[B] Dimension D is laying length.

FIG. 10 Double ¼ Bend (Corresponds to Table 13 of CISPI Specification 301)

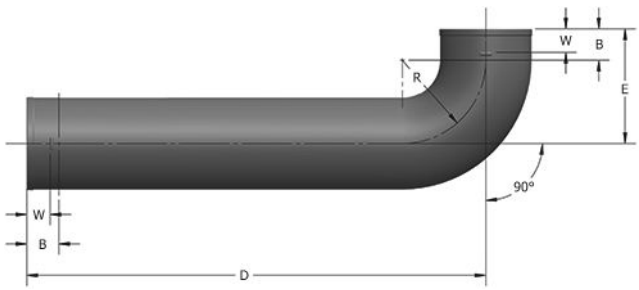

ASA Code Group 022		Size, in.	Dimensions, in. (mm)[A]				
Item No.	√		B	E[B] ±⅛ (3.2)	D[B] ±⅛ (3.2)	R	W
0424	6	2 by 12	1½ (38)	4½ (114)	12 (305)	3 (76)	1⅛ (29)
		2 by 14	1½ (38)	4½ (114)	14 (356)	3 (76)	1⅛ (29)
0423	8	2 by 16	1½ (38)	4½ (114)	16 (406)	3 (76)	1⅛ (29)
0425	3	2 by 18	1½ (38)	4½ (114)	18 (457)	3 (76)	1⅛ (29)
		2 by 24	1½ (38)	4½ (114)	24 (610)	3 (76)	1⅛ (29)
0426	1	3 by 12	1½ (38)	5 (127)	12 (305)	3½ (89)	1⅛ (29)
0427	9	3 by 18	1½ (38)	5 (127)	18 (457)	3½ (89)	1⅛ (29)
0428	7	4 by 12	1½ (38)	5½ (140)	12 (305)	4 (102)	1⅛ (29)
0431	1	4 by 18	1½ (38)	5½ (140)	18 (457)	4 (102)	1⅛ (29)

[A] For details of barrel, spigot, and gasket positioning lug, see Figs. 1 and 2.
[B] Dimensions D and E are laying lengths.

FIG. 11 Long ¼ Bend (Corresponds to Table 14 of CISPI Specification 301)

AVA Documents
Document Sharing Hub

Full document details: ASTM A888-24

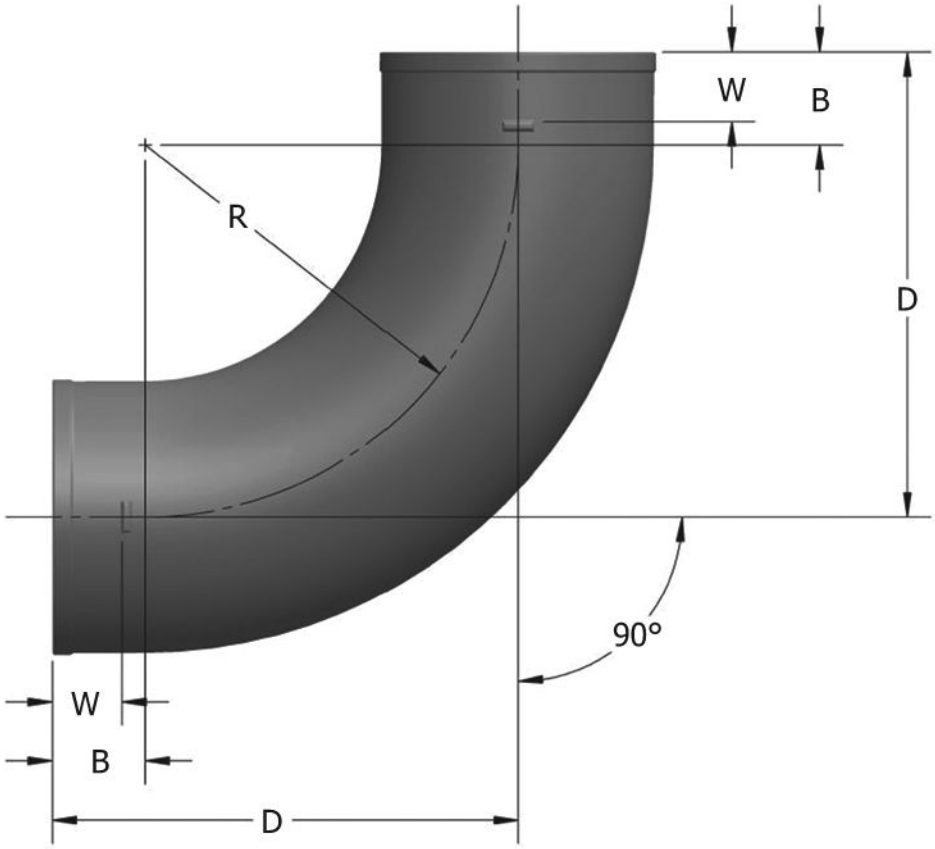

ASA Code Group 022		Size, in.	Dimensions, in. (mm)[A]			
Item No.	√		B	D[B] ±⅛ (3.2)	R	W
0462	6	2	1½ (38)	6½ (165)	5 (127)	1⅛ (29)
0464	2	3	1½ (38)	7 (178)	5½ (140)	1⅛ (29)
0468	3	4	1½ (38)	7½ (191)	6 (152)	1⅛ (29)
0470	9	5	2 (51)	8½ (216)	6½ (165)	1½ (38)
0472	5	6	2 (51)	9 (229)	7 (178)	1½ (38)
0474	1	8	2½ (64)	10½ (267)	8 (203)	2 (51)
0475	8	10	3 (76)	12 (305)	9 (229)	2 (51)
0476	8	12	3¼ (83)	13¼ (337)	10 (254)	2¾ (70)
0477	8	15	3¼ (83)	14¾ (375)	11½ (292)	2¾ (70)

ASA Code Group 022		Size, in.	Extended Pattern Dimensions, in. (mm)[A]				
Item No.	√		B	D[B] ±⅛ (3.2)	E[B] ±⅛ (3.2)	R	W
0478	7	2 by 12	1½ [38]	6½ [165]	12 [305]	5 [127]	1⅛ [29]
0479	7	2 by 14	1½ [38]	6½ [165]	14 [356]	5 [127]	1⅛ [29]
0480	7	2 by 16	1½ [38]	6½ [165]	16 [406]	5 [127]	1⅛ [29]
0481	7	2 by 18	1½ [38]	6½ [165]	18 [457]	5 [127]	1⅛ [29]
0482	7	2 by 24	1½ [38]	6½ [165]	24 [610]	5 [127]	1⅛ [29]
0483	7	2 by 34	1½ [38]	6½ [165]	34 [864]	5 [127]	1⅛ [29]

Note: Dimensions D and E are laying lengths on extended pattern fittings.

[A] For details of barrel, spigot, and gasket positioning lug, see Figs. 1 and 2.
[B] Dimension D is laying length.

FIG. 12 Short Sweep (Corresponds to Table 15 of CISPI Specification 301)

AVA Documents
Document Sharing Hub

Full document details: ASTM A888-24

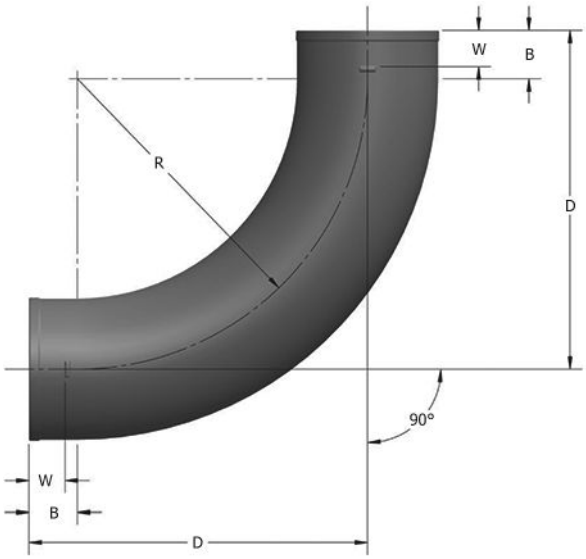

ASA Code Group 022		Size, in.	Dimensions, in. (mm)[A]			
Item No.	√		B	D[B] ±⅛ (3.2)	R	W
0492	3	1½	1½ (38)	9¼ (235)	7¾ (197)	1⅛ (29)
0494	9	2	1½ (38)	9½ (241)	8 (203)	1⅛ (29)
0496	4	3	1½ (38)	10 (254)	8½ (216)	1⅛ (29)
0498	0	4	1½ (38)	10½ (267)	9 (229)	1⅛ (29)
0500	3	5	2 (51)	11½ (292)	9½ (241)	1½ (38)
0502	9	6	2 (51)	12 (305)	10 (254)	1½ (38)

[A] For details of barrel, spigot, and gasket positioning lug, see Figs. 1 and 2.
[B] Dimension D is laying length.

FIG. 13 Long Sweep (Corresponds to Table 17 of CISPI Specification 301)

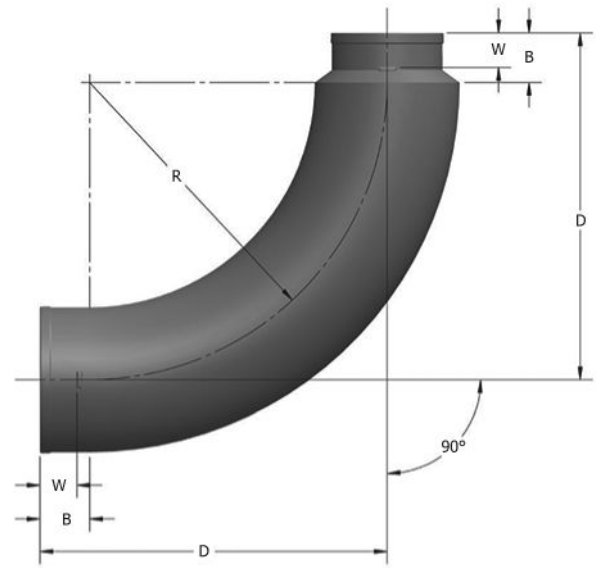

ASA Code Group 022		Size, in.	Dimensions, in. (mm)[A]			
Item No.	√		B	D[B] ±⅛ (3.2)	R	W
0518	5	4 by 3	1½ (38)	10½ (267)	9 (229)	1⅛ (29)

[A] For details of barrel, spigot, and gasket positioning lug, see Figs. 1 and 2.
[B] Dimension D is laying length.

FIG. 14 Reducing Long Sweep (Corresponds to Table 18 of CISPI Specification 301)

Documents
Document Sharing Hub
Full document details: ASTM A888-24

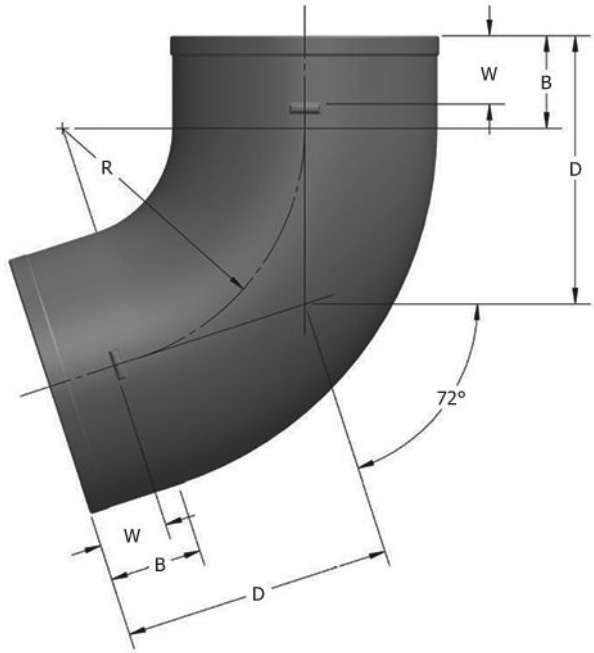

ASA Code Group 022			Dimensions, in. (mm)[A]			
Item No.	√	Size, in.	B	D[B] ±⅛ (3.2)	R	W
0536	7	2	1½ (38)	3 11/16 (94)	3 (76)	1⅛ (29)
0538	3	3	1½ (38)	4 1/16 (103)	3½ (89)	1⅛ (29)
0540	9	4	1½ (38)	4 7/16 (113)	4 (102)	1⅛ (29)

[A] For details of barrel, spigot, and gasket positioning lug, see Figs. 1 and 2.
[B] Dimension D is laying length.

FIG. 15 ⅕ Bend (Corresponds to Table 19 of CISPI Specification 301)

Documents
Document Sharing Hub
Full document details: ASTM A888-24

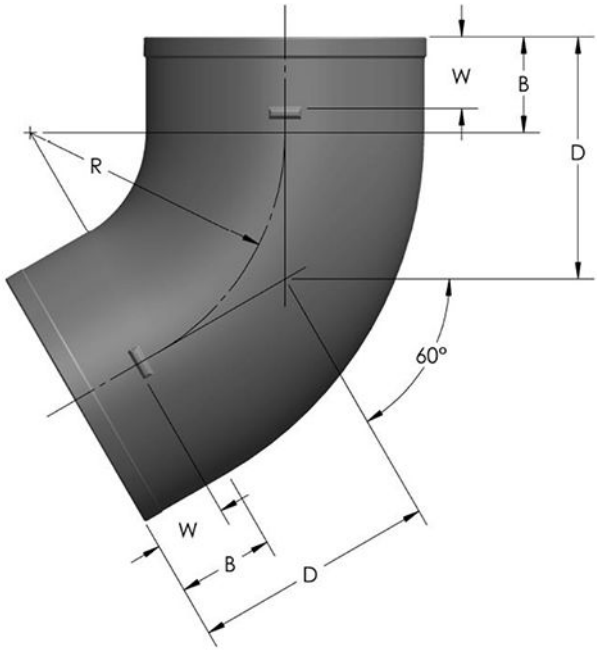

ASA Code Group 022			Dimensions, in. (mm)[A]			
Item No.	√	Size, in.	B	D[B] ±⅛ (3.2)	R	W
0570	6	2	1½ (38)	3¼ (83)	3 (76)	1⅛ (29)
0572	2	3	1½ (38)	3½ (89)	3½ (89)	1⅛ (29)
0574	8	4	1½ (38)	3 13/16 (97)	4 (102)	1⅛ (29)

[A] For details of barrel, spigot, and gasket positioning lug, see Figs. 1 and 2.
[B] Dimension D is laying length.

FIG. 16 ⅛ Bend (Corresponds to Table 20 of CISPI Specification 301)

Documents
Document Sharing Hub
Full document details: ASTM A888-24

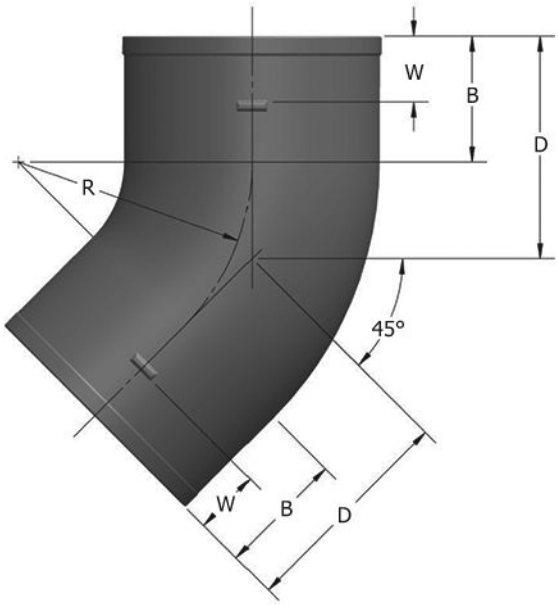

ASA Code Group 022		Size, in.	Dimensions, in. (mm)[A]			
Item No.	√		B	D[B] ±⅛ (3.2)	R	W
0604	3	1½	1½ (38)	2⅝ (67)	2¾ (70)	1⅛ (29)
0606	8	2	1½ (38)	2¾ (70)	3 (76)	1⅛ (29)
0608	4	3	1½ (38)	3 (76)	3½ (89)	1⅛ (29)
0610	0	4	1½ (38)	3⅛ (79)	4 (102)	1⅛ (29)
0612	6	5	2 (51)	3⅞ (98)	4½ (114)	1½ (38)
0614	2	6	2 (51)	4 1/16 (103)	5 (127)	1½ (38)
0616	7	8	2½ (64)	5 (127)	6 (152)	2 (51)
0617	5	10	3 (76)	5 15/16 (151)	7 (178)	2 (51)
0618	5	12	3 ¼ (83)	6 9/16 (167)	8 (203)	2 ¾ (70)
0619	5	15	3 ¼ (83)	7 3/16 (183)	9 ½ (241)	2 ¾ (70)

[A] For details of barrel, spigot, and gasket positioning lug, see Figs. 1 and 2.
[B] Dimension D is laying length.

FIG. 17 ⅛ Bend (Corresponds to Table 21 of CISPI Specification 301)

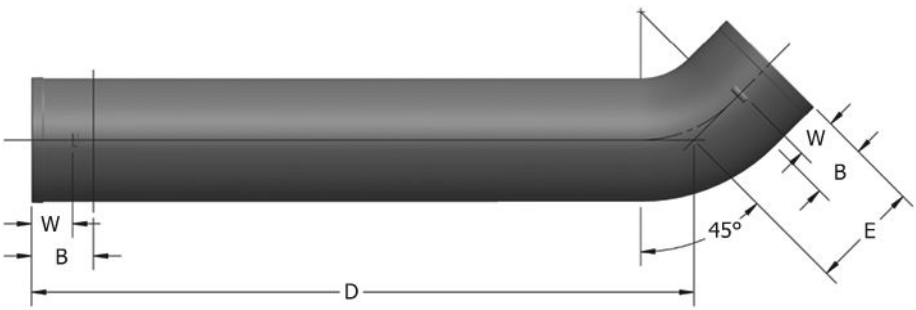

ASA Code Group 022		Size, in.	Dimensions, in. (mm)[A]				
Item No.	√		B	E[B] ±⅛ (3.2)	D[B] ±⅛ (3.2)	R	W
0638	1	2 by 6	1½ (38)	2¾ (70)	6 (152)	3 (76)	1⅛ (29)
		2 by 12	1½ (38)	2¾ (70)	12 (305)	3 (76)	1⅛ (29)
		2 by 14	1½ (38)	2¾ (70)	14 (356)	3 (76)	1⅛ (29)
0641	5	2 by 16	1½ (38)	2¾ (70)	16 (406)	3 (76)	1⅛ (29)
0643	1	2 by 18	1½ (38)	2¾ (70)	18 (457)	3 (76)	1⅛ (29)
0640	7	3 by 12	1½ (38)	3 (76)	12 (305)	3½ (89)	1⅛ (29)
0644	9	3 by 18	1½ (38)	3 (76)	18 (457)	3½ (89)	1⅛ (29)
0642	3	4 by 12	1½ (38)	3⅛ (79)	12 (305)	4 (102)	1⅛ (29)

[A] For details of barrel, spigot, and gasket positioning lug, see Figs. 1 and 2.
[B] Dimensions D and E are laying lengths.

FIG. 18 Long ⅛ Bend (Corresponds to Table 22 of CISPI Specification 301)

Documents
Document Sharing Hub

Full document details: ASTM A888-24

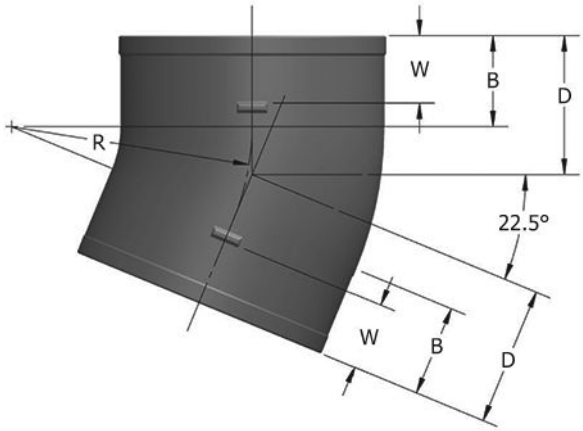

ASA Code Group 022		Size, in.	Dimensions, in. (mm)[A]			
Item No.	√		B	D[B] ±⅛ (3.2)	R	W
0676	1	1½	1½ (38)	2⅛ (54)	2¾ (70)	1⅛ (29)
0678	7	2	1½ (38)	2⅛ (53)	3 (76)	1⅛ (29)
0680	3	3	1½ (38)	2¼ (55)	3½ (89)	1⅛ (29)
0682	9	4	1½ (38)	2⁵⁄₁₆ (58)	4 (102)	1⅛ (29)
0684	5	5	2 (51)	2⅞ (73)	4½ (114)	1½ (38)
0686	0	6	2 (51)	3 (76)	5 (127)	1½ (38)
0688	6	8	2½ (64)	3¾ (95)	6 (152)	2 (51)

[A] For details of barrel, spigot, and gasket positioning lug, see Figs. 1 and 2.
[B] Dimension D is laying length.

FIG. 19 ¹⁄₁₆ Bend (Corresponds to Table 23 of CISPI Specification 301)

Documents
Document Sharing Hub
Full document details: ASTM A888-24