NOTICE: This standard has either been superseded and replaced by a new version or withdrawn.
Contact ASTM International (www.astm.org) for the latest information

Designation: A955/A955M – 14

StandardSpecification for Deformed and Plain Stainless-Steel Bars for Concrete Reinforcement[1]

This standard is issued under the fixed designation A955/A955M; the number immediately following the designation indicates the year of original adoption or, in the case of revision, the year of last revision. A number in parentheses indicates the year of last reapproval. A superscript epsilon (ε) indicates an editorial change since the last revision or reapproval.

1. Scope*

1.1 This specification covers deformed and plain stainless-steel bars for concrete reinforcement in cut lengths and coils used in applications requiring resistance to corrosion or controlled magnetic permeability. The standard sizes and dimensions of deformed bars and their numerical designation shall be those listed in Table 1. The text of this specification references notes and footnotes which provide explanatory material. These notes and footnotes (excluding those in tables and figures) shall not be considered as requirements of the specification.

1.1.1 Supplementary requirement (S1) of an optional nature is provided. It shall apply only when specified by the purchaser. In order to obtain a controlled magnetic permeability product, steel conforming to Supplementary Requirement S1 should be ordered.

1.2 The chemical composition of the stainless steel alloy shall be selected for suitability to the application involved by agreement between the manufacturer and the purchaser. This is an important consideration in achieving the desired corrosion resistance or controlled magnetic permeability, or both, because these properties are not provided by all stainless steels.

NOTE 1—The alloys shown in Table 2 have found the most use in North America. Other alloys may also provide desired properties; consult with the manufacturer for stainless steel alloy properties and availability.

1.3 Requirements for the relative deformation area of three-sided deformed bars are contained in Annex A4.

1.4 Bars are of two minimum yield strength levels, namely, 60 000 [420 MPa] and 75 000 psi [520 MPa], designated as Grade 60 [420] and Grade 75 [520], respectively.

1.5 Plain bars in sizes up to and including 2 in. [50.8 mm] in diameter in coils or cut lengths, when ordered, shall be furnished under this specification in Grade 60 [420] and Grade 75 [520], respectively. Bending properties, when required, shall be by agreement between the manufacturer and purchaser. Requirements providing for deformations and marking shall not be applicable to plain bars.

1.6 Weldability of most stainless steel compositions is generally good, however, pre-weld or post-weld procedures, or both, are necessary. Where material is to be welded, a welding procedure suitable for the chemical composition and intended use or service shall be used. Retesting of physical properties should be considered following welding procedures depending upon the steel composition and welding operation involved.

NOTE 2—It is recommended that the user consult the manufacturer for information available from the Nickel Development Institute (NIDI) (Toronto, Canada).

1.7 This specification is applicable for orders in either inch-pound units (as Specification A955) or in SI units (as Specification A955M).

1.8 The values stated in either inch-pound or SI units are to be regarded separately as standard. Within the text, the SI units are shown in brackets. The values stated in each system are not exact equivalents; therefore, each system shall be used independently of the other. Combining values from the two systems may result in nonconformance with the standard.

1.9 *This standard does not purport to address all of the safety concerns, if any, associated with its use. It is the responsibility of the user of this standard to establish appropriate safety and health practices and determine the applicability of regulatory limitations prior to use.*

2. Referenced Documents

2.1 *ASTM Standards:*[2]

A6/A6M Specification for General Requirements for Rolled Structural Steel Bars, Plates, Shapes, and Sheet Piling
A276 Specification for Stainless Steel Bars and Shapes
A342/A342M Test Methods for Permeability of Weakly Magnetic Materials
A370 Test Methods and Definitions for Mechanical Testing of Steel Products

[1] This specification is under the jurisdiction of ASTM Committee A01 on Steel, Stainless Steel and Related Alloys and is the direct responsibility of Subcommittee A01.05 on Steel Reinforcement.

Current edition approved March 1, 2014. Published March 2014. Originally approved in 1996. Last previous edition approved in 2012 as A955/A955M – 12ε1. DOI: 10.1520/A0955_A0955M-14.

[2] For referenced ASTM standards, visit the ASTM website, www.astm.org, or contact ASTM Customer Service at service@astm.org. For *Annual Book of ASTM Standards* volume information, refer to the standard's Document Summary page on the ASTM website.

*A Summary of Changes section appears at the end of this standard

Copyright © ASTM International, 100 Barr Harbor Drive, PO Box C700, West Conshohocken, PA 19428-2959. United States

Documents
Document Sharing Hub
Full document details: ASTM A955/A955M-14

TABLE 1 Deformed Bar Designation Numbers, Nominal Weights [Masses], Nominal Dimensions, and Deformation Requirements

Bar Designation No.	Nominal Weight, lb/ft [Nominal Mass, kg/m][A]		Nominal Dimensions[B]			Deformation Requirements, in. [mm]			
	400 Series; Duplex Alloys	300 Series	Diameter, in. [mm]	Cross-Sectional Area, in.^{2} [mm^2]	Perimeter, in. [mm]	Maximum Average Spacing	Minimum Average Height	Maximum Gap per Side[C]	
								Two-Sided Bar	Three-Sided Bar
3 [10]	0.374 [0.556]	0.378 [0.562]	0.375 [9.5]	0.11 [71]	1.178 [29.9]	0.262 [6.7]	0.015 [0.38]	0.143 [3.6]	0.097 [2.5]
4 [13]	0.679 [1.011]	0.686 [1.021]	0.500 [12.7]	0.20 [129]	1.571 [39.9]	0.350 [8.9]	0.020 [0.51]	0.191 [4.9]	0.129 [3.3]
5 [16]	1.048 [1.559]	1.058 [1.575]	0.625 [15.9]	0.31 [199]	1.963 [49.9]	0.437 [11.1]	0.028 [0.71]	0.239 [6.1]	0.162 [4.1]
6 [19]	1.495 [2.225]	1.511 [2.248]	0.750 [19.1]	0.44 [284]	2.356 [59.8]	0.525 [13.3]	0.038 [0.97]	0.286 [7.3]	0.194 [4.9]
7 [22]	2.038 [3.032]	2.059 [3.064]	0.875 [22.2]	0.60 [367]	2.749 [69.8]	0.612 [15.5]	0.044 [1.12]	0.334 [8.5]	0.226 [5.8]
8 [25]	2.685 [3.995]	2.713 [4.037]	1.000 [25.4]	0.79 [510]	3.142 [79.8]	0.700 [17.8]	0.050 [1.27]	0.383 [9.7]	0.259 [6.6]
9 [29]	3.396 [5.053]	3.441 [5.106]	1.128 [28.7]	1.00 [645]	3.544 [90.0]	0.790 [20.1]	0.056 [1.42]	0.431 [10.9]	0.292 [7.4]
10 [32]	4.312 [6.416]	4.358 [6.484]	1.270 [32.3]	1.27 [819]	3.990 [101.3]	0.889 [22.6]	0.064 [1.63]	0.487 [12.4]	0.329 [8.3]
11 [36]	5.296 [7.880]	5.352 [7.964]	1.410 [35.8]	1.56 [1006]	4.430 [112.5]	0.987 [25.1]	0.071 [1.80]	0.540 [13.7]	0.365 [9.3]
14 [43]	7.64 [11.37]	7.72 [11.49]	1.693 [43.0]	2.25 [1452]	5.32 [135.1]	1.185 [30.1]	0.085 [2.16]	0.648 [16.5]	0.438 [11.1]
18 [57]	13.59 [20.22]	13.72 [20.43]	2.257 [57.3]	4.00 [2581]	7.09 [180.1]	1.58 [40.1]	0.102 [2.59]	0.864 [21.9]	0.584 [14.8]

[A] The 400 and Duplex-Alloy Series is based on a density of 489.59 lb/ft^3 [7833.4 kg/m^3]. The 300 Series is based on a density of 494.78 lb/ft^3 [7916.5 kg/m^3]. Density varies with alloy content which may result in a variation of several percent.

[B] The nominal dimensions of a deformed bar are equivalent to those of a round bar having the same weight [mass] per foot [metre] as the deformed bar.

[C] The maximum gap (measured as a chord) between the ends of the deformations shall not exceed 25 %/*n* of the nominal perimeter of the bar, where n is the number of longitudinal gaps or longitudinal ribs around the perimeter of the bar.

Full document details: ASTM A955/A955M-14

AVA Documents
Document Sharing Hub

TABLE 2 Chemical Requirements of Typical Alloys[A]

UNS Designation	Type	Composition %								
		Carbon	Manganese	Phosphorus	Sulfur	Silicon	Chromium	Nickel	Molybdenum	Nitrogen
S24000	XM-29	0.08	11.50-14.50	0.060	0.030	1.00	17.00-19.00	2.25-3.75	....	0.20-0.40
S24100	XM-28	0.15	11.00-14.00	0.060	0.030	1.00	16.50-19.00	0.50-2.50	....	0.20-0.45
S30400	304	0.08	2.00	0.045	0.030	1.00	18.00-20.00	8.00-10.50	....	0.10
S31603	316L	0.03	2.00	0.045	0.030	1.00	16.00-18.00	10.00-14.00	2.00-3.00	0.10
S31653	316LN	0.03 max	2.00	0.045	0.030	1.00	16.00-18.00	10.00-14.00	2.00-3.00	0.10-0.16
S31803	....	0.03	2.00	0.030	0.020	1.00	21.00-23.00	4.50-6.50	2.50-3.50	0.08-0.20

[A] Maximum, unless otherwise indicated.

A510 Specification for General Requirements for Wire Rods and Coarse Round Wire, Carbon Steel

A510M Specification for General Requirements for Wire Rods and Coarse Round Wire, Carbon Steel (Metric) (Withdrawn 2011)[3]

A700 Practices for Packaging, Marking, and Loading Methods for Steel Products for Shipment (Withdrawn 2014)[3]

A751 Test Methods, Practices, and Terminology for Chemical Analysis of Steel Products

C192/C192M Practice for Making and Curing Concrete Test Specimens in the Laboratory

E29 Practice for Using Significant Digits in Test Data to Determine Conformance with Specifications

G15 Terminology Relating to Corrosion and Corrosion Testing (Withdrawn 2010)[3]

2.2 *U.S. Military Standard:*[4]

MIL-STD-129 Marking for Shipment and Storage

2.3 *U.S. Federal Standard:*[4]

Fed. Std. No. 123 Marking for Shipment (Civil Agencies)

3. Terminology

3.1 *Definitions of Terms Specific to This Standard:*

3.1.1 *deformations, n*—transverse protrusions on a deformed bar.

3.1.2 *deformed bar, n*—steel bar with protrusions; a bar that is intended for use as reinforcement in reinforced concrete construction.

3.1.2.1 *Discussion*—The surface of the bar is provided with lugs or protrusions that inhibit longitudinal movement of the bar relative to the concrete surrounding the bar in such construction. The lugs or protrusions conform to the provisions of this specification.

3.1.3 *plain bar, n*—steel bar without protrusions.

3.1.4 *relative deformation area, n*—the ratio of the deformation bearing area (projected deformation area normal to the bar axis) to the shearing area (nominal bar perimeter times the average spacing of the deformations.

3.1.5 *rib, n*—longitudinal protrusion on a deformed bar.

3.1.6 *stainless steel, n*—a steel that contains 11 % or more chromium.

3.1.7 *three-sided bar, n*—deformed steel bar with three rows of transverse deformations.

3.1.8 *two-sided bar, n*—deformed steel bar with two rows of transverse deformations.

4. Ordering Information

4.1 It shall be the responsibility of the purchaser to specify all requirements that are necessary for material ordered to this specification. Such requirements shall include but are not limited to the following:

4.1.1 Quantity (weight) [mass],

4.1.2 Name of material (deformed and plain stainless steel bars for concrete reinforcement),

4.1.3 Chemical composition (stainless steel alloy),

4.1.4 Heat treatment condition,

4.1.5 Size,

4.1.6 Cut lengths or coils,

4.1.7 Deformed or plain,

4.1.8 Grade (strength level),

4.1.9 Descaling method and finish,

4.1.10 Packaging (see Section 24),

4.1.11 Supplementary requirement (if desired), and

4.1.12 ASTM designation and year of issue.

5. Materials and Manufacture

5.1 The bars shall be rolled from properly identified heats of mold or strand cast steel.

5.2 Bars shall be furnished in one of the following heat treatment conditions, as shown in Specification A276, and as needed to meet the requirements of this specification.

5.2.1 Annealed (A).

5.2.2 Hot rolled (HR).

5.2.3 Strain hardened (B).

NOTE 3—The mechanical properties of the material result from the heat treat condition of the material. Any further heat treatment of the material may alter those properties and affect their ability to meet the specified strength level. No re-treatment should be imposed without retesting to the requirements of this specification.

[3] The last approved version of this historical standard is referenced on www.astm.org.

[4] Available from Standardization Documents Order Desk, DODSSP, Bldg. 4, Section D, 700 Robbins Ave., Philadelphia, PA 19111-5098, http://www.dodssp.daps.mil.

AVA Documents
Document Sharing Hub

Full document details: ASTM A955/A955M-14

6. Chemical Composition

6.1 The chemical analysis of each heat of steel shall be determined in accordance with Test Methods, Practices, and Terminology A751. The manufacturer shall make the analysis on test samples taken preferably during the pouring of the heat.

6.2 The chemical composition agreed to between manufacturer and purchaser shall conform to the requirements in Table 1 of Specification A276.

7. Requirements for Deformations

7.1 Deformations shall be spaced along the bar at substantially uniform distances. The deformations on all sides of the bar shall be similar in size, shape, and pattern.

7.2 The deformations shall be placed with respect to the axis of the bar so that the included angle is not less than 45°. Where the line of deformations forms an included angle with the axis of the bar of from 45 to 70° inclusive, the deformations on a two-sided bar shall alternately reverse in direction on each side or those on one side shall be reversed in direction from those on the opposite side. The deformations on three-sided bars shall reverse on one of the three sides (see Fig. 1). Where the line of deformation is over 70°, a reversal in direction is not required.

7.3 The average spacing or distance between deformations on each side of the bar shall not exceed seven tenths of the nominal diameter of the bar.

7.4 The overall length of deformations shall be such that the gap (measured as a chord) between the ends of the deformations shall not exceed 25 %/*n*, where *n* is the number of longitudinal gaps or longitudinal ribs, of the nominal perimeter of the bar. Where the ends of the deformations terminate in a longitudinal rib, the width of the longitudinal rib shall be considered as the gap between these ends. The summation of the gaps shall not exceed 25 % of the nominal perimeter of the bar. The nominal perimeter of the bar shall be 3.1416 times the nominal diameter.

7.5 The spacing, height, and gap of deformations shall conform to the requirements prescribed in Table 1.

8. Measurement of Deformations

8.1 The average spacing of deformations shall be determined by measuring the length of a minimum of ten spaces and dividing that length by the number of spaces included in the measurement. The measurement shall begin from a point on a deformation at the beginning of the first space to a corresponding point on a deformation after the last included space. Spacing measurements shall not be made over a bar area containing bar marking symbols.

8.2 The average height of deformations shall be determined from measurements made on not less than two typical deformations. Determinations shall be based on three measurements per deformation, one at the center of the overall length and the other two at the quarter points of the overall length.

8.3 For three-sided bars, the relative deformation area, R_d, shall meet the requirements of Annex A4.

8.4 Insufficient height, insufficient circumferential coverage, or excessive spacing of deformations shall not constitute cause for rejection unless it has been clearly established by determinations on each lot (Note 4) tested that typical deformation height, gap, or spacing does not conform to the minimum requirements prescribed in Section 7. No rejection shall be made on the basis of measurements if fewer than ten adjacent deformations on each side of the bar are measured.

NOTE 4—A lot, *for this purpose*, is defined as all the bars of one bar number and pattern of deformation contained in an individual shipping release or shipping order.

9. Tensile Requirements

9.1 The material, as represented by the test specimens, shall conform to the requirements for tensile properties prescribed in Table 3.

9.2 The yield strength shall be determined by the offset method (0.2 % offset), as described in Test Methods and Definitions A370.

9.3 When material is furnished in coils, the test specimen shall be taken from the coil and straightened prior to placing it in the jaws of the tensile test machine. Straightening of the test

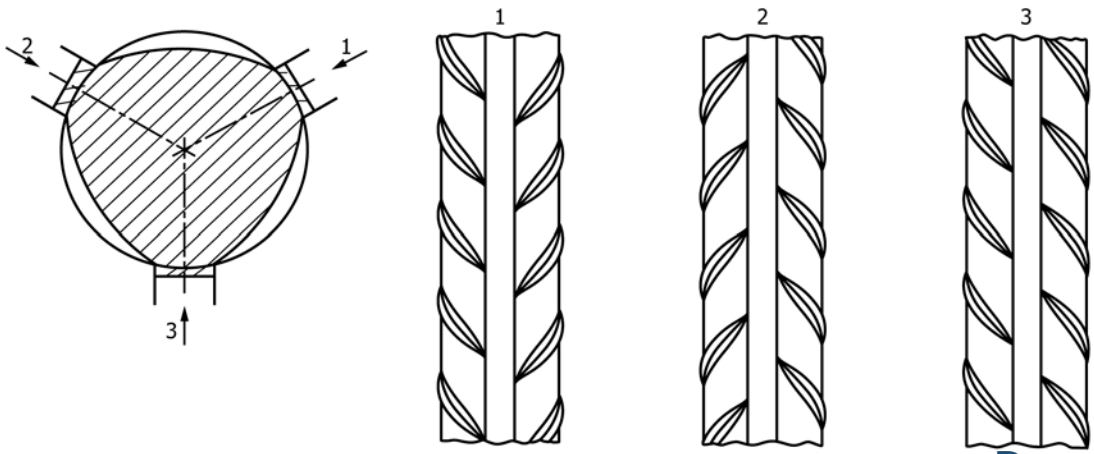

FIG. 1 Typical Three-Sided Deformed Bar

AVA Documents
Document Sharing Hub

Full document details: ASTM A955/A955M-14