Designation: B771 – 11$^{\varepsilon 1}$

Standard Test Method for Short Rod Fracture Toughness of Cemented Carbides[1]

This standard is issued under the fixed designation B771; the number immediately following the designation indicates the year of original adoption or, in the case of revision, the year of last revision. A number in parentheses indicates the year of last reapproval. A superscript epsilon (ε) indicates an editorial change since the last revision or reapproval.

ε[1] NOTE—This Test Method was changed editorially in 2012.

1. Scope

1.1 This test method covers the determination of the fracture toughness of cemented carbides (K_{IcSR}) by testing slotted short rod or short bar specimens.

1.2 The values stated in SI units are to be regarded as standard. The values given in parentheses are for information only.

1.3 *This standard does not purport to address all of the safety concerns, if any, associated with its use. It is the responsibility of the user of this standard to establish appropriate safety and health practices and determine the applicability of regulatory limitations prior to use.*

2. Referenced Documents

2.1 *ASTM Standards:*[2]

E399 Test Method for Linear-Elastic Plane-Strain Fracture Toughness K_{Ic} of Metallic Materials

3. Terminology Definitions

3.1 *stress intensity factor,* K_I, (*dimensional units* $FL^{-3/2}$)—the magnitude of the ideal-crack-tip stress field for mode *I* in a linear-elastic body.

NOTE 1—Values of K for mode I are given by:

$$K_I = \lim_{r \to 0} \left[\sigma_y \sqrt{2\pi r}\right] \quad (1)$$

where:

r = distance directly forward from the crack tip to a location where the significant stress σ_y is calculated, and

σ_y = principal stress normal to the crack plane.

3.2 *Abbreviations:* fracture toughness of cemented carbide, K_{IcSR}, (*dimensional units* $FL^{-3/2}$)—the material-toughness property measured in terms of the stress-intensity factor K_I by the operational procedure specified in this test method.

4. Summary of Test Method

4.1 This test method involves the application of an opening load to the mouth of the short rod or short bar specimen which contains a chevron-shaped slot. Load versus displacement across the slot at the specimen mouth is recorded autographically. As the load is increased, a crack initiates at the point of the chevron slot and slowly advances longitudinally, tending to split the specimen in half. The load goes through a smooth maximum when the width of the crack front is about one third of the specimen diameter (short rod) or breadth (short bar). Thereafter, the load decreases with further crack growth. Two unloading-reloading cycles are performed during the test to measure the effects of any macroscopic residual stresses in the specimen. The fracture toughness is calculated from the maximum load in the test and a residual stress parameter which is evaluated from the unloading-reloading cycles on the test record.

5. Significance and Use

5.1 The property K_{IcSR} determined by this test method is believed to characterize the resistance of a cemented carbide to fracture in a neutral environment in the presence of a sharp crack under severe tensile constraint, such that the state of stress near the crack front approaches tri-tensile plane strain, and the crack-tip plastic region is small compared with the crack size and specimen dimensions in the constraint direction. A K_{IcSR} value is believed to represent a lower limiting value of fracture toughness. This value may be used to estimate the relation between failure stress and defect size when the conditions of high constraint described above would be expected. Background information concerning the basis for

[1] This test method is under the jurisdiction of ASTM Committee B09 on Metal Powders and Metal Powder Productsand is the direct responsibility of Subcommittee B09.06 on Cemented Carbides.

Current edition approved Oct. 1, 2011. Published February 2012. Originally approved in 1987. Last previous edition approved in 2011 as B771 – 11. DOI: 10.1520/B0771-11E01.

[2] For referenced ASTM standards, visit the ASTM website, www.astm.org, or contact ASTM Customer Service at service@astm.org. For *Annual Book of ASTM Standards* volume information, refer to the standard's Document Summary page on the ASTM website.

Copyright © ASTM International, 100 Barr Harbor Drive, PO Box C700, West Conshohocken, PA 19428-2959. United States

Documents
Document Sharing Hub
Full document details: ASTM B771-11e1

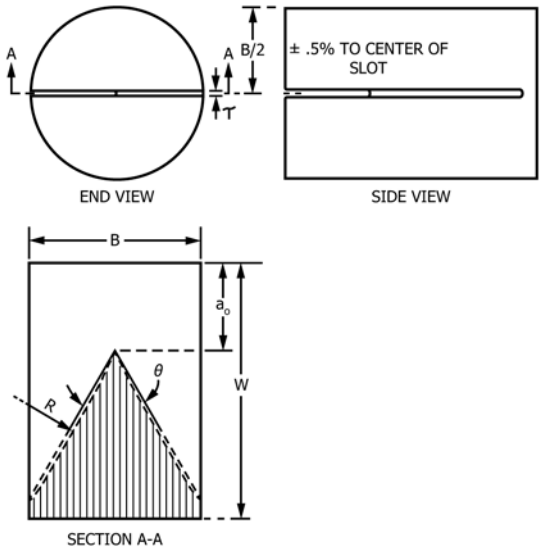

Standard Dimensions
Short Rod

	(mm)	(in.)
B	= 12.700 ± 0.025	0.500 ± 0.001
W	= 19.050 ± 0.075	0.750 ± 0.003
τ	= 0.381 ± 0.025	0.015 ± 0.001
	For Curved Slot Option	
a_o	= 6.350± 0.075	0.250 ± 0.003
θ	= 58.0° ± 0.5°	
R	= 62.23 ± 1.27	02.45 ± 0.05
	For Straight Slot Option	
a_o	= 6.744± 0.075	0.266 ± 0.003
θ	= 55.2° ± 0.5°	
R	= ∞	∞

FIG. 1 Short Rod Specimen

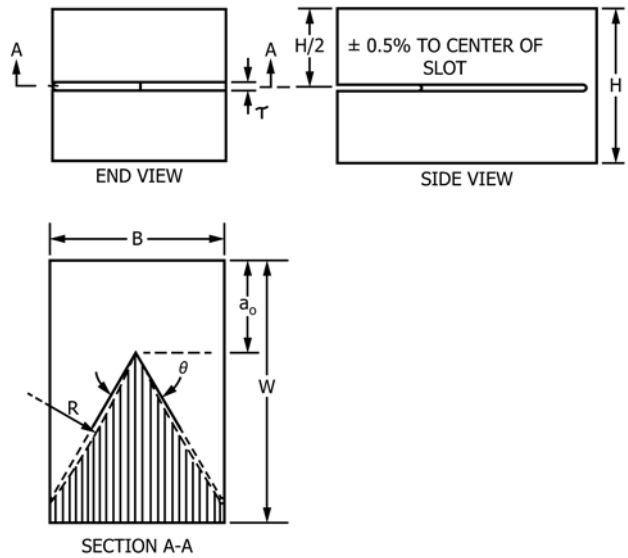

Standard Dimensions
Short Bar

	(mm)	(in.)
B	= 12.700 ± 0.025	0.500 ± 0.001
H	= 11.050 ± 0.025	0.435 ± 0.001
W	= 19.050 ± 0.075	0.750 ± 0.003
τ	= 0.381± 0.025	0.015 ± 0.001
	For Curved Slot Option	
a_o	= 6.350± 0.075	0.250 ± 0.003
θ	= 58.0° ± 0.5°	
R	= 62.23 ± 1.27	2.45 ± 0.05
	For Straight Slot Option	
a_o	= 6.744 ± 0.075	0.266 ± 0.003
θ	= 55.2° ± 0.5°	
R	= ∞	∞

FIG. 2 Short Bar Specimen

development of this test method in terms of linear elastic fracture mechanics may be found in Refs (**1-7**).[3]

5.2 This test method can serve the following purposes:

5.2.1 To establish, in quantitative terms significant to service performance, the effects of fabrication variables on the fracture toughness of new or existing materials, and

5.2.2 To establish the suitability of a material for a specific application for which the stress conditions are prescribed and for which maximum flaw sizes can be established with confidence.

6. Specimen Configuration, Dimensions, and Preparation

6.1 Both the round short rod specimen and the rectangular shaped short bar specimen are equally acceptable and have been found to have the same calibration (**5**). The short rod dimensions are given in Fig. 1; the short bar in Fig. 2.

6.2 *Grip Slot*—Depending on the apparatus used to test the specimen, a grip slot may be required in the specimen front face, as shown in Fig. 3. The surfaces in the grip slot shall have a smooth ground finish so that the contact with each grip will be along an essentially continuous line along the entire grip slot, rather than at a few isolated points or along a short segment within the grip slot.

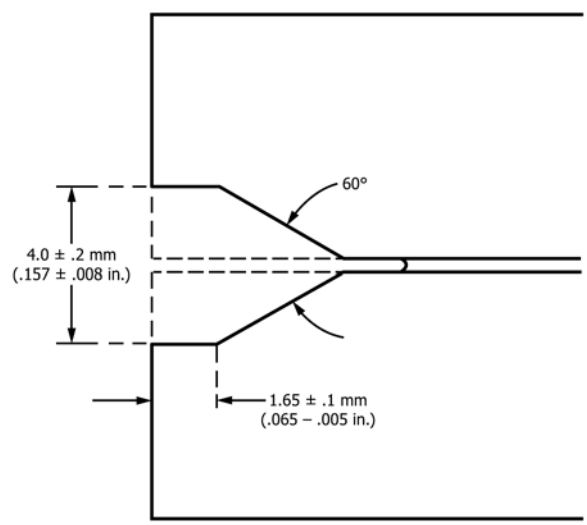

NOTE 1—The dashed lines show the front face profile of Figs. 1 and 2 without grip slot.

FIG. 3 Short Rod and Short Bar Grip Slot in Specimen Front Face

6.3 *Crack-Guiding Slots*—These may be ground using a diamond abrasive wheel of approximately 124 ± 3 mm (4.9 ± 0.1 in.) diameter, with a thickness of 0.36 ± 0.01 mm (0.0140 ± 0.0005 in.). The resulting slots in the specimen are slightly

[3] The boldface numbers in parentheses refer to the list of references at the end of this standard.

AVA Documents
Document Sharing Hub

Full document details: ASTM B771-11e1

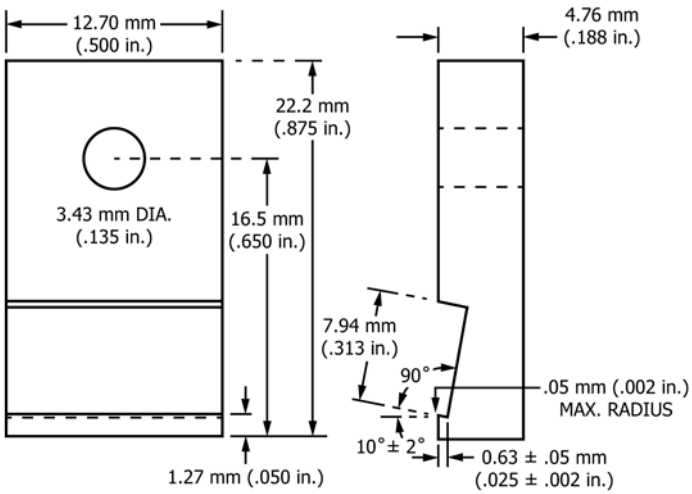

FIG. 4 Grip Design

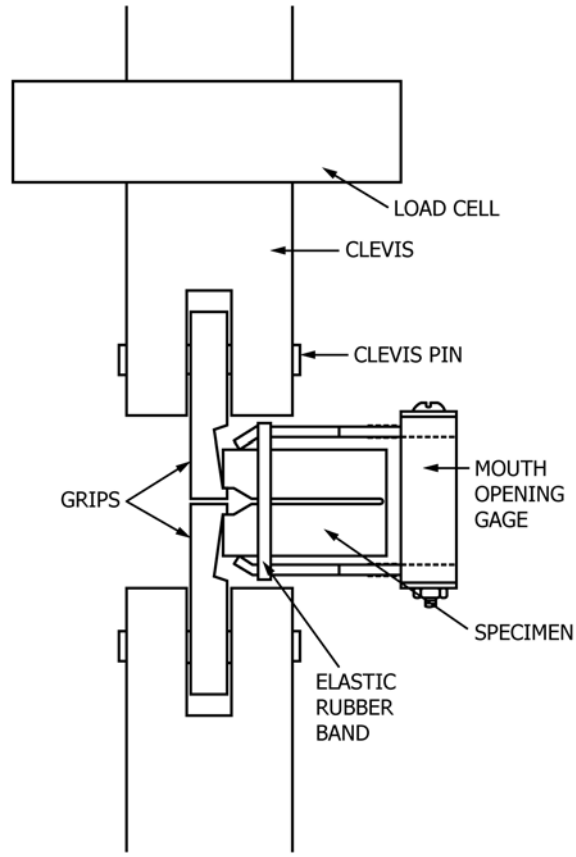

FIG. 5 Tensile Test Machine Test Configuration

thicker than the diamond wheel (0.38 ± 0.02 mm, or 0.015 ± 0.001 in.). A diamond concentration number of 50, and a grit size of 150 are suggested. Dimensions are given in Fig. 1 and Fig. 2 for two slotting options: (*1*) Specimens with curved slot bottoms made by plunge feeding the specimen onto a diamond cutting wheel of a given radius, and (*2*) Specimens with straight slot bottoms made by moving the specimen by a cutting wheel. The values of a_o and θ for the two slot configurations are chosen to cause the specimen calibration to remain constant.

7. Apparatus

7.1 The procedure involves testing of chevron-slotted specimens and recording the load versus specimen mouth opening displacement during the test.

7.2 *Grips and Fixtures for Tensile Test Machine Loading*—Grip slots are required in the specimen face for this test method, as shown in Fig. 3. Fig. 4 shows the grip design. Grips shall have a hardness of 45 HRC or greater, and shall be capable of providing loads to at least 1560 N (350 lbf). The grips are attached to the arms of tensile test machine by the pin and clevis arrangement shown in Fig. 5. The grip lips are inserted into the grip slot in the specimen, and the specimen is loaded as the test machine arms apply a tensile load to the grips. A transducer for measuring the specimen mouth opening displacement during the test, and means for automatically recording the load-displacement test record, such as an *X-Y* recorder, are also required when using the tensile test machine apparatus. A suggested design for the specimen mouth opening displacement gage appears in Fig. 6. The gage shall have a displacement resolution of 0.25 µm (10×10^{-6} in.) or better. However, it is not necessary to calibrate the displacement axis of the test record since only displacement ratios are used in the data analysis.

7.3 *Distributed Load Test Machine*[4]—An alternative special purpose machine that has been found suitable for the test requires no grip slot in the front face of the specimen. A thin stainless steel inflatable bladder is inserted into the chevron slot in the mouth of the specimen. Subsequent inflation of the bladder causes it to press against the inner surfaces of the slot, thus producing the desired loading. The machine provides load and displacement outputs, which must be recorded externally on a device such as an *X-Y* recorder.

7.4 *Testing Machine Characteristics*—It has been observed that some grades of carbides show a "pop-in" type of behavior in which the load required to initiate the crack at the point of the chevron slot is larger than the load required to advance the crack just after initiation, such that the crack suddenly and audibly jumps ahead at the time of its initiation. Occasionally, the load at crack initiation can exceed the load maximum which occurs as the crack passes through the critical location in the specimen. When this occurs, a very stiff machine with

[4] The sole instrument of this type known to the committee is the FraQ WC, available from Dijon Instrument Inc, 1948 Michigan Ave, Salt Lake City, UT 84108. If you are aware of alternative suppliers, please provide this information to ASTM International Headquarters. Your comments will receive careful consideration at a meeting of the responsible technical committee1, which you may attend.

Documents
Document Sharing Hub
Full document details: ASTM B771-11e1