Designation: C1121/C1121M – 04 (Reapproved 2015)

Standard Test Method for Turner and Newall (T and N) Wet-Length Classification of Asbestos[1]

This standard is issued under the fixed designation C1121/C1121M; the number immediately following the designation indicates the year of original adoption or, in the case of revision, the year of last revision. A number in parentheses indicates the year of last reapproval. A superscript epsilon (ε) indicates an editorial change since the last revision or reapproval.

1. Scope

1.1 This test method covers the operation of the Turner and Newall (T and N) wet sieving classifier for asbestos,[2] and a procedure for the determination of fiber length distribution and fines (defined in Terminology D2946) content of milled asbestos fiber (−74 µm [200 mesh]) sieve described in Specification E11.

1.2 For purposes of estimating length distribution, the test is limited to samples free from excessive quantities of non-fibrous particles or contaminants. Quantities exceeding 0.05 g retained in any given length fractions are considered excessive.

1.3 For comparisons between different fiber grades, only those specimens which have approximately the same degree of fiberization as determined by Test Methods D2752/D2752M will give completely meaningful results.

1.4 This test method is not applicable to ultrafine grades of asbestos powders which contain little or no fibers retained on a 74-µm [200 mesh] sieve. This method is restricted to Quebec Standard[3] grades 4A to 7D inclusive as determined by Test Method D3639/D3639M.

NOTE 1—This is an alternative procedure to Test Method D2589/D2589M.

1.5 The values stated in either SI units or inch-pound units are to be regarded separately as standard. The values stated in each system may not be exact equivalents; therefore, each system shall be used independently of the other. Combining values from the two systems may result in non-conformance with the standard.

1.6 **Warning—**Breathing of asbestos dust is hazardous. Asbestos and asbestos products present demonstrated health risks for users and for those with whom they come into contact. In addition to other precautions, when working with asbestos-cement products, minimize the dust that results. For information on the safe use of chrysoltile asbestos, refer to "Safe Use of Chrysotile Asbestos: A Manual on Preventive and Control Measures."[4]

1.7 *This standard does not purport to address all of the safety concerns, if any, associated with its use. It is the responsibility of the user of this standard to establish appropriate safety and health practices and determine the applicability of regulatory limitations prior to use.* For a specific hazard statement, see 1.6.

2. Referenced Documents

2.1 *ASTM Standards:*[5]

D2589/D2589M Test Method for McNett Wet Classification of Dual Asbestos Fiber

D2590/D2590M Test Method for Sampling Chrysotile Asbestos

D2752/D2752M Test Methods for Air Permeability of Asbestos Fibers

D2946 Terminology for Asbestos and Asbestos–Cement Products

D3639/D3639M Test Method for Classification of Asbestos by Quebec Standard Test

D3879 Test Method for Sampling Amphibole Asbestos (Withdrawn 2009)[6]

E11 Specification for Woven Wire Test Sieve Cloth and Test Sieves

E177 Practice for Use of the Terms Precision and Bias in ASTM Test Methods

2.2 *Other Standard:*

Quebec Asbestos Mining Association (QAMA) Standard Designation of Chrysotile Asbestos Grades[3]

[1] This test method is under the jurisdiction of ASTM Committee C17 on Fiber-Reinforced Cement Products and is the direct responsibility of Subcommittee C17.03 on Asbestos - Cement Sheet Products and Accessories.

Current edition approved July 1, 2015. Published July 2015. Originally approved in 1989. Last previous edition approved in 2009 as C1121 – 04(2009)ε1. DOI: 10.1520/C1121_C1121M-04R15.

[2] The apparatus is supplied, on a non-profit basis, as a service to the asbestos industry by TAF International, Bowdon House, Ashburton Rd. W, Trafford Park, Manchester M170RQ, England.

[3] Available from the Asbestos Institute, 1300 Sherbrooke St. West, Suite 412, Montreal QC, Canada H3A 2M8.

[4] Available from The Asbestos Institute, http://www.chrysotile.com/en/sr_use/manual.htm.

[5] For referenced ASTM standards, visit the ASTM website, www.astm.org, or contact ASTM Customer Service at service@astm.org. For *Annual Book of ASTM Standards* volume information, refer to the standard's Document Summary page on the ASTM website.

[6] The last approved version of this historical standard is referenced on www.astm.org.

Copyright © ASTM International, 100 Barr Harbor Drive, PO Box C700, West Conshohocken, PA 19428-2959. United States

Documents
Document Sharing Hub
Full document details: ASTM C1121/C1121M-04(2015)

3. Terminology

3.1 *Definitions*—Refer to Terminology D2946.

4. Summary of Test Method

4.1 A weighed specimen of asbestos fiber is dispersed in water and the dispersion is allowed to flow by gravity through a series of superposed screens which rotate in a horizontal plane. The suspension flows through successively finer screens which retain the oversized fibers. The rotation of the screens distributes the incoming fiber suspension throughout the vessel, and the swirling motion created by the incoming jet of water maintains the fibers in suspension and ensures that they all encounter the screen apertures.

4.2 At the end of the test period, the screens bearing the classified fiber fractions are removed from the vessels, dried, and weighed. The – 74 µm fines content is estimated by difference.

5. Significance and Use

5.1 This test method provides a simple procedure for obtaining information on the fiber length distribution of suitable asbestos fiber. The use of relatively low cost apparatus, small test specimens, and a short test period, enhance the usefulness of this test method.

5.2 Normally, results obtained by this test method are reproducible under comparable laboratory conditions. However, close agreement cannot be expected unless all deviations from the procedure, however minor, are avoided. Moreover, results for longer fiber grades are influenced to a greater extent by differences in fiber length distribution, and characteristics, than are those for shorter grades.

5.3 This test is suitable for specification acceptance and manufacturing control.

5.4 It is assumed that all undersized fibers, and only those, will pass through any given sieve aperture. However, this idealized condition is not normally achieved. Thus, results should not be misconstrued as true length distribution data.

6. Apparatus

6.1 *Wet Sieving Classifier,* consisting of four 127-mm [5-in.] diameter rotating circular vessels, the bottom of which are fitted with 98-mm [3.86-in.] diameter screens, stacked vertically and concentrically in order of diminishing screen apertures. The apparatus is fitted with stirrers to prevent screen blinding, and with spouts for conducting the drainage from each vessel to the following vessel. The lowest vessel discharges onto a 74-µm [200 mesh] sieve 203.2 mm [8 in.] in diameter, in the base of the apparatus as shown in Fig. 1.

6.1.1 The rotational speed for the sieves must be 190 + 5 rpm.

6.1.2 The stroke frequency for the agitators must be 192 + 5 strokes/min.

6.2 *Sieve Disks*—fitted with screen cloth equivalent to 2.36 mm, 1.18 mm, 600 µm, 300 µm, 74 µm, and 63 µm [US No. 8, 16, 30, 50, and 200], are required. British Standard, Tyler, and US Standard equivalent sieves are listed in Table 1.

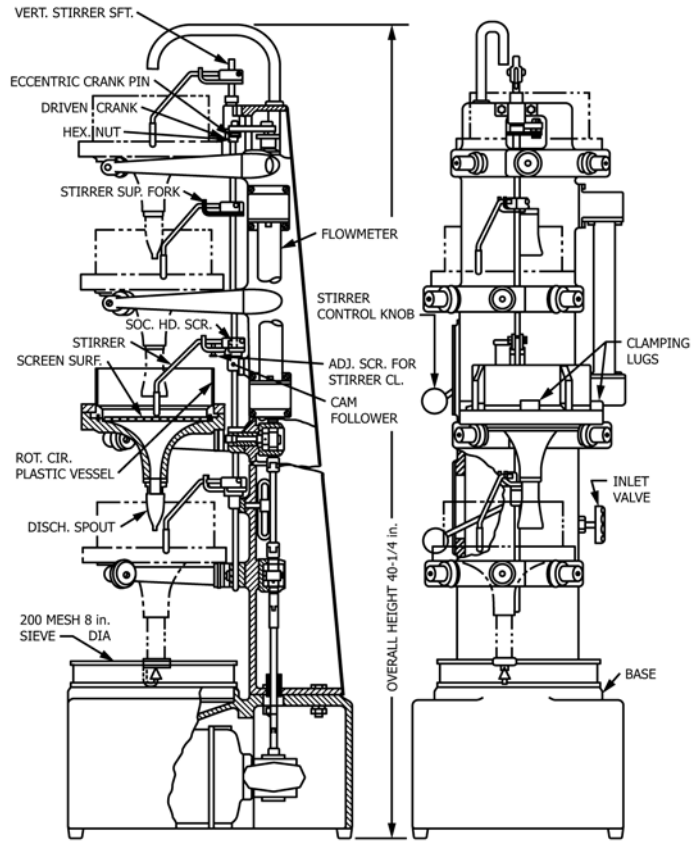

FIG. 1 Turner and Newall Classifier

TABLE 1 Sieve Equivalents

Standard Designations		Alternative Designations		Aperture Sizes[A]	
USA[B] and British	Tyler Mesh per in.	USA No.	British Mesh (approx.) per in.	mm	in. (approx.)
2.36 mm	8	8	7	2.36	0.0929
1.18 mm	14	16	14	1.18	0.0465
600 µm	28	30	25	0.60	0.0236
300 µm	48	50	52	0.30	0.0118
75 µm	200	200	200	0.075	0.00295
53 µm	250	230	240	0.063	0.00248

[A] Specified apertures are now identical for the three series.
[B] Identical with ASTM Standard sieves and ISO Standard apertures.

6.3 *Test Sieve (74-µm [200 mesh]),* 203.2-mm [8-in.] diameter, as described in Specification E11, or equivalent Tyler or British Standard for country of use.

6.4 *Sieve Disk (63 µm [U.S. No. 230]),* of finer mesh for drying 74-µm [200 mesh] fractions.

6.5 *Fraction Collector,* supplied with the apparatus, or optional suction arrangement, such as a Büchner funnel.

6.6 *Drying Apparatus*—Drying Oven (Convection Type, or Mechanical Draft) or Infrared Drying Device.

6.7 *Pressure Regulator and Filter*—if required, to ensure a constant flow of clean water to the classifier.

7. Hazards

7.1 **Warning**—see 1.6.

Documents
Document Sharing Hub

Full document details: ASTM C1121/C1121M-04(2015)