This international standard was developed in accordance with internationally recognized principles on standardization established in the Decision on Principles for the Development of International Standards, Guides and Recommendations issued by the World Trade Organization Technical Barriers to Trade (TBT) Committee.

Designation: C12 – 22a

Standard Practice for Installing Vitrified Clay Pipe Lines[1]

This standard is issued under the fixed designation C12; the number immediately following the designation indicates the year of original adoption or, in the case of revision, the year of last revision. A number in parentheses indicates the year of last reapproval. A superscript epsilon (ε) indicates an editorial change since the last revision or reapproval.

This standard has been approved for use by agencies of the U.S. Department of Defense.

1. Scope

1.1 This practice covers the proper methods of installing vitrified clay pipe lines by open trench construction methods in order to fully utilize the structural properties of such pipe.

1.2 The values stated in inch-pound units are to be regarded as standard. The values given in parentheses are mathematical conversions to SI units that are provided for information only and are not considered standard.

1.3 *This standard does not purport to address all of the safety concerns, if any, associated with its use. It is the responsibility of the user of this standard to establish appropriate safety, health, and environmental practices and determine the applicability of regulatory limitations prior to use.*

1.4 *This international standard was developed in accordance with internationally recognized principles on standardization established in the Decision on Principles for the Development of International Standards, Guides and Recommendations issued by the World Trade Organization Technical Barriers to Trade (TBT) Committee.*

2. Referenced Documents

2.1 *ASTM Standards:*[2]

C301 Test Methods for Vitrified Clay Pipe

C425 Specification for Compression Joints for Vitrified Clay Pipe and Fittings

C700 Specification for Vitrified Clay Pipe, Extra Strength, Standard Strength, and Perforated

C828 Test Method for Low-Pressure Air Test of Vitrified Clay Pipe Lines

C896 Terminology Relating to Clay Products

C923/C923M Specification for Resilient Connectors Between Reinforced Concrete Manhole Structures, Pipes, and Laterals

C1091 Test Method for Hydrostatic Infiltration Testing of Vitrified Clay Pipe Lines

D1586/D1586M Test Method for Standard Penetration Test (SPT) and Split-Barrel Sampling of Soils

D2487 Practice for Classification of Soils for Engineering Purposes (Unified Soil Classification System)

D2488 Practice for Description and Identification of Soils (Visual-Manual Procedures)

D4832 Test Method for Preparation and Testing of Controlled Low Strength Material (CLSM) Test Cylinders

D5821 Test Method for Determining the Percentage of Fractured Particles in Coarse Aggregate

D6024/D6024M Test Method for Ball Drop on Controlled Low Strength Material (CLSM) to Determine Suitability for Load Application

D6103/D6103M Test Method for Flow Consistency of Controlled Low Strength Material (CLSM)

3. Terminology

3.1 *General*—Terminology C896 can be used for clarification of terminology in this specification.

3.2 See Fig. 1.

DESIGN CONSIDERATIONS

4. Supporting Strength

4.1 The field supporting strength of vitrified clay pipe is materially affected by the methods of installation. The field supporting strength of a pipe is defined as its capacity to support dead and live loads under actual field conditions. It is dependent upon two factors: (*1*) the inherent strength of the pipe and (*2*) the bedding of the pipe.

4.2 The minimum bearing strength requirement in accordance with Specification C700, as determined by the 3-edge-bearing test of Test Methods C301, is a measure of the inherent strength of the pipe.

4.3 The tests used to measure bearing strength determine relative pipe strengths but do not represent actual field conditions. Therefore, an adjustment called a load factor is introduced to convert minimum bearing strength to field supporting strength. The magnitude of the load factor depends on how the pipe is bedded. The relationship is:

[1] This practice is under the jurisdiction of ASTM Committee C04 on Vitrified Clay Pipe and is the direct responsibility of Subcommittee C04.20 on Methods of Test and Specifications.

Current edition approved Sept. 1, 2022. Published September 2022. Originally approved in 1915. Last previous edition approved in 2022 as C12 – 22. DOI: 10.1520/C0012-22A.

[2] For referenced ASTM standards, visit the ASTM website, www.astm.org, or contact ASTM Customer Service at service@astm.org. For *Annual Book of ASTM Standards* volume information, refer to the standard's Document Summary page on the ASTM website.

Copyright © ASTM International, 100 Barr Harbor Drive, PO Box C700, West Conshohocken, PA 19428-2959. United States

Documents
Document Sharing Hub
Full document details: ASTM C12-22a

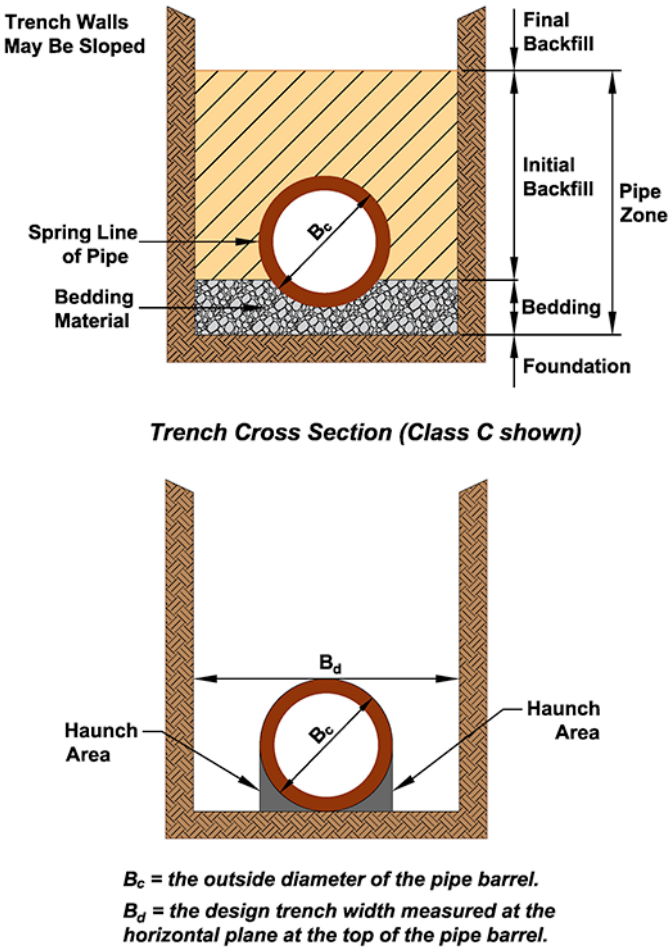

FIG. 1 Terminology

$$\text{Field supporting strength} = \text{minimum bearing strength} \times \text{load factor}$$

4.4 A factor of safety >1.0 and ≤1.5 shall be applied to the field supporting strength to calculate a safe supporting strength. The relationship is:

$$\text{Safe supporting strength} = \frac{\text{Field supporting strength}}{\text{Factor of safety}}$$

5. External Loads

5.1 The external loads on installed vitrified clay pipe are of two general types: (*1*) dead loads and (*2*) live loads.

5.2 For pipes installed in trenches at a given depth, the dead load increases as the trench width, measured at the top of the pipe, increases. Pipe failure may result if the design trench width is exceeded. If the trench width exceeds the design width, a higher class of bedding, stronger pipe, or both, must be investigated.

5.3 Live loads that act at the ground surface are partially transmitted to the pipe. Live loads may be produced by wheel loading, construction equipment or by compactive effort. Compaction of embedment and backfill materials, beside and above the sewer pipe, produces a temporary live load on the pipe. The magnitude of the live load from compactive effort varies with soil type, degree of saturation, degree of compaction and depth of cover over the pipe. Care must be used in selection of compaction methods so that the combined dead load and live load does not exceed the field supporting strength of the pipe, or cause a change in its line or grade.

NOTE 1—For generally accepted criteria and methods for determining loads and supporting strengths, see *Gravity Sanitary Sewer Design and Construction, Water Pollution Control Federation Manual of Practice No. FD-5, American Society of Civil Engineers—Manuals and Report on Engineering Practice—No. 60.*[3]

6. Bedding and Encasement

6.1 Classes of bedding and encasements for pipe in trenches are defined herein. The load factors indicated are for conversion of minimum bearing strength to field supporting strength.

6.1.1 The soil groups used in each bedding class are defined in Table 1.

6.1.2 The gradation for Class I and Class II soil for Class C bedding (Fig. 3) shall have a maximum particle size of 1 in. (25 mm).

6.1.3 The gradation for Class I and Class II bedding material for Class B (Fig. 4), Crushed Stone Encasement (Fig. 5), and CLSM installation (Fig. 6) shall be as follows:

100 % passing a 1 in. (25 mm) sieve
40-60 % passing a ¾ in. (19 mm) sieve
0-25 % passing a ⅜ in. (9.5 mm) sieve

6.1.4 For Class I, all particle faces shall be fractured.

6.1.5 Class II soils shall have a minimum of one fractured face. For Class B (Fig. 4), Crushed Stone Encasement (Fig. 5), and CLSM installations (Fig. 6) where high, or changing water tables, or both, are present; Class II material shall have a minimum percentage by particle count of one fractured face-100 %, two fractured faces-85 %, and three fractured faces-65 % in accordance with Test Method D5821.

6.1.6 Class I material is considered to be more stable and provide better support than Class II material that have some rounded edges.

6.1.7 All bedding material shall be shovel-sliced so the material fills and supports the haunch area and encases the pipe to the limits shown in the trench diagrams.

6.2 *Class D* (Fig. 2)*:*

6.2.1 The pipe shall be placed on a foundation with bell holes provided (Fig. 7).

6.2.2 The initial backfill shall be either Class I, II, III, or IV having a maximum particle size of 1 in. (25 mm).

6.2.3 The load factor for Class D bedding is 1.1.

6.3 *Class C* (Fig. 3)*:*

6.3.1 The pipe shall be bedded in Class I or Class II soil. Refer to 6.1.2 and Table 2 for requirements. Sand is suitable as a bedding material in a total sand environment, but may be unsuitable where high and rapidly changing water tables are present in the pipe zone. Sand may also be undesirable in a trench cut by blasting or in trenches through clay type soil. Regardless of the trench condition or bedding class, the maximum load factor for sand bedding is 1.5. The bedding shall have a minimum thickness beneath the pipe of 4 in. (100 mm) or one sixth of the outside diameter of the pipe, whichever

[3] Available from American Society of Civil Engineers (ASCE), 1801 Alexander Bell Dr., Reston, VA 20191, http://www.asce.org.

AVA Documents
Document Sharing Hub

Full document details: ASTM C12-22a

TABLE 1 Uniform Soil Groups for Pipe Installation

NOTE 1—Soil Classification descriptions and symbols are in accordance with Practice D2487 and Practice D2488.

NOTE 2—For Class I, all particle faces shall be fractured.

NOTE 3—Materials such as broken coral, shells, slag, and recycled concrete (with less than 12 % passing a #200 sieve) should be treated as Class II soils.

NOTE 4—Class V soil is not suitable for use as a bedding or initial backfill material.

Class I	**crushed rock** 100 % passing 1-½ in. (38 mm) sieve, <= 15 % passing #4 sieve, <= 25 % passing ⅜ in. (9.5 mm) sieve, <= 12 % passing #200 sieve	
Class II	**clean, coarse grained soils** or any soil beginning with one of these symbols (can contain fines up to 12 %) uniform fine sands (SP) with more than 50 % passing a #100 sieve should be treated as Class III material	**GW, GP, SW, SP**
	coarse grained soils with fines or any soil beginning with one of these symbols	**GM, GC, SM, SC**
Class III	**sandy or gravelly fine grained soils** or any soil beginning with one of these symbols with >/= 30 % retained on #200 sieve	**ML, CL**
Class IV	**fine-grained soils** or any soil beginning with one of these symbols with <30 % retained on #200 sieve	**ML, CL**
Class V	**fine-grained soils, organic soils** high compressibility silts and clays, organic soil	**MH, CH, OL, OH, Pt**

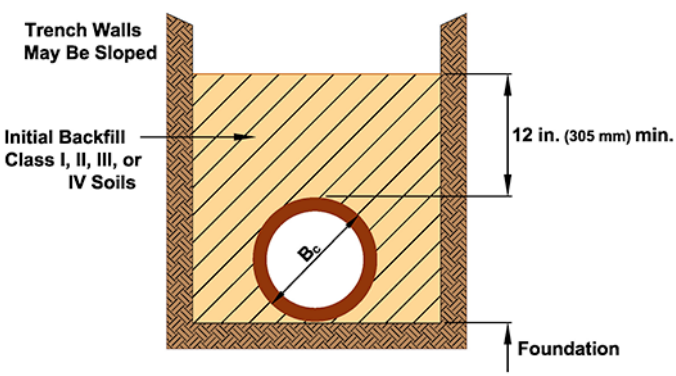

Class D Bedding - Load Factor = 1.1

FIG. 2 Class D

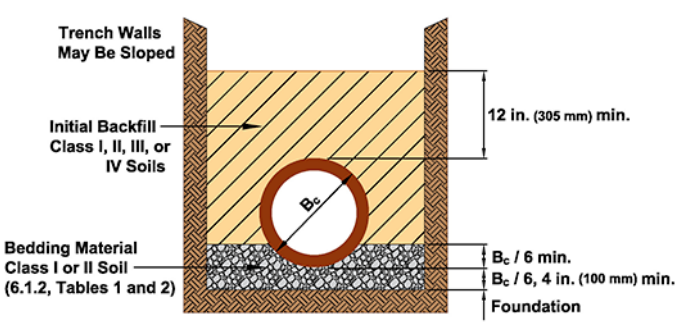

Class C Bedding - Load Factor = 1.5

FIG. 3 Class C

is greater, and shall extend up the haunches of the pipe one sixth of the outside diameter of the pipe.

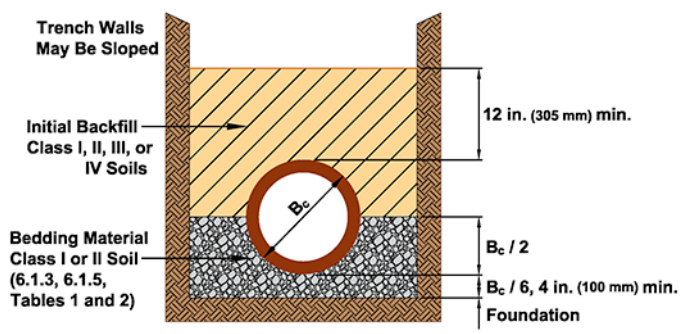

Class B Bedding - Load Factor = 1.9

FIG. 4 Class B

6.3.2 The initial backfill shall be either Class I, II, III, or IV having maximum particle size of 1-½ in. (38 mm) (see Table 2).

6.3.3 The load factor for Class C bedding is 1.5.

6.4 *Class B* (Fig. 4)*:*

6.4.1 The pipe shall be bedded in Class I or Class II soil. Refer to 6.1.3, 6.1.5, and Table 2 for requirements. The bedding shall have a minimum thickness beneath the pipe of 4 in. (100 mm) or one sixth of the outside diameter of the pipe, whichever is greater, and shall extend up the haunches of the pipe to the springline.

6.4.2 The initial backfill shall be either Class I, II, III, or IV having a maximum particle size of 1-½ in. (38 mm).

6.4.3 The load factor for Class B bedding is 1.9.

6.5 *Crushed Stone Encasement* (Fig. 5)*:*

6.5.1 The pipe shall be bedded in Class I or Class II soil. Refer to 6.1.3, 6.1.5, and Table 2 for requirements. The

AVA Documents
Document Sharing Hub

Full document details: ASTM C12-22a