This international standard was developed in accordance with internationally recognized principles on standardization established in the Decision on Principles for the Development of International Standards, Guides and Recommendations issued by the World Trade Organization Technical Barriers to Trade (TBT) Committee.

Designation: C1242 – 23c

Standard Guide for Selection, Design, and Installation of Dimension Stone Attachment Systems[1]

This standard is issued under the fixed designation C1242; the number immediately following the designation indicates the year of original adoption or, in the case of revision, the year of last revision. A number in parentheses indicates the year of last reapproval. A superscript epsilon (ε) indicates an editorial change since the last revision or reapproval.

INTRODUCTION

Natural building stone is chosen as a building's cladding for its beauty which endures with minimal maintenance. Stone is durable when used properly. Exercising good judgment when selecting the particular stone, determining the quarrying and fabrication techniques, designing the method of attachment, and installing all components correctly maximizes these benefits. A properly executed stone cladding is designed and installed within the capabilities and limitations of the stone and support system to resist all forces that work on them.

This guide presents design principles that require consideration when designing anchorages and evaluating exterior stone to be compatible with its proposed use. It is an overview of current techniques and a review of minimum requirements for sound stone engineering and construction. The guide does not list all possible methods of attachment nor does it provide a step-by-step procedure for stone anchor engineering. Knowledge gained from new engineering designs, testing of applications, and the investigation of existing problems are continually reviewed to update this guide. Comment from users is encouraged.

Good judgment by architects, engineers, and contractors when specifying, designing, engineering, and constructing stone and other work that interfaces stone is necessary to use this guide. Users of this guide should combine known performance characteristics of the stone, the building's structural behavior, and knowledge of materials and construction methods with proven engineering practice.

1. Scope

1.1 This guide covers the categories of anchors and anchoring systems and discusses the design principles to be considered in selecting anchors or systems that will resist gravity loads and applied loads.

1.2 This guide sets forth basic requirements for the design of stone anchorage and provides a practical checklist of those design considerations.

1.3 This guide pertains to:

1.3.1 The anchoring of stone panels directly to the building structure for support,

1.3.2 The anchoring of stone panels to subframes or to curtainwall components after these support systems are attached to the building structure,

1.3.3 The anchoring of stone panels to subframes or to curtainwall components with stone cladding preassembled before these support systems are attached to the building structure, and

1.3.4 The supervision and inspection of fabrication and installation of the above.

1.4 Observe all applicable regulations, specific recommendations of the manufacturers, and standards governing interfacing work.

1.5 The values stated in inch-pound units are to be regarded as standard. The values given in parentheses are mathematical conversions to SI units that are provided for information only and are not considered standard.

1.6 *This standard does not purport to address all of the safety concerns, if any, associated with its use. It is the responsibility of the user of this standard to establish appropriate safety, health, and environmental practices and determine the applicability of regulatory limitations prior to use.* (See Tables 1 and 2.)

1.7 *This international standard was developed in accordance with internationally recognized principles on standardization established in the Decision on Principles for the*

[1] This guide is under the jurisdiction of ASTM Committee C18 on Dimension Stone and is the direct responsibility of Subcommittee C18.06 on Attachment Components and Systems.

Current edition approved Nov. 15, 2023. Published February 2024. Originally approved in 1993. Last previous edition approved in 2023 as C1242 – 23b. DOI: 10.1520/C1242-23C.

Copyright © ASTM International, 100 Barr Harbor Drive, PO Box C700, West Conshohocken, PA 19428-2959. United States

Documents
Document Sharing Hub

Full document details: ASTM C1242-23c

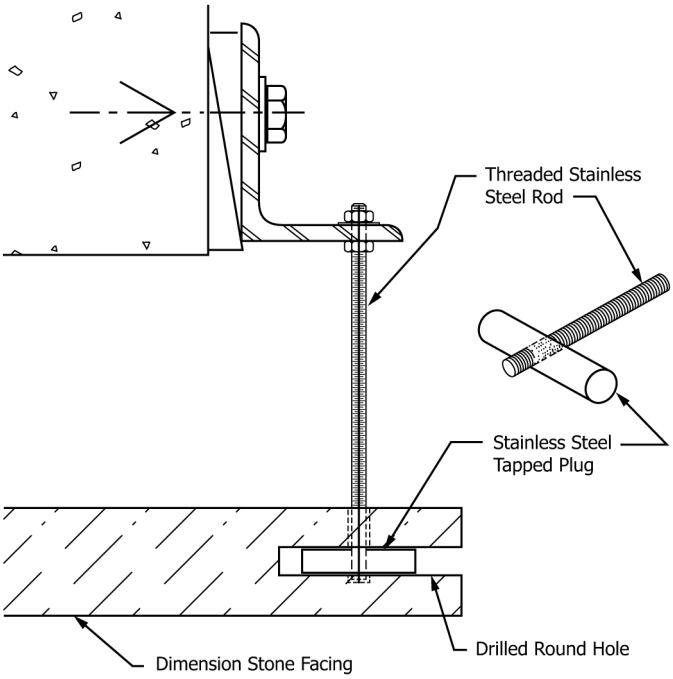

FIG. 1 Rod and Plug Anchor

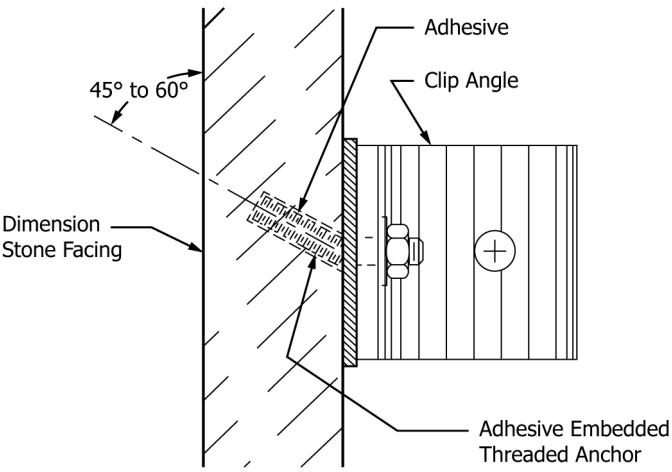

FIG. 2 Adhesive Embedded Threaded Anchor

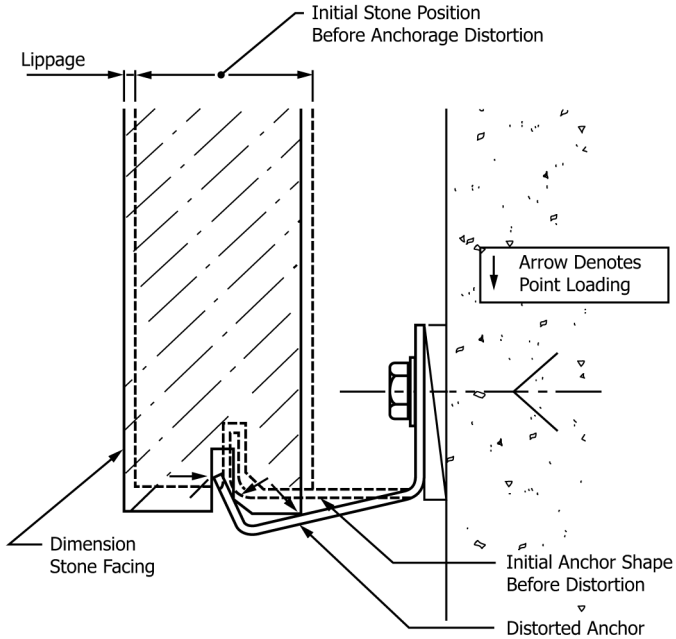

FIG. 3 Point Loading Prevention

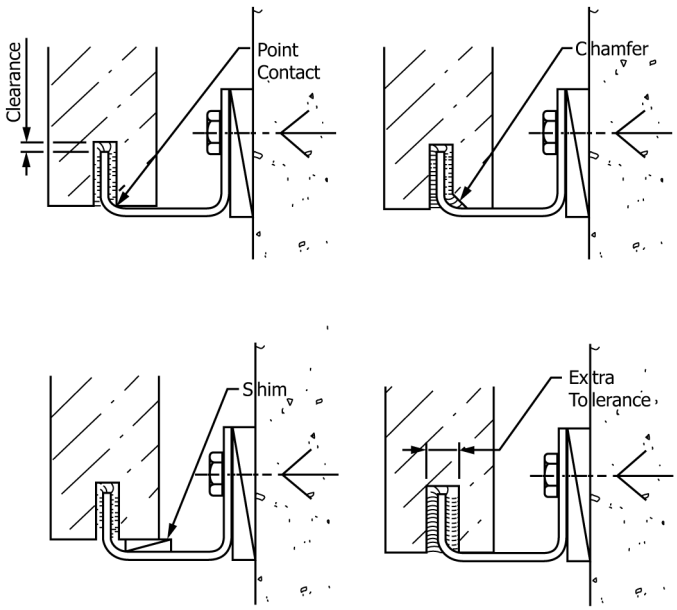

FIG. 3 Point Loading Prevention *(continued)*

Development of International Standards, Guides and Recommendations issued by the World Trade Organization Technical Barriers to Trade (TBT) Committee.

2. Referenced Documents

2.1 *ASTM Standards:*[2]

C97/C97M Test Methods for Absorption and Bulk Specific Gravity of Dimension Stone

C99/C99M Test Method for Modulus of Rupture of Dimension Stone

C119 Terminology Relating to Dimension Stone

C170/C170M Test Method for Compressive Strength of Dimension Stone

C406/C406M Specification for Roofing Slate

C482 Test Method for Bond Strength of Ceramic Tile to Portland Cement Paste

C503/C503M Specification for Marble Dimension Stone

C509 Specification for Elastomeric Cellular Preformed Gasket and Sealing Material

C568/C568M Specification for Limestone Dimension Stone

C615/C615M Specification for Granite Dimension Stone

C616/C616M Specification for Quartz-Based Dimension Stone

C629/C629M Specification for Slate Dimension Stone

[2] For referenced ASTM standards, visit the ASTM website, www.astm.org, or contact ASTM Customer Service at service@astm.org. For *Annual Book of ASTM Standards* volume information, refer to the standard's Document Summary page on the ASTM website.

AVA Documents
Document Sharing Hub

Full document details: ASTM C1242-23c

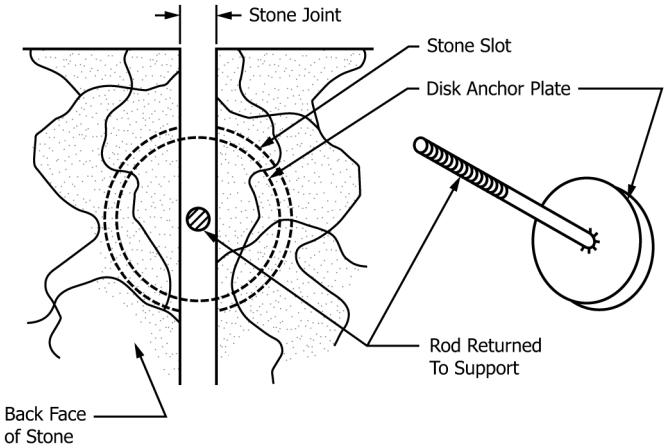

FIG. 4 Disc Anchor

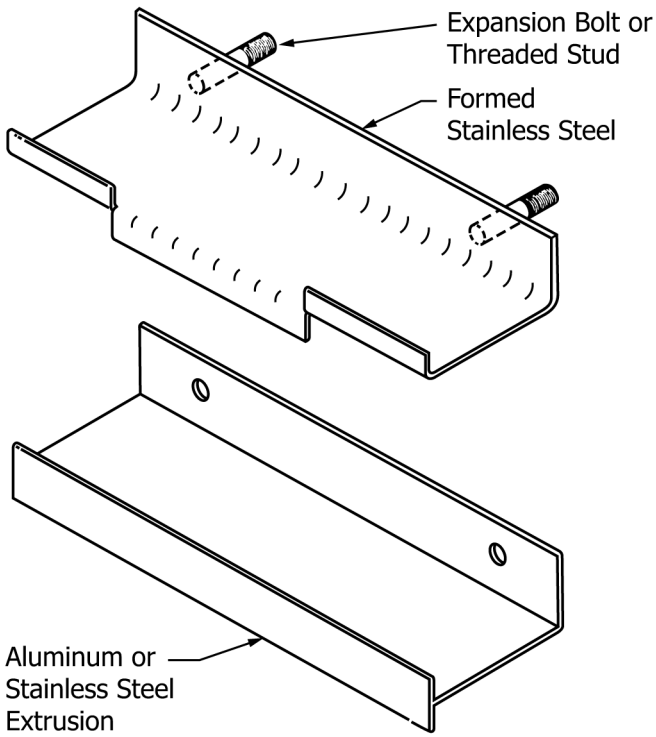

FIG. 5 Combined Anchor

C864 Specification for Dense Elastomeric Compression Seal Gaskets, Setting Blocks, and Spacers

C880/C880M Test Method for Flexural Strength of Dimension Stone

C1115 Specification for Dense Elastomeric Silicone Rubber Gaskets and Accessories

C1201/C1201M Test Method for Structural Performance of Exterior Dimension Stone Cladding Systems by Uniform Static Air Pressure Difference

C1354/C1354M Test Method for Strength of Individual Stone Anchorages in Dimension Stone

C1496 Guide for Assessment and Maintenance of Exterior Dimension Stone Masonry Walls and Facades

C1526 Specification for Serpentine Dimension Stone

TABLE 1 Dimension Stone Specifications

Stone Type	ASTM Specification
Calcite[A]	C503/C503M
Dolomite[A]	C503/C503M
Granite	C615/C615M
Limestone[B]	C568/C568M
Marble (exterior)[B]	C503/C503M
Quartz-Based[B]	C616/C616M
Quartzite[A]	C616/C616M
Quartzitic Sandstone[A]	C616/C616M
Sandstone[A]	C616/C616M
Serpentine[A]	C503/C503M
Serpentine	C1526
Slate (roof)	C406/C406M
Slate (walls)	C629/C629M
Travertine[A]	C1527/C1527M

[A] This stone type is a subclassification.
[B] This stone type has subclassifications or grades.

TABLE 2 Dimension Stone Test Methods

Measures	ASTM Test Method
liquid porosity and relative density	C97/C97M
combined shear with tensile unit strength from bending	C99/C99M
ultimate crushing unit strength	C170/C170M
primary tensile unit strength from bending	C880/C880M
capacity and deflections of panels assembled with their anchors onto their supporting backup structure	C1201/C1201M
individual anchor strength	C1354/C1354M
accelerated production of service life	E632

C1527/C1527M Specification for Travertine Dimension Stone

E632 Practice for Developing Accelerated Tests to Aid Prediction of the Service Life of Building Components and Materials

3. Terminology

3.1 *General Definitions*—For definitions of terms used in this guide, refer to Terminology C119.

3.2 Specific definitions used in the design process are listed in 7.4.

4. Significance and Use

4.1 This guide is intended to be used by architects, engineers, and contractors who either design or install exterior stone cladding for architectural structures.

4.2 This guide is an industry standard for engineering design considerations, documentation, material considerations, anchor type applications, and installation workmanship to assist designers and installers to achieve a proper and durable stone cladding.

4.3 Stone and its support systems are part of a building's skin and shall be compatible with the behavior and performance of other interfacing systems, such as the curtainwall and superstructure frame.

4.3.1 Every stone work application shall comply with applicable building codes.

4.3.2 It is not the intent of this guide to supersede published recommendations for specific stone types. Provisions of other dimension stone industry publications should be reviewed and considered in addition to this guide's recommendations. All

AVA Documents
Document Sharing Hub

Full document details: ASTM C1242-23c

industry information should be considered with respect to project specifications and requirements. If provisions of such publications differ from those in this guide, it is acceptable practice to follow the publication's provisions if recommended by the stone specialist defined in 4.4 for the specific conditions of the individual project.

4.3.3 Because stone properties vary, the range and variability of pertinent properties of the stone proposed for use should be determined by testing and statistical methods that are evaluated using sound engineering principles. Use recent test data where applicable. Always reference proven performance of relevant existing structures.

4.3.4 Changes in properties over time shall be considered.

4.3.5 Overall behaviors of all building systems and components including the stone shall be interactively compatible.

4.4 *Stone Specialist*—Some conditions require professional expertise to select and plan a proper anchoring system, establish appropriate testing requirements, interpret tests, design and engineer the anchoring system, or monitor its fabrication and installation. A specialist is a person that complements the capabilities of the project team by contributing specific expert experience with the use, selection, design, and installation of dimension stone.

4.4.1 Particular conditions where special expertise is suggested to achieve a reliable installation:

4.4.1.1 Where complex connections or anchoring methods of unknown or questionable performance records are likely to be considered or specified;

4.4.1.2 Where the performance record of the specified systems and materials is not known or questionable;

4.4.1.3 When multiple cladding materials occur on the same facade;

4.4.1.4 If the supporting structure or backup is more flexible than L/600 in any direction;

4.4.1.5 If extreme loading could be caused by seismic, hurricane, tornado, or installation and handling methods;

4.4.1.6 When special building code requirements prevail;

4.4.1.7 If provisions of stone industry publications or project specifications differ from this guide.

5. Selection Considerations

5.1 Review the following factors before selecting a stone material, an anchoring system and subframe system from those options being considered:

5.1.1 Have the stone materials under consideration performed well on existing buildings in similar exposures?

5.1.2 Have the different anchoring and subframe systems under consideration performed well on existing buildings in similar exposures?

5.1.3 How is the performance of the anchor and its engagement into the stone affected by installation and handling procedures?

5.1.4 How are the performance and appearance of the subframe, the anchor's connection to the subframe, and the subframe's connections to the building structure affected by differential movements?

5.1.5 Do the physical characteristics of the stone measured by standard tests show the material has structural limitations? Which physical properties are important to the application, and which test methods measure those properties and their variability? Refer to Table 2 for standard test methods and properties they measure.

5.1.6 Do the physical characteristics of the stone not measured by standard tests suggest the material may have long-term durability concerns? Other properties, including (but not limited to) resistance to chemical attack, weather-related strength reduction, and dimensional changes, might be evaluated by special laboratory tests designed to obtain data under simulated conditions.

5.1.7 Does the project location or shape develop exceptional design wind, or seismic loads, or does the stone material require higher safety factors than other stones not anticipated by statutory codes?

5.1.8 Do the anchor and subframe system accommodate building dimensional changes caused by wind and seismic sway, thermal and elastic deformation, creep and shrinkage, and their combined effects?

5.1.9 Will contiguous facade elements such as windows, other claddings, window supports, or window-washing and wall maintenance provisions influence the stone cladding, its anchoring or subframe system?

5.1.10 Do the anchor or subframe systems penetrate waterproofing, facilitate internal moisture collection, or penetrate wall insulation and cavity ventilation?

5.1.11 Do the materials used resist corrosion, galvanic and chemical reactions?

5.2 The following general rules are helpful in the design of stone attachments:

5.2.1 The simplest connections are usually the best.

5.2.2 Make anchorages with the fewest components.

5.2.3 Use the fewest feasible anchor types in any particular project.

5.2.4 Provide for adjustability in anchorages to accommodate tolerances in stone and anchor materials, backup conditions, and methods of installation.

5.2.5 Support the stone's weight by direct bearing on the anchorage or by the adhesive mortar's voidless mechanical interlock into expanded lath. Connect the anchorage or lath directly to backup without allowing vertical downward movement that could induce distress.

5.2.6 Minimize eccentricity from backup to bearing or lath to eliminate vertical movement that could induce distress.

5.2.7 When bearing stone on anchors, distribute the stone weight on no more than two locations where possible onto appropriately-sized shims.

5.2.8 Make anchor locations accessible to the craftsman.

5.2.9 Design anchorage components and kerfs, holes, and undercuts in the stone to avoid entrapping moisture.

5.2.10 At friction connections with slotted holes parallel to the direction of load, specify proper fasteners, washers, slot size, and bolt installation procedure. Properly torque fasteners or use other means to negate slip.

5.2.11 Where feasible and advantageous to cladding integrity, anchor each stone panel individually to permit its differential movement independent of its surrounding panels or other work.

AVA Documents
Document Sharing Hub

Full document details: ASTM C1242-23c

5.2.12 Where not feasible and advantageous to anchor each stone panel individually, stack courses by vertically aligning bearing shims or placing a continuous mortar bed in horizontal joints and provide sufficient provisions to accommodate differential movement between stacked areas that will move together.

5.3 *Safety Factors*—In order to design an anchoring system, the variabilities of the materials being considered should be known and compensated. This is accomplished through the use of an appropriate safety factor to be applied to the stone, the anchorage, and the backup structure.

5.3.1 Table 3 shows generally accepted Safety Factors for stone cladding by stone type. Past successful practice, industry specialists, and association publications establish and recognize these recommended factors. These factors are based on a maximum coefficient of variation of 20 % when samples produced from material representative of that to be provided to a specific project are tested in accordance with Test Method C880/C880M or Test Method C99/C99M for sedimentary stones in thicknesses of 2 in. (50 mm) or greater. Safety factors could be changed when conditions listed under 5.3.2 or 5.3.3 exist in the project.

5.3.2 *Exemplar Availability:* A safety factor could be modified if the long-term performance of the stone material, anchor and backup system cannot be verified by well-performing exemplars. Consult a stone specialist as defined in 4.4 for the appropriate change in safety factor.

5.3.3 *Structural Variables:* A safety factor could be modified if specific conditions exist on the project different from those upon which Table 3 values are based. Consult a stone specialist as defined in 4.4 for the appropriate change in safety factor. Some specific conditions are:

5.3.3.1 Critical material strength tests show increased variability;

5.3.3.2 Life expectancy of project exceeds forty years;

5.3.3.3 Stone material loses significant strength over time;

5.3.3.4 When designing stone at anchors;

5.3.3.5 Anchor capacity tests show increased variability;

5.3.3.6 Anchors will not be inspected in final position on building;

5.3.3.7 Anchors require varied installation techniques or varied positions;

5.3.3.8 Panel is used in higher-risk position such as a soffit, overhang, liner block, assembled on backup before being erected or other similar position.

6. Anchor Types

6.1 The following descriptions apply to components potentially common to all anchor types:

TABLE 3 Generally Accepted Safety Factors for Stone Cladding by Stone Type

Stone Type	Specification	Safety Factor
granite	C615/C615M	3
limestone	C568/C568M	6
group A marble	C503/C503M	5
travertine	C1527/C1527M	8
sandstone	C616/C616M	6
slate	C629/C629M	5

6.1.1 Connect all anchors to a stable backup. A stable backup provides sufficient strength and stiffness to resist forces, rotations and displacements induced by the anchor as it transfers reactions from the stone panel to the backup to sustain the structural integrity of the stone cladding. Strength and stiffness must also be sufficient to prevent stress concentrations that could compromise capacity, so the stone cladding system can perform as engineered.

6.1.2 Place structural shims between the anchor and backup to accommodate variances in position between the finished stone panel's position and actual location of the backup. Shims must possess permanent structural properties sufficient to transfer forces while resisting rotations and displacements between the anchor and backup that could compromise the anchor or fastener capacity, or its intended position. Insulation, waterproofing, compressible or elastomeric layers not possessing sufficient structural properties should not be used as shims, and should not be sandwiched between anchors and backup at bearing surfaces. Unintended slip at adjustment slot, whether in the vertical, horizontal, or diagonal direction, should be prevented by use of a weld washer, interlocking serrated faces, or other mechanical means.

6.1.3 Where required to adjust the stone panel's height during setting, place structural shims between the stone and anchor to accommodate variances in position between the finished stone panel's position and actual location of the anchor. Shims must possess permanent structural properties sufficient to transfer forces while allowing rotations and slight displacements between the anchor and stone panel that, if restricted, could induce prying and compromise the anchor or stone's capacity where it is engaged by the anchor.

6.2 *Cast-in Anchorage* (refer to Fig. 6 and Fig. 7):

6.2.1 Engage panel with anchor comprised of a spring-clip hairpin (Fig. 6) or pairs of dowels, threaded rods, or bolts (Fig. 7) made of materials following 8.1 "Metals" into holes bored into the backside of stone panel. Avoid anchor misalignment in hole to reduce resulting prying on stone panel or unintended load path.

6.2.2 Transfer lateral and gravity reactions from stone to backup with anchor shown. Orient anchors in horizontal plane, perpendicular to gravity load whenever possible, without pointing downward in its final installed position. Slant and oppose direction of holes to mechanically lock stone panel onto backup. When anchoring downward-facing stones, ensure that anchor arrangement will effectively resist vertical and lateral reactions.

6.2.3 Size diameter and depth of anchor that engages stone to be capable of resisting intended reactions without allowing deformations that induce prying or reduce anchorage capacity. In general, number and location of anchors should be a minimum of two anchors per individual panel as anchor and panel engineering require and follow factors in Section 5, "Selection Considerations".

6.2.4 Anchor hole depth and diameter, with the anchor's embedment depth into the hole, are the critical elements determining the anchorage assembly's capacity for transferring forces from the panel to its support. Embed anchors ⅜ in. (10 mm) minimum and no more than approximately two thirds

Documents
Document Sharing Hub

Full document details: ASTM C1242-23c

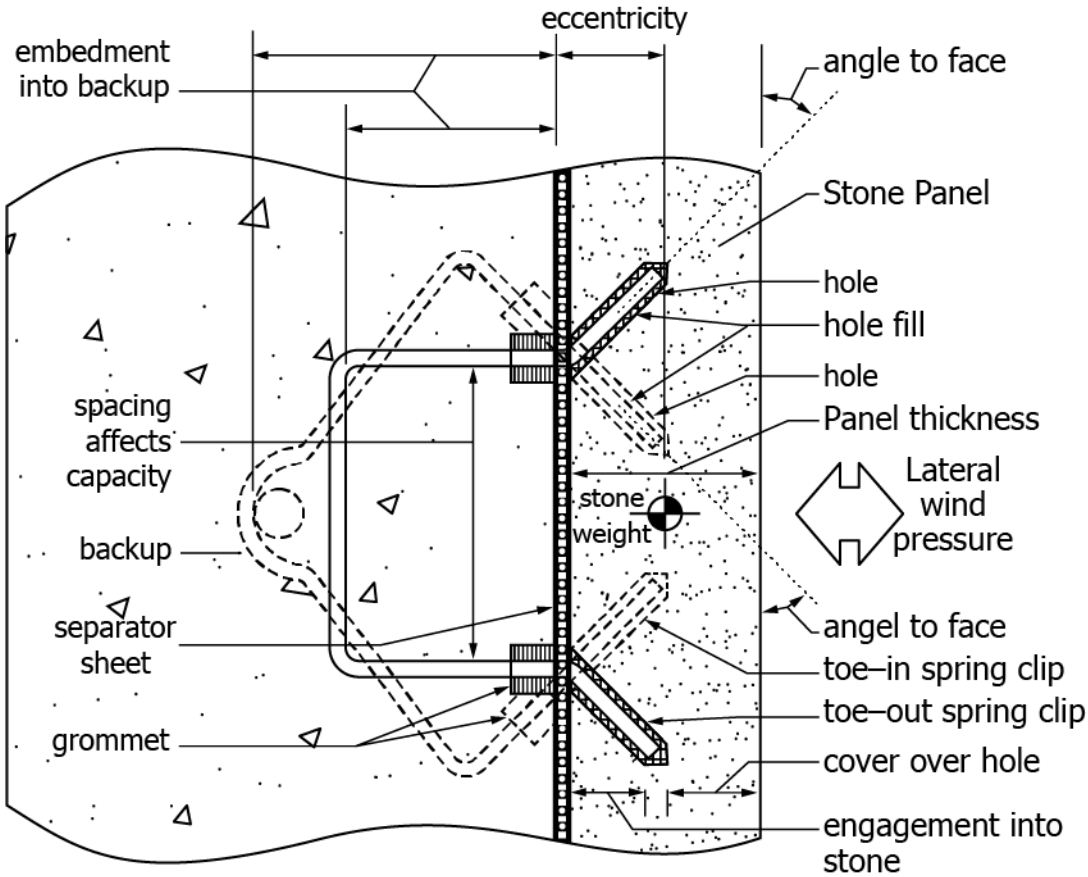

FIG. 6 Spring-Clip Cast-in Anchorage – anchor in horizontal or vertical plane can support gravity and lateral loads (prefer horizontal clip orientation to support combined loads)

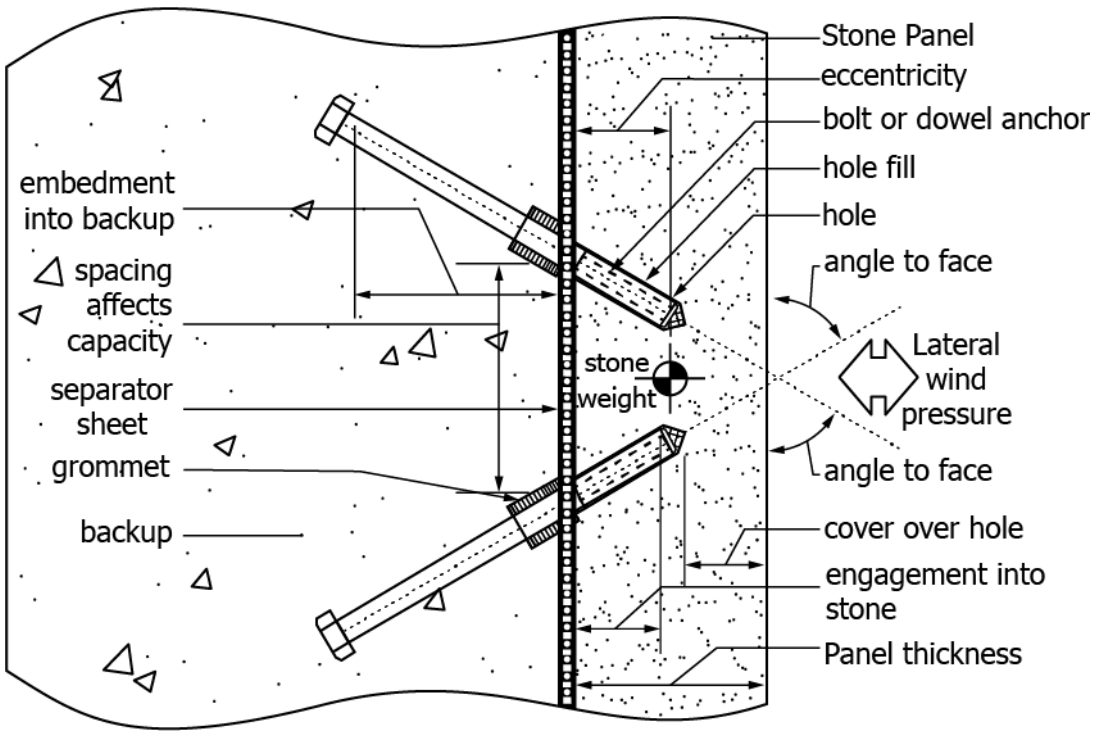

FIG. 7 Separated Pins Cast-in Anchorage – anchor in horizontal or vertical plane can support gravity and lateral loads (prefer horizontal dowel or bolt orientation to support combined loads)

Documents
Document Sharing Hub

Full document details: ASTM C1242-23c

the panel thickness in panels up to 3 in. (75 mm) thick. For panels thicker than 3 in. (75 mm), embed anchors no more than approximately one-half the panel thickness. Test specific configurations by Test Method C1354/C1354M to confirm capacity and optimize configuration.

6.2.5 Provide minimum ⅜ in. (10 mm) stone cover over hole to help avoid rupturing the exposed face during boring or spalling or staining from absorbed moisture.

6.2.6 Bore hole for anchor with non-percussive tool using an apparatus to maintain consistent angularity to guide the bore accurately. Slant holes to an angle of 45° to 60° to the face. Size hole diameter for minimum clearance around anchor, commonly 1⁄32 in. (1 mm) larger than the anchor diameter. However, hole size and alignment must allow anchor to be installed to its required embedment.

6.2.7 If required to reduce risk of water entry that might stain stone, or freeze and expand to possibly damage stone, fill the gap between the hole in the stone and anchor with non-staining and non-migrating material such as compressible low-modulus sealant. Polyester or epoxy resins may be used if their thermal and moisture expansion properties, compressibility, annular volume, and other factors do not risk damaging the stone in its exposure. The fill also distributes bearing of anchor on sides of hole to reduce point bearing and stress concentrations. Do not rely solely on adhesives to support stone.

6.2.8 To prevent adhesion between the stone panel and backup and minimize water absorption into backup, place a continuous polyethylene separator sheet between the back face of stone and backup. To accommodate some movement, prevent adhesion, and reduce risk of attachment rupture if moisture collects and freezes between the stone and backup, place an expanded-type, closed-cell foam sheet between the back face of stone and backup. Protect plane from water entry and allow drainage.

6.2.9 Place compressible grommet collar on anchor to allow anchor to flex slightly to accommodate differential in-plane movements. Grommet to fit snugly onto anchor. Grommet outside diameter is nominally two times the anchor diameter. Grommet length is nominally four times the anchor diameter.

6.2.10 Before inserting anchor into hole, remove loose dust and debris from holes with compressed desiccated air and wire brush. Use minimum 3⁄16 in. (5 mm) diameter spring-clip, or minimum ¼ in. (6 mm) diameter dowel, bolt or rod. When holes are to be filled, verify holes around anchors are filled before placing separator sheet and setting grommets. Also verify anchors are embedded to full hole depth and proper alignment before casting backup.

6.2.11 Embed anchor into backup the greater of 2½ in. (60 mm), twice the anchor embedment into the stone panel, or to 1 in. (25 mm) behind and within the backup's reinforcing.

6.2.12 Engineer the backup to be stiffer than the stone panel so deformations of the backup do not induce stress into the panel or its anchors. Engineer the anchors to accommodate shrinkage, creep, fabrication and erection, handling and other in-service deformations to avoid development of secondary stresses that could compromise anchorage integrity.

6.2.13 Do not allow floor-to-floor building movements to be accommodated as movement within the holes.

6.2.14 Size joint between panels to allow for tolerances, clearances, designed movement, and capability of the joint filler. Do not accommodate movement occurring in joints in the backup with this type of anchor. Unless the project's design requires open joints, seal joints between panels with compressible, compatible sealant with proper profile over backer rod to prevent three-sided sealant bond that could cause premature sealant failure.

6.3 *Dowel Anchorage* (refer to Fig. 8 and Fig. 9)*:*

6.3.1 Engage panel with a fixed or loose dowel made of materials following 8.1 "Metals". Avoid dowel misalignment in hole and maintain clearances where shown to reduce resulting prying on stone panel or unintended load path.

6.3.2 Transfer lateral and gravity reactions (Fig. 8) or only lateral reactions (Fig. 9) from stone to backup with anchor shown as a brake-formed shape. Anchor can also be other shapes. If a slot must be used instead of a hole, prevent unintended slip at slot according to 6.1.2.

6.3.3 Size thickness and height of anchor that engages stone to be capable of resisting intended reactions without allowing deformations that induce prying or reduce anchorage capacity. Size portion of anchor carrying weight of stone to support weight without allowing deformations that induce prying or reduce anchorage capacity.

6.3.4 Place bearing shim to transfer weight of stone to anchor and adjust its height to maintain clearances where shown to avoid unintended stress or load path.

6.3.5 Minimize hole depth to improve anchor capacity. Do not allow floor-to-floor building movements to be accommodated as movement within the holes. Provide minimum ⅜ in. (10 mm) engagement or depth determined to be appropriate by testing in accordance with Test Method C1354/C1354M. Increased engagement may increase anchorage capacity, and could reduce capacity.

6.3.6 Size joint to allow for anchor, tolerances, clearances, designed movement, and capability of the joint filler. Do not accommodate movement occurring in joints in the backup with this type of anchor. Unless stone cladding system is intentionally designed with open joints, fill joints between panels with compressible gasket or compatible sealant with proper profile over backer rod. If anchor is not recessed enough to allow the backer rod to be continuous across the face-of-anchor, place bond breaker at anchor and place backer rod between anchors to prevent three-sided sealant bond that could cause premature sealant failure.

6.3.7 Provide clearance between top-of-stone and bottom-of-anchor to avoid contact and weight transfer unless cladding system is designed to stack. Clearance must allow for differential movement including thermal volume change, creep, seismic and lateral drift, fabrication and installation tolerances.

6.3.8 Provide interior edge distance, the thickness of stone from hole to back-face-of-stone, capable of resisting negative, or outward reactions, and also stone weight unless the anchor only supports lateral reactions. Maintain distance even when stone panel is at minimum overall thickness. Also provide sufficient exterior edge distance, the thickness of stone from

AVA Documents
Document Sharing Hub

Full document details: ASTM C1242-23c