This international standard was developed in accordance with internationally recognized principles on standardization established in the Decision on Principles for the Development of International Standards, Guides and Recommendations issued by the World Trade Organization Technical Barriers to Trade (TBT) Committee.

Designation: C1322 – 15 (Reapproved 2019)

Standard Practice for Fractography and Characterization of Fracture Origins in Advanced Ceramics[1]

This standard is issued under the fixed designation C1322; the number immediately following the designation indicates the year of original adoption or, in the case of revision, the year of last revision. A number in parentheses indicates the year of last reapproval. A superscript epsilon (ε) indicates an editorial change since the last revision or reapproval.

1. Scope

1.1 The objective of this practice is to provide an efficient and consistent methodology to locate and characterize fracture origins in advanced ceramics. It is applicable to advanced ceramics that are brittle; that is, fracture that takes place with little or no preceding plastic deformation. In such materials, fracture commences from a single location which is termed the fracture origin. The fracture origin in brittle ceramics normally consists of some irregularity or singularity in the material which acts as a stress concentrator. In the parlance of the engineer or scientist, these irregularities are termed flaws or defects. The latter word should not be construed to mean that the material has been prepared improperly or is somehow faulty.

1.2 Although this practice is primarily intended for laboratory test piece analysis, the general concepts and procedures may be applied to component fracture analyses as well. In many cases, component fracture analysis may be aided by cutting laboratory test pieces out of the component. Information gleaned from testing the laboratory pieces (for example, flaw types, general fracture features, fracture mirror constants) may then aid interpretation of component fractures. For more information on component fracture analysis, see Refs (**1**, **2**).[2]

1.3 *This standard does not purport to address all of the safety concerns, if any, associated with its use. It is the responsibility of the user of this standard to establish appropriate safety, health, and environmental practices and determine the applicability of regulatory limitations prior to use.*

1.4 *This international standard was developed in accordance with internationally recognized principles on standardization established in the Decision on Principles for the Development of International Standards, Guides and Recommendations issued by the World Trade Organization Technical Barriers to Trade (TBT) Committee.*

2. Referenced Documents

2.1 *ASTM Standards:*[3]

C162 Terminology of Glass and Glass Products
C242 Terminology of Ceramic Whitewares and Related Products
C1036 Specification for Flat Glass
C1145 Terminology of Advanced Ceramics
C1161 Test Method for Flexural Strength of Advanced Ceramics at Ambient Temperature
C1211 Test Method for Flexural Strength of Advanced Ceramics at Elevated Temperatures
C1239 Practice for Reporting Uniaxial Strength Data and Estimating Weibull Distribution Parameters for Advanced Ceramics
C1499 Test Method for Monotonic Equibiaxial Flexural Strength of Advanced Ceramics at Ambient Temperature
C1678 Practice for Fractographic Analysis of Fracture Mirror Sizes in Ceramics and Glasses
F109 Terminology Relating to Surface Imperfections on Ceramics

2.2 *NIST Standard:*[4]

NIST Special Publication SP 960-16 Guide to Practice for Fractography of Ceramics and Glasses (**2**)

2.3 *CEN Standard:*[5]

EN 843-6 Advanced Technical Ceramics—Mechanical Properties of Monolithic Ceramics at Room Temperature—Part 6: Guidance for Fractographic Investigation

3. Terminology

3.1 *Definitions:*

3.1.1 *General*—The following terms are given as a basis for identifying fracture origins in advanced ceramics. It should be recognized that origins can manifest themselves differently in

[1] This practice is under the jurisdiction of ASTM Committee C28 on Advanced Ceramics and is the direct responsibility of Subcommittee C28.01 on Mechanical Properties and Performance.

Current edition approved July 1, 2019. Published July 2019. Originally approved in 1996. Last previous edition approved in 2015 as C1322 – 15. DOI: 10.1520/C1322-15R19.

[2] The boldface numbers in parentheses refer to the list of references at the end of this standard.

[3] For referenced ASTM standards, visit the ASTM website, www.astm.org, or contact ASTM Customer Service at service@astm.org. For *Annual Book of ASTM Standards* volume information, refer to the standard's Document Summary page on the ASTM website.

[4] Available from National Institute of Standards and Technology (NIST), 100 Bureau Dr., Stop 1070, Gaithersburg, MD 20899-1070, http://www.nist.gov.

[5] Available from European Committee for Standardization (CEN), Avenue Marnix 17, B-1000, Brussels, Belgium, http://www.cen.eu.

Copyright © ASTM International, 100 Barr Harbor Drive, PO Box C700, West Conshohocken, PA 19428-2959. United States

Documents
Document Sharing Hub
Full document details: ASTM C1322-15(2019)

various materials. The photographs in Appendix X1 show examples of the origins defined in 3.2.1 and 3.2.12. Terms that are contained in other ASTM standards are noted at the end of the each definition. The specific origin types listed in 3.2.1 – 3.2.12 are the most common types in advanced ceramics, but by no means cover all possibilities. NIST Special Publication SP 960-16 (**2**) includes many more origin types. Subsection 3.3 provides guidance on how to characterize or define other origin types. Some common origin types are identified in 3.2.1 – 3.2.12. These origin flaws are distributed throughout the bulk (inherently volume distributed) or are distributed on an exterior surface (inherently surface distributed). The distinction is very important for Weibull statistical analysis and size scaling of strength as discussed in Practice C1239. Subsection 7.2 provides guidance on interpretation

3.1.2 *advanced ceramic, n*—a highly engineered, high-performance, predominately nonmetallic, inorganic, ceramic material having specific functional attributes. **C1145**

3.1.3 *brittle fracture, n*—fracture that takes place with little or no preceding plastic deformation.

3.1.4 *flaw, n*—structural discontinuity in an advanced ceramic body that acts as a highly localized stress raiser.

3.1.4.1 *Discussion*—The presence of such discontinuities does not necessarily imply that the ceramic has been prepared improperly or is faulty.

3.1.5 *fractography, n*—means and methods for characterizing a fractured specimen or component. **C1145**

3.1.6 *fracture mirror, n*—as used in fractography of brittle materials, a relatively smooth region in the immediate vicinity of and surrounding the fracture origin.

3.1.7 *fracture origin, n*—the source from which brittle fracture commences. **C1145**

3.1.8 *grain boundary (GB), n*—as used in fractography, a volume-distributed flaw that is a boundary facet between two or more grains.

3.1.8.1 *Discussion*—This flaw is most apt to be strength limiting in coarse-grained ceramics.

3.1.9 *hackle, n*—as used in fractography, a line or lines on the crack surface running in the local direction of cracking, separating parallel but non-coplanar portions of the crack surface.

3.1.10 *mist, n*—as used in fractography of brittle materials, markings on the surface of an accelerating crack close to its effective terminal velocity, observable first as a misty appearance and with increasing velocity reveals a fibrous texture, elongated in the direction of crack propagation.

3.2 *Common Origins:*

3.2.1 *agglomerate (A), n*—as used in fractography, a volume-distributed flaw that is a cluster of grains, particles, platelets, or whiskers, or a combination thereof, present in a larger solid mass. **C1145**

3.2.2 *compositional inhomogeneity (CI), n*—as used in fractography, a volume-distributed flaw that is a microstructural irregularity related to the nonuniform distribution of the primary constituents or an additive or second phase. **C1145**

3.2.3 *crack (CK), n*—as used in fractography, a volume- or surface-distributed flaw that is a surface of fracture without complete separation. **C1145**

3.2.4 *handling damage (HD), n*—as used in fractography, surface-distributed flaws that include scratches, chips, cracks, etc., due to the handling of the specimen/component. **C1145**

3.2.5 *inclusion (I), n*—as used in fractography, a volume-distributed flaw that is a foreign body that has a composition different from the nominal composition of the bulk advanced ceramic. **C1145**

3.2.6 *large grain(s) (LG), n*—as used in fractography, a volume- or surface-distributed flaw that is a single (or cluster of) grain(s) having a size significantly greater than that encompassed by the normal grain size distribution. **C1145**

3.2.7 *machining damage (MD), n*—as used in fractography, a surface-distributed flaw that is a microcrack(s), chip(s), striation(s), or scratch(es), or a combination of these, created during the machining process.

3.2.7.1 *Discussion*—Machining may result in the formation of surface or subsurface damage, or both. **C1145**

3.2.8 *pit (PT), n*—as used in fractography, a surface-distributed flaw that is a cavity created on the specimen/component surface during the reaction/interaction between the material and the environment, for example, corrosion or oxidation. **C1145**

3.2.9 *pore (P(V)), n*—as used in fractography, a volume-distributed flaw that is a discrete cavity or void in a solid material. **C1145**

3.2.10 *porous region (PR), n*—as used in fractography, a volume-distributed flaw that is a three-dimensional zone of porosity or microporosity. **C1145**

3.2.11 *porous seam (PS), n*—as used in fractography, a volume-distributed flaw that is a two-dimensional area of porosity or microporosity. **C1145**

3.2.12 *surface void (SV), n*—as used in fractography, a surface-distributed flaw that is a cavity created at the surface/exterior as a consequence of the reaction/interaction between the material and the processing environment, for example, surface reaction layer or bubble that is trapped during processing. **C1145**

3.3 *Miscellaneous Origins:*

3.3.1 *unidentified origin (?), n*—as used in this practice, an uncertain or undetermined fracture origin.

3.4 Other terms or fracture origin types may be devised by the user if those listed in 3.2.1 – 3.2.12 are inadequate. In such instances, the user shall explicitly define the nature of the fracture origin (flaw) and whether it is inherently volume or surface distributed. Additional terms for surface imperfections can be found in Terminology F109 and supplementary fracture origin types for ceramics and glasses may be found in Terminologies C162 and C242 and in Specification C1036. Examples of additional terms are hard agglomerate, collapsed agglomerate, hard agglomerate (CEN 843-6) poorly bonded region, glassy inclusion, chip, closed chip, chip (CEN 843-6), delamination (CEN 843-6), grain boundary cracks, chipper

AVA Documents
Document Sharing Hub

Full document details: ASTM C1322-15(2019)

cracks, sharp impact cracks, blunt impact cracks, C-cracks (ball bearings), baseline microstructural flaws (BMF), or mainstream microstructural flaws (MMF). See the "Guide to Practice for Fractography of Ceramics and Glasses" (**2**) for discussion and examples.

3.5 The word "surface" may have multiple meanings. It may refer to the intrinsic spatial distribution of flaws. The word "surface" also may refer to the exterior of a test specimen cut from a bulk ceramic or component, or alternatively, the original surface of the component in the as-fired state. It is recommended that the terms original-surface or as-processed surface be used if appropriate.

4. Summary of Practice

4.1 Prior to testing, mark the specimen or component orientation and location to aid in reconstruction of the specimen/component fragments. Marker lines made with a pencil or felt-tip marker may suffice. See Fig. 1.

4.2 Whenever possible, test the specimen(s)/component(s) to fracture in a fashion that preserves the primary fracture surface(s) and all associated fragments for further fractographic analysis.

4.3 Carefully handle and store the specimen(s)/component(s) to minimize additional damage or contamination of the fracture surface(s), or both.

4.4 Visually inspect the fractured specimen(s)/component(s) (1 to 10×) in order to determine crack branching patterns, any evidence of abnormal fracture patterns (indicative of testing misalignments), the primary fracture surfaces, the location of the mirror and, if possible, the fracture origin. Specimen/component reconstruction may be helpful in this step. Label the pieces with a letter or numerical code and photograph the assembly if appropriate.

4.5 Use an optical microscope (10 to 200×) to examine both mating halves of the primary fracture surface in order to locate and, if possible, characterize the origin. Repeat the examination of pieces as required. If the fracture origin cannot be characterized, then conduct the optical examination with the purpose of expediting subsequent examination with the scanning electron microscope (SEM).

4.6 Inspect the external surfaces of the specimen(s)/component(s) near the origin for evidence of handling or machining damage or any interactions that may have occurred between these surfaces and the environment.

4.7 Clean and prepare the specimen(s)/component(s) for SEM examination, if necessary.

4.8 Carry out SEM examination (10 to 2000×) of both mating halves of the primary fracture surface.

4.9 Characterize the strength-limiting origin by its identity, location, and size. When appropriate, use the chemical analysis capability of the SEM to help characterize the origin.

4.10 If necessary, repeat 4.6 using the SEM.

4.11 Keep appropriate records, digital images, and photographs at each step in order to characterize the origin, show its location and the general features of the fractured specimen/component, as well as for future reference.

4.12 Compare the measured origin size to that estimated by fracture mechanics. If these sizes are not in general agreement, then an explanation shall be given to account for the discrepancy.

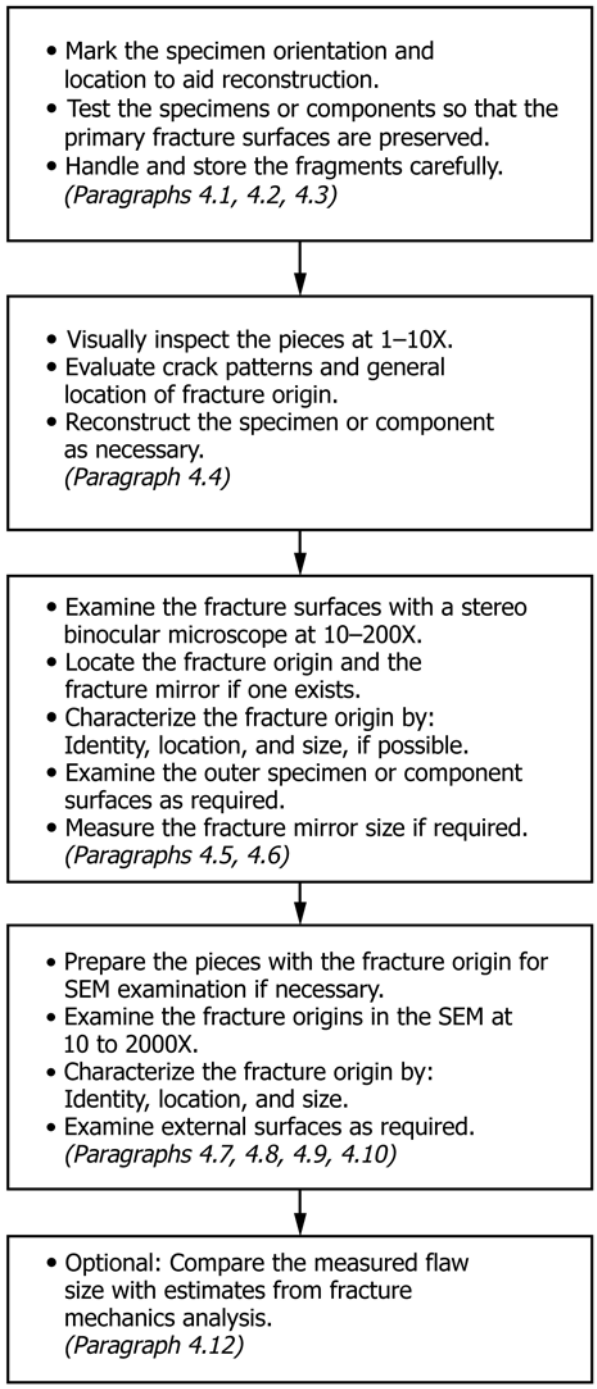

Keep appropriate records, digital images, and photographs at each step to assist in the origin characterization and for future reference.

FIG. 1 Simplified Schematic Diagram of the Fractographic Analysis Procedure

AVA Documents
Document Sharing Hub

Full document details: ASTM C1322-15(2019)

4.13 For a new material, or a new set of processing or exposure conditions, it is highly recommended that a representative polished section of the microstructure be photographed to show the normal microstructural features such as grain size, porosity, and phase distribution.

5. Significance and Use

5.1 This practice is suitable for monolithic and some composite ceramics, for example, particulate- and whisker-reinforced and continuous-grain-boundary phase ceramics. (Long- or continuous-fiber reinforced ceramics are excluded.) For some materials, the location and identification of fracture origins may not be possible due to the specific microstructure.

5.2 This practice is principally oriented towards characterization of fracture origins in specimens loaded in so-called fast fracture testing, but the approach can be extended to include other modes of loading as well.

5.3 The procedures described within are primarily applicable to mechanical test specimens, although the same procedures may be relevant to component fracture analyses as well. It is customary practice to test a number of specimens (constituting a sample) to permit statistical analysis of the variability of the material's strength. It is usually not difficult to test the specimens in a manner that will facilitate subsequent fractographic analysis. This may not be the case with component fracture analyses. Component fracture analysis is sometimes aided by cutting test pieces from the component and fracturing the test pieces. Fracture markings and fracture origins from the latter may aid component interpretation.

5.4 Optimum fractographic analysis requires examination of as many similar specimens or components as possible. This will enhance the chances of successful interpretations. Examination of only one or a few specimens can be misleading. Of course, in some instances the fractographer may have access to only one or a few fractured specimens or components.

5.5 Successful and complete fractography also requires careful consideration of all ancillary information that may be available, such as microstructural characteristics, material fabrication, properties and service histories, component or specimen machining, or preparation techniques.

5.6 Fractographic inspection and analysis can be a time-consuming process. Experience will, in general, enhance the chances of correct interpretation and characterization, but will not obviate the need for time and patience. Repeat examinations are often fruitful. For example, a particular origin type or key feature may be overlooked in the first few test pieces of a sample set. As the fractographer gains experience by looking at multiple examples, he or she may begin to appreciate some key feature that was initially overlooked.

5.7 This practice is applicable to quality control, materials research and development, and design. It will also serve as a bridge between mechanical testing standards and statistical analysis practices to permit comprehensive interpretation of data for design. An important feature of this practice is the adoption of a consistent manner of characterizing fracture origins, including origin nomenclature. This will further enable the construction of efficient computer databases.

5.8 The irregularities which act as fracture origins in advanced ceramics can develop during or after fabrication of the material. Large irregularities (relative to the average size of the microstructural features) such as pores, agglomerates, and inclusions are typically introduced during processing and can (in one sense) be considered intrinsic to the manufacturing process. Other origins can be introduced after processing as a result of machining, handling, impact, wear, oxidation, and corrosion. These can be considered extrinsic origins. However, machining damage may be considered intrinsic to the manufacturing procedure to the extent that machining is a normal step of producing a finished specimen or component.

5.9 Regardless of how origins develop, they are either inherently volume distributed throughout the bulk (for example, agglomerates, large grains, or pores) or inherently surface distributed (for example, handling damage, pits from oxidation, or corrosion). The distinction is a consequence of how the specimen or component is prepared. For example, inclusions may be scattered throughout the bulk ceramic material (inherently volume distributed), but when a particular specimen is cut from the bulk ceramic material, the strength-limiting inclusion could be located at the specimen surface. This may frequently occur if the specimen is very thin. Thus, in a particular specimen, a volume-distributed origin can be volume located, surface located, near-surface located, or edge located. The distinction is important for Weibull analysis and strength scaling with size as discussed in Practice C1239.

5.10 As fabricators improve materials by careful process control, thus eliminating undesirable microstructural features, advanced ceramics will become strength-limited by origins that come from the large-sized end of the distribution of the normal microstructural features. Such origins can be considered mainstream microstructural features. In other instances, regions of slightly different microstructure (locally higher microporosity) or microcracks between grains (possibly introduced by thermoelastic strains) may act as fracture origins. These origins will blend in well with the background microstructure and will be extremely difficult or impossible to discern, even with careful scanning electron microscopy. This practice can still be used to analyze such fracture origins, but specific origin definitions may need to be devised.

5.11 This practice is compatible with CEN Standard EN 843 Part 6.

6. Apparatus

6.1 *General*—Examples of the equipment described in 6.2 – 6.6 are illustrated in Appendix X4 and also the NIST Special Publication SP 960-16 (**2**).

6.2 *Binocular Stereomicroscope,* with adjustable magnification between 10 to 200× and directional light source (see Fig. X4.1). A camera or video monitor system used with this microscope is a useful option (see 6.6 and Fig. X4.2). Basic binocular stereomicroscopes have magnification ranges to the eyes of about 8 to 32× or 10 to 40×, but these limit one's view of a small fracture origin flaw and greater magnifications are needed. Stereomicroscopes with upper magnifications of 100× or as high as 300× (available with many stereomicroscopes) are

AVA Documents
Document Sharing Hub

Full document details: ASTM C1322-15(2019)

more suitable for fractographic analysis. On the other hand, having a small magnification at the lowest limit (e.g., 5×) facilitates taking an overall picture of a small component. Hence, a stereoptical microscope with a broad zoom range (e.g., range of 10, 16, or even 20 power) is very advantageous. A 50/50 beam splitter (half the light is sent to the eyes and half is sent to the camera) in the stereo binocular microscope is very desirable since it allows one to look through the eyepieces at the same time an image is sent to the camera. The alternative, a lever which diverts light either to the eyes or to the camera, is cumbersome and less desirable. See the NIST Special Publication SP 960-16 (**2**) for additional information.

6.3 *Cleaning and Preparation Equipment,* such as an ultrasonic bath and a diamond cut-off wheel.

6.4 *Scanning Electron Microscope (SEM),* with energy or wavelength dispersive spectroscopy (see Fig. X4.3).

6.5 *Peripheral Equipment,* such as hand magnifying lens; 5×, 7×, or 10× inspection loupe; tweezers; grips; felt-tip pens; and compressed air, as shown in Fig. X4.4.

6.6 *Digital Camera for the Binocular Stereomicroscope*—Digital cameras have largely replaced older video cameras or films and negatives. It is optimal to mount such a camera with a dedicated camera port module in the microscope body, rather than an attachment directly onto an eyepiece. An adaptor lens at the camera port may be needed to ensure that the field of view as seen by the eyepieces is comparable to that imaged by the camera. CCD or CMOS chip cameras are commonly used. Experience has shown that a digital camera chip with 2 to 5 million pixels is adequate for most applications. The most common image formats in 2015 are JPEG and TIFF. Image compression should be minimized or not used at all when capturing and saving images. (Sometimes excessive emphasis is placed on having large pixel counts in digital cameras. There is no harm in having digital cameras with larger pixel counts, but storing and handling very large files might become cumbersome, especially if the images are embedded in documents. Nearly all the images in NIST Special Publication SP 960-16 (**2**) were captured with a digital camera having a color mosaic chip having 2 megapixels on the CCD chip.) Although stereoptical microscopes have good depth of field, it can even be further enhanced by modern, effective, and inexpensive software that allows "focus stacking" or "z-axis stacking" of a series of digital images (e.g., 10 to 20 images). A series of images are taken at slightly different z heights above a specimen. The software takes the in-focus portions of each image and combines them into a single focused image in seconds.

6.7 *Digital Camera for Overall Macrophotography*—Simple consumer digital cameras or even cell phone cameras are very useful for photographing the overall component or specimen.

6.8 *Digital Microscope (also known as a USB microscope)*—This is a digital microscope that connects to a computer. They are a new technology that is becoming increasingly common. They can range from inexpensive, low-power, handheld models to elaborate, high-power, expensive models mounted on a rigid platform with z-axis control and digital image stitching capabilities. It may be difficult to obtain sharp, focused images with the simpler models that are hand held or on simple stands. One limitation to all of them is illumination, which is usually provided by built-in light emitting diodes surrounding the lens. This limits their ability to highlight or even discern critical fracture surface features. For example, shadowing, or vicinal illumination, which is essential for ceramic examination and fracture mirror examination, is difficult or impossible with digital microscopes. Another severe limitation is obtaining images with accurate magnifications or magnification markers.

7. Detailed Procedures and Characterization

7.1 *Procedure:*

7.1.1 *General*—Location, identification, and characterization of fracture origins in advanced ceramics can sometimes be accomplished using simple optical microscopy techniques, though it more often requires scanning electron microscopy (SEM). It may not be feasible, practical, or even necessary to examine all fracture surfaces with the SEM. The extent of fractographic analysis required will depend upon the purpose of the analysis and the fractographic conduciveness of the material. Additional information on inspection techniques may be found in NIST Special Publication SP 960-16 (**2**).

7.1.1.1 The nature of the fractographic analysis will depend on whether the results will be used for quality control, materials research and development, or design. Table 1 gives

TABLE 1 Suggested Sampling Guidelines

Level	1 to 10× Visual	10 to 200× Optical	10 to 2000× SEM
Level 1			
Quality control	Specimens that fail to meet minimum strength requirements	Specimens that fail to meet minimum strength requirements	Optional
Level 2			
Quality control Materials development	All specimens	All specimens, if possible. Always both fracture halves.	Representative specimens, for example: —2 of each origin type —the 5 lowest strength specimens —at least 2 optically unidentifiable origins, if present
Level 3			
Materials development Design	All specimens	All specimens, if possible. Always both fracture halves.	All specimens, or as many specimens as necessary such that combined optical and SEM characterize 90 % (100 % for design) of all identifiable origins

AVA Documents
Document Sharing Hub

Full document details: ASTM C1322-15(2019)

suggested sampling guidelines for medium- to high-strength advanced ceramics.

7.1.1.2 The fractographic analysis will also depend on the conduciveness of the material to this analysis. Some ceramics are easy to analyze; fracture origins are readily visible with an optical microscope and the SEM is not needed. Alternatively, origins may be too small to discern with an optical microscope, difficult to differentiate from the normal microstructure, or too difficult to see in some translucent materials, thus, the SEM examination is necessary. Coarse-grained or porous materials may have no fractographic markings that permit origin identification, and optical and SEM microscopy will prove useless.

7.1.2 An origin type may not reveal itself clearly in some specimens and may only be detected after a number of examples are viewed and a pattern begins to emerge. It is often necessary to reexamine many of the specimens and reevaluate the initial appraisal. Fractographic interpretations based on only one or a few specimens can be very misleading. The examination of all specimens shall include the examination of both mating halves of the primary fracture surface irrespective of the purpose of the fractographic analysis.

7.1.3 To maximize the amount of information obtained from a fractographic exercise, care shall be taken in all steps starting with the initial testing of the specimen or component.

7.1.4 Specimens that fail during machining, handling, or without measurement of a fracture stress should be examined to determine the fracture origins. The fact that these types of fracture occurred should be noted and reported.

7.1.5 *Mechanical Testing*—A few simple precautions should be taken prior to breaking the specimen. The test site should be kept clean to minimize pickup of contaminants. Markings of some sort should be placed on the specimen to maintain a point of reference and to aid in the reconstruction of the specimen. The markings shall not damage the specimen or lead to contamination of the fracture surfaces. A fine pencil or felt-tip marker line is often sufficient to mark the inner gage length in a flexural strength specimen. The tension and compression sides of the specimen may also be marked. A circular direct tension strength specimen may be marked with a zero-degree reference. Testing that allows the broken fragments of the specimen to hurtle about shall be avoided. Incidental impact damage to the fracture surfaces can destroy the origin, alter its appearance, or cause secondary fractures. A compliant material that covers the hard surfaces of the fixture or prevents pieces from flying about, or both, is sufficient to minimize this damage. All fragments from the broken specimen shall be retained for reconstruction, unless it can be positively established that some pieces are incidental or trivial. In some cases, tape may be applied to a test piece prior to testing in order to hold fragments together after fracture. Tapes shall not be applied to tensile-loaded specimen surfaces, nor shall they interfere with the application of forces or loads on the test piece. For example, portions of the back (compression) surface of a biaxial disk specimen for ring-on-ring testing may be taped, but the annular region where the inner loading ring contacts the test piece should be left untaped.

7.1.6 *Handling and Storage*—Broken specimens shall be handled and stored so as to minimize the possibility of damage or contamination of the fracture surfaces, or both. Avoid handling the specimen, especially the fracture surface, with your hands. Body oils and skin fragments can easily change or obscure the character of the fracture surface. During reconstruction of the specimen, minimize rubbing the fragments together since this may abrade or chip the fracture surfaces, and damage the fracture surface. Avoid picking or even touching the fracture surface with sharp instruments such as tweezers, as this may alter or contaminate the fracture surface. The specimen shall be stored in a clean and orderly fashion, as much time can be lost trying to sort out mixed-up specimens. Store the specimen and fragments in containers that will minimize additional damage or contamination.

NOTE 1—The laboratory environment contains a myriad of materials such as ceramic-based clays, waxes, adhesives, and resins that should be avoided wherever possible. Many of these materials, once they are affixed to the specimen, are very tenacious and often impossible to remove.

7.1.7 *Visual Inspection and Specimen or Component Reconstruction (1 to 10×)*—Visually examine the fragmented specimen/component pieces in order to find the primary fracture surfaces, the general region of the fracture origin, and if possible, the fracture mirror. Hand magnifiers or inspection loupes can be helpful. Reconstruct the specimen if necessary, but take care to avoid damaging the fracture surfaces of pieces that have the prospective fracture origin. Reconstruction is valuable in observing the crack(s) and crack branching patterns which, in turn, helps determine the primary fracture surfaces and can help assess the stress state if it is not known. Special emphasis should be on determining whether the fracture pattern indicates misalignments or breakages at test grips (in tension), at stress concentrators (neck region in tension), or load application points (in flexure and disk tests).

7.1.7.1 Crack patterns can range from very simple to quite complex depending upon the specimen or component geometry and the stress states in the body. Multiple fractures are common to high-strength ceramics that store large amounts of elastic energy during testing. Upon fracture, this energy is released and reflects from free surfaces back through the body of the material causing additional fractures. Appendix X6 shows many potential fracture patterns in some common test specimens. A hierarchy or sequence of crack propagation can assist in backtracking to the primary fracture surfaces. Crack branching can be used to determine the direction of crack propagation, which may be denoted by "dcp." A traveling macrocrack will typically branch into successively more cracks and will rarely rejoin another crack to form a single crack (see Fig. 2). A crack that intersects another crack at angles close to 90° and stops (does not continue into an adjacent piece) will usually be a secondary crack that can be quickly eliminated since it will not contain the fracture origin. For specimens that do not show macroscopic crack branching, incipient branching in the form of shallow cracks can often be found along the edge of the main crack on the exterior surface. As with the macroscopic cracks, the angle of these shallow cracks in relation to the main crack indicate the local direction of crack

Document Sharing Hub

Full document details: ASTM C1322-15(2019)

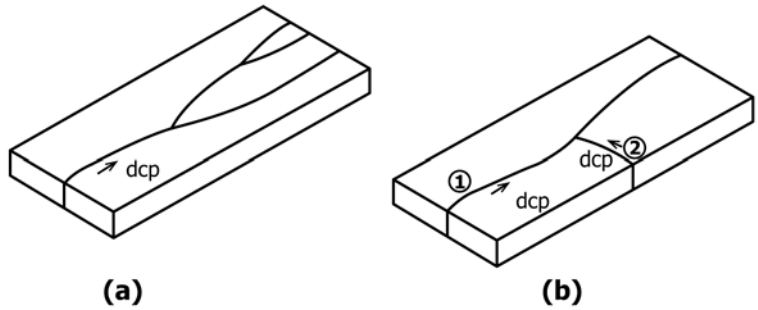

(a) shows crack branching and the arrow shows the direction of crack propagation (dcp).

(b) shows a crack intersection with the first crack labeled 1, and the secondary crack, labeled 2, which ran over and stopped at the intersection.

FIG. 2 Schematic of Typical Fracture Patterns

growth. Vicinal illumination or dye penetrants, or both, may be used to make these cracks more easily discernible.

7.1.7.2 Misalignment or deviation from the assumed stress state can be discerned by fracture surfaces that are at an irregular angle (not 90°) to the anticipated maximum principal stress. Branching angles can be helpful in detecting multiaxial stress states. Frequent breakage at test grips (in tension), at stress concentrators (neck region in tension), or load application points (in flexure and disk tests) may indicate misalignment.

7.1.7.3 The detection of the general region of the fracture origin, and the fracture mirror if present, during visual examination depends on the ceramic material being analyzed. Dense, fine-grained, or amorphous ceramics are conducive to fractography and will leave distinct fracture markings (hackle and mirror) which will aid in locating the origin (see Fig. 3). Hackle lines and ridges on the fracture surface are extremely helpful in locating the general vicinity of a fracture origin, even when a fracture mirror is not evident (Fig. 4). They will radiate from, and thus point the way back to, the fracture origin. They are best highlighted by low incident angle lighting which will create useful shadows. Fracture mirrors are telltale features that are typically centered on the strength-limiting origins. If the specimen or component is highly stressed, and the material is fine-grained and dense, a distinct fracture mirror will form as shown in Fig. 3. On the other hand, lower energy fractures and those in coarse-grained or porous ceramics will not leave distinct fracture markings (Fig. 4). Coarse hackle markings or ridges can still be used to determine the vicinity of the fracture origin, especially with oblique lighting.

NOTE 2—Coarse-grained or porous materials may have no fractographic markings that permit origin identification, and optical and SEM will prove useless.

7.1.8 *Optical Microscopy (10 to 300×)*—Examine both mating halves of the primary fracture surface. This is often performed in conjunction with the visual inspection. The purpose of the optical examination is to locate the fracture origin on the primary fracture surfaces (Table 1, Levels 2–3) and attempt to characterize the origin. If characterization is not possible during this step, the optical examination helps to minimize the time spent during the subsequent SEM examination.

7.1.8.1 A stereomicroscope is preferred for examining fracture surfaces due to its excellent depth of field. Viewing will be most effective in the 10 to 300× range. A traversing stage coupled with crosshairs or a graduated reticule in the eyepiece is useful for measuring the size or area, or both, of the mirror and, if possible, the origin. Illumination should be provided by a common microscope light source with adjustable intensity and angle of incidence to provide a means of variable lighting. These variations can highlight aspects of the fracture surface that may be hidden if one is restricted to a single view. Low-angle grazing illumination (vicinal) is especially valuable in highlighting ridges, valleys, hackle lines, and other features on the fracture surface.

7.1.8.2 The specimen should be mounted to view the fracture and external surfaces. A holder, such as a simple alligator clip attached to a stand with a flexible arm and having a compliant coating or sheath covering the teeth, provides a sturdy grip (Item B in Fig. X4.4) for examination. Ceramic clays or organic waxes shall not be used because these materials can contaminate the fracture surface and are very difficult to remove. Surface contaminants such as lint and dust can be removed easily with canned or filtered compressed air. Viewing both of the mating primary fracture surfaces simultaneously can expedite and improve the quality of the analysis since what might appear to be a pore on one half may show an agglomerate on the other (flexure specimens should be mounted tensile surface-to-tensile surface). Care shall be taken so that extraneous damage is not created.

NOTE 3—Polymer-based clays may be used for mounting specimens, provided that they can be easily removed with solvents such as acetone or ethanol. The polymer clay should have an easily recognizable color, so that if it inadvertently gets onto a fracture surface, it can be easily

AVA Documents
Document Sharing Hub

Full document details: ASTM C1322-15(2019)

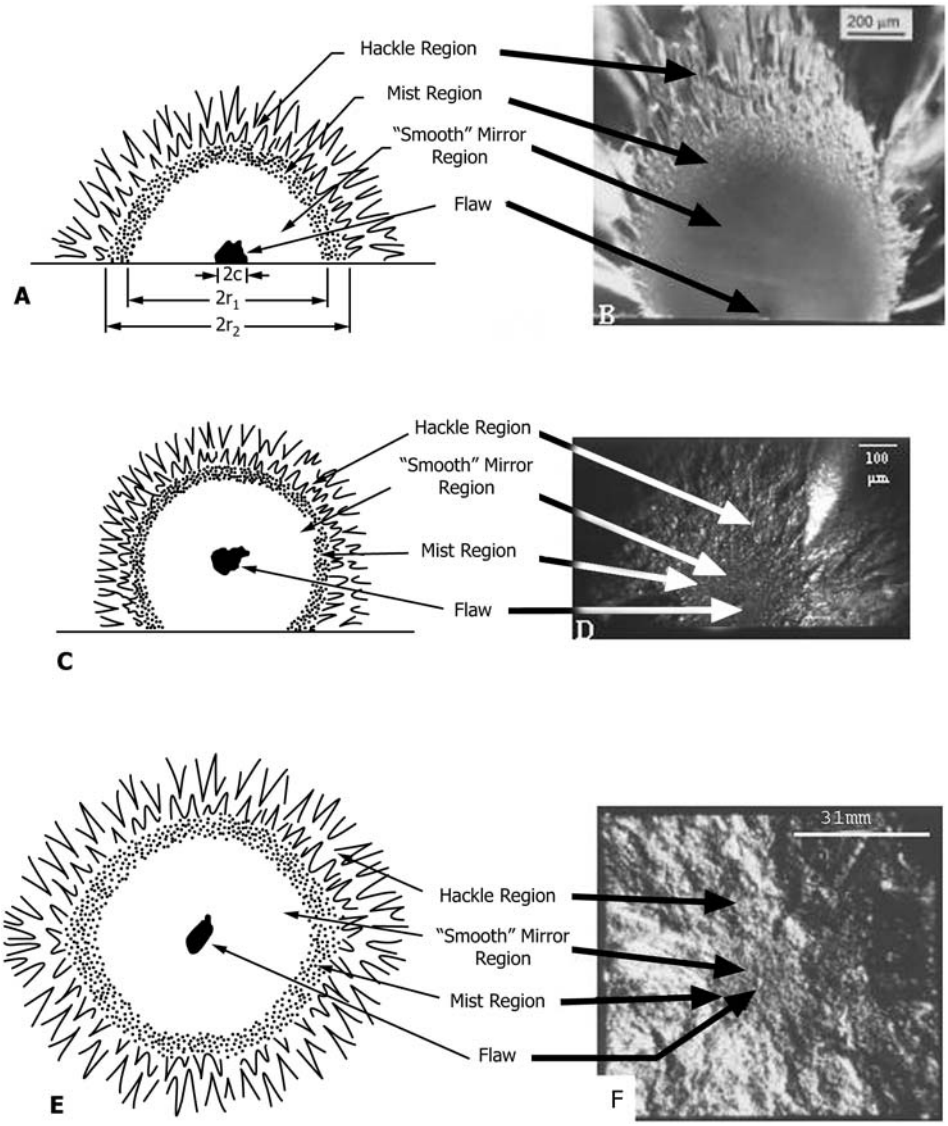

(A) A schematic of a flaw located at the surface. The flaw could either be an inherently surface-distributed flaw or an inherently volume-distributed flaw.

(B) An optical micrograph of a surface-located flaw in a biaxial borosilicate crown glass disc fractured in a biaxial ring-on-ring strength test (σ = 118 MPa).

(C) A schematic of a volume-distributed flaw.

(D) An optical micrograph of a volume-distributed flaw in a tungsten carbide specimen tested in four-point flexure (σ = 724 MPa).

(E) Schematic of a volume-distributed flaw.

(F) An optical micrograph of a volume-distributed flaw in a siliconized silicon carbide tension specimen (σ = 350 MPa).

The mirror can be centered around a portion of the origin and not the entire origin. In ceramic terminology, smooth is a relative term.

FIG. 3 Fracture Surfaces of Advanced Ceramics That Failed in a Brittle Manner

recognized and removed with the solvent.[6]

NOTE 4—Additional illumination techniques and helpful procedures are listed in X2.1.1 and NIST Special Publication SP 960-16 (**2**).

7.1.8.3 At the lowest magnification, locate the fracture mirror and origin site using the hackle on the fracture surface. In high-strength, fine-grained, and dense ceramics the origin will be approximately centered in the fracture mirror as shown

[6] Sculpey III, Oven Baked Clay by Polyform Products Company, Elk Grove Village, IL, 60007, USA is particularly effective and is easily dissolvable by acetone. It should not be baked, but used in its soft form right out of the package.

Documents
Document Sharing Hub

Full document details: ASTM C1322-15(2019)

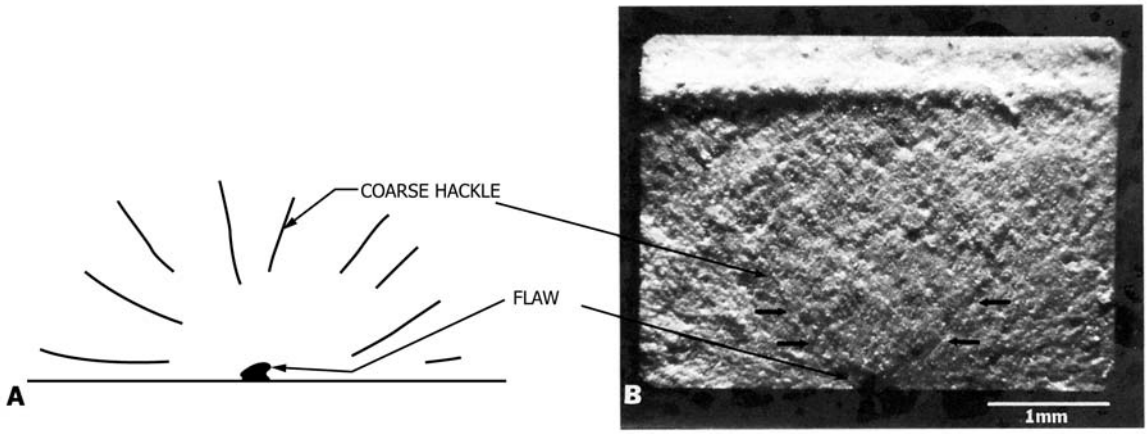

NOTE 1—The coarse hackle lines that emanate from the flaw can be used to locate the origin.

NOTE 2—The coarse hackle lines are obvious (arrows) and clearly indicate the location of the origin (a Knoop indentation-induced pre-crack), even though a mirror is NOT readily visible.

FIG. 4 (A) Schematic of a Flaw in Which a Mirror Has Not Formed and (B) an Optical Micrograph of a Fracture Surface of a Sintered Silicon Nitride Flexure Specimen (σ = 227 MPa)

in Fig. 3B and Fig. 3C. Hackle lines and ridges will be very helpful since they will radiate outward from the fracture origin and mirror. As discussed in 7.1.7 and shown in Fig. 4, low-energy fractures or fractures in porous or coarse-grained ceramics may not lead to fracture mirror formation, but the same principles of using the hackle lines apply. Twist hackle lines are especially helpful and occur when a crack encounters a principal stress field that is not perpendicular to the original plane of fracture. Twist hackle commences as finely spaced parallel lines which usually merge in the direction of crack propagation, giving rise to the well-known river pattern as shown in Fig. 5.

NOTE 5—The merger of twist hackle in the direction of crack propagation is opposite to the tendency of macrocracks to diverge as discussed in 7.1.7.1. These features are usually well defined in glasses and very fine grained, fully dense polycrystalline ceramics. Such twist hackle often occurs on individual grains in coarse-grained polycrystalline ceramics.

7.1.8.4 Examine the external surfaces of the specimen or component if the origin is surface or edge located. A specimen holder (parts C in Fig. X4.4) with a flat or vee groove can be used to hold the entire specimen at a convenient working height to view the external surfaces. This examination can be especially helpful if the origin is not evident on the fracture surface and handling or machining damage is suspected. It is also helpful in ascertaining if any interaction/reaction has occurred between the material and the environment.

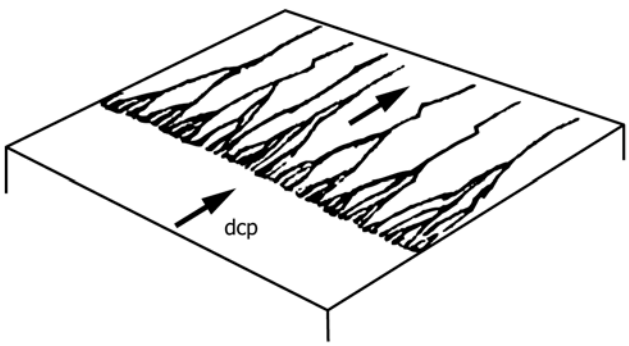

NOTE 1—The direction of crack propagation is shown by the arrow.

FIG. 5 Schematic of Twist Hackle Lines That Form a "River Pattern"

7.1.8.5 Characterize the identity, location, and size of the strength-limiting origin in accordance with 7.2. Record observations pertaining to features specific to the lighting, such as color and reflectivity. These records should include, but not be limited to, notes, sketches, and photographs. Although this extra step may seem time consuming, it often leads to greater efficiency in the long run. These records are extremely useful for publication and minimizing the search time with the SEM. The latter point can not be underestimated. Novices often lose much time searching for the origin or examining the wrong area with the SEM. The SEM images are quite different from optical images, and a reorientation time is sometimes necessary. Appendix X1 and Appendix X9 may be consulted for examples of fracture origins and typical signs of machining damage origins.

7.1.8.6 Reexamine the specimen fracture surfaces if necessary. This will be important if a new material is being examined or if a particular origin type becomes clear only after some or all of the specimens have been examined.

7.1.8.7 Photograph the fracture surface, if appropriate (see 7.1.10). A digital camera directly mounted on the stereo binocular microscope is especially valuable and a great time saver. The camera is usually attached to the body of the stereoptical microscope with a camera port, which diverts the image from one or the other of the two light paths in the microscope. With built-in zoom ranges from 5 to 1 (or greater) and beam splitters, it is possible to frame, focus, and shoot quickly and efficiently.

NOTE 6—Appendix X2 and NIST Special Publication SP 960-16 (**2**) have helpful tips on lighting techniques.

AVA Documents
Document Sharing Hub

Full document details: ASTM C1322-15(2019)

7.1.8.8 For translucent ceramics, it may be useful to illuminate the fracture surface from the side with low incident angle illumination. An opaque card held next to the specimen side can block the light entering the specimen bulk. This will minimize light scattering from inside the specimen. Alternately, it may be useful to coat the fracture surface with evaporated carbon or sputtered gold-palladium prior to optical examination. This will often improve the visibility of some crack propagation patterns, eliminate subsurface reflections, and improve the quality of the photographs taken of the fracture surface. A simple, effective expedient is to stain or "paint" the fracture surface with a green felt-tip pen. The dye will mask internal reflections and run into valleys and depressions, highlighting and bringing out the texture in fracture surface markings. The dye may be easily removed with acetone or alcohol on a cotton-tipped swab. Such dyes may not be advisable if chemical analysis of the origin during subsequent SEM examination is necessary.

NOTE 7—Be careful! Gold or carbon coatings that are too thick can cover or obscure submicron pores and subtle features in very high-strength advanced ceramics. In these instances it is suggested that the SEM examination (7.1.9) be carried out on uncoated specimens at a low voltage prior to this coating. Also, subtle color or contrast variations will be lost or obscured if the specimen is coated.

7.1.8.9 *Replicas*—In some applications, replicas of a fracture surface may be used advantageously, especially with large component fracture analysis or with translucent materials wherein internal reflections obscure the fracture surface. Although extra preparation steps are involved, cellulose acetate, polyvinyl chloride (PVC), or silicon elastomer replicas can record important features, both for optical and SEM examination. Advantages include: (*1*) elimination of obscuring subsurface features which may hinder the optical microscopy of transparent or translucent ceramics; (*2*) provision of an easily stored record of the fracture surface of a critical specimen; (*3*) greater accessibility of curved surfaces to high-magnification optical study; or (*4*) study of unique specimen geometries. Disadvantages include: (*1*) the risk of altering the fracture origin (for example, pull-out of an agglomerate); (*2*) loss of color, contrast, or reflectivity discrimination; (*3*) possible introduction of artifacts (for example, trapped gas bubbles); and (*4*) possible chemical reaction with the text specimen (**3**) and the inability to perform a chemical analysis.

7.1.8.10 *Optional Fracture Mirror and Branching Distances*—It is highly recommended that estimates of the fracture mirror size (mist-hackle boundary) be made for some or all of the specimens in the sample set or in the components. The mirror measurements may either be r_i for the inner mirror (mirror-mist boundary), r_o for the outer mirror (the mist-hackle boundary), or both. In addition, the distance, r_b, to the first major crack branching (where the primary crack splits into two or more cracks) may be measured. See Practice C1678. See Appendix X7 for more information.

7.1.9 *SEM Examination (10 to 2000×)*—Examine both mating halves of the primary fracture surfaces of some or all specimens in the SEM. Optical microscopy is not always adequate to characterize fracture origins. This is especially true for strong materials which have very small mirror regions and smaller origins. Nevertheless, optical microscopy is an essential adjunct to SEM examination since telltale color, contrast, or reflectivity features, as well as subtle features such as mist, and Wallner lines, may be completely lost in electron-microscope viewing. Once optical fractography is complete and the origins are characterized as well as possible, a subset of specimens should be prepared for SEM analysis. Determination of the number of specimens which will comprise the subset will depend on the intent of the analysis (see Table 1).

7.1.9.1 *Preparation:*

7.1.9.2 If necessary, the specimens should be cut to a consistent height that allows for ease of installation and movement in the SEM. Wet cutting should be done so as to flush away the specimen and cutting wheel debris. They should be cut as flat as possible to eliminate problems due to excessive tilt, although a slight tilt backwards can be beneficial on flexure specimens (this allows for the simultaneous viewing of the fracture and tensile surfaces). During the cutting process, every possible measure should be taken to prevent damage to the fracture and external surfaces.

7.1.9.3 Cut specimens should be ultrasonically cleaned in water or an alternate fluid to remove any cutting solutions or other contaminants. Specimens should then be rinsed in a quickly evaporating solvent to remove any final residue. Solvents such as acetone or ethanol are recommended for this step. Once cleaned, each specimen should be properly labeled and placed in a separate glass or plastic container to prevent contamination. All subsequent handling should only be done with tweezers or lint-free gloves, and the fracture surfaces should not be brought into contact with tapes, clays, waxes, or fibrous materials.

7.1.9.4 Coating of a ceramic is widely used to reduce charging of the surface and enhance resolution and contrast. However, some of the new SEM equipment is capable of operating at low accelerating voltages which minimizes charging. If such equipment is available, and time permits, it is recommended that the fracture surfaces first be viewed without a coating. The use of low accelerating voltages can provide a better view of the surface topography. If a coating is needed it should be carefully applied. Coatings that are too thick or multiple coatings may obscure features and lead to misinterpretation of the origins.

7.1.9.5 When necessary, a thin coating, typically 5 to 20 nm, of carbon or gold-palladium should be applied onto the specimens using a vacuum evaporator or sputter coater. The gold-palladium coating is recommended for imaging purposes since it provides better conductivity. Carbon coatings deposited by evaporation are preferred for X-ray emission analysis because carbon is nearly transparent to X-rays. A thermal evaporation method for metal coatings can be used with a specimen tilted relative to the metal source, creating an oblique deposition. This can be used to create shadows that highlight very fine markings on the specimen.

7.1.9.6 Specimens may be mounted for examination either singly or multiply on stubs using conductive paints or conducting tape. Both mating halves of the primary fracture surface of each specimen shall be mounted. Specimens shall be mounted with the cut surface down, and care shall be taken to avoid getting conductive paint on the fracture surfaces or upper

AVA Documents
Document Sharing Hub

Full document details: ASTM C1322-15(2019)

portion of the external surfaces. The specimens shall be mounted in a systematic fashion to permit rapid orientation by the observer. For example, flexure bars should be aligned with their tensile surfaces the same way. If a pencil is used to mark the specimen orientation or the approximate location of the origin, exercise care that no traces of the pencil material get on or near the fracture surface. Once mounted, specimens may be sprayed with compressed air to remove any lint or lightly clinging debris.

7.1.9.7 *Examination*—Begin the examination by orienting the specimen in the monitor while viewing the specimen at the lowest magnification. Locate the fracture mirror at the lowest magnification. It is often useful to use an optical photograph as a guide when trying to locate the fracture mirror. Adjust the contrast and brightness to provide the maximum amount of information. The entire surface should be photographed at a low magnification to provide a frame of reference for later work. Conventional practice is to orient the specimen image in a consistent manner, that is, place the tensile surface of a flexure specimen at the bottom of the photograph.

7.1.9.8 The SEM may be used either in the secondary electron or backscattered electron modes. The former gives a fully illuminated image of the surface topography with better spatial resolution, while the latter provides greater height contrast due to its sensitivity to the detector orientation. Features not in direct line with the detector are darker or even in shadow. Backscattered electrons carry both topographic and compositional data. This is valuable for detecting inhomogeneities and inclusions. The topographic and compositional signals can be separated for further analytical flexibility. If the analyst is unsuccessful in characterizing the origin using the secondary electron mode, then the backscattered electron mode should be tried, or vice versa.

7.1.9.9 Locate, characterize, and photograph the fracture origin. It should be approximately in the middle of the fracture mirror, if a mirror exists. Hackle lines which typically radiate from the fracture origin can also be used to find the origin.

7.1.9.10 Characterize the identity, location, and size of the origin in accordance with 7.2. It may be necessary to acquire an energy- or wavelength-dispersive X-ray analysis of both the origin and the background to determine whether there are any chemical differences.

7.1.9.11 Examine the external surfaces of the specimen or component if the origin is surface located. In some cases, such as when handling or machining damage is suspected, it may be necessary to tilt the specimen slightly in order to view a portion of the external surfaces. Sometimes a 180° rotation can help discern subsurface machining-related cracks.

7.1.9.12 Photograph the fracture origin. This will typically be in the 200 to 1000× range. Use a magnification in which the origin accounts for approximately one third of the frame area. A photograph showing the fracture mirror and some hackle is also very helpful for later reassessment of an origin. In many cases, photographs at varying magnifications are necessary to furnish all the required information regarding the failure of the specimen. It is recommended that, whenever possible, a consistent set of magnifications and orientations be used to permit comparative assessments between specimens. Stereo photographic pairs sometimes can reveal topographical details that are important to origin characterization.

7.1.9.13 Maintain notes and records of the fractographic findings. These may include sketches of the fracture surface, notes on the origin type and appearance, location of photographs taken, magnification and reference numbers of photographs, whether or not X-ray spectra were acquired, and the location used to acquire the spectra. When maintaining notes of acquired X-ray spectra, always include the accelerating voltage, probe current, magnification, dead time, counts and scan time, working distance, and whether the spectra was taken in scan or spot mode.

7.1.9.14 Repeat the steps in the SEM examination (7.1.9.7) for the mating half of the primary fracture surface.

7.1.9.15 Examine the region in the vicinity of the fracture origin to detect any evidence of stable crack extension or slow crack growth (SCG). If an origin is surface located, it may be susceptible to environmentally assisted SCG. If fracture is at elevated temperatures, SCG can occur from surface- or volume-located origins. Intergranular crack features near the origin surrounded by transgranular or mixed transgranular plus intergranular fracture often are suggestive of SCG. However, intergranular markings may be difficult to distinguish from microporosity in some materials.

7.1.9.16 *Optional*—In polycrystalline ceramics, observe and record the mode of crack propagation (transgranular or intergranular) in the vicinity of the origin and also in the region outside the mirror.

7.1.9.17 *Optional*—If the fracture mirrors are too small to measure with the optical microscope, then fracture mirror sizes may be measured from SEM images. See Practice C1678.

7.1.10 *Recording Fractographic Observations*—It is recommended that, whenever possible, three photographs be taken of each fracture surface (one set per pair of fracture halves is adequate). A mix of optical and SEM images is satisfactory. As seen in Fig. 6, these should include, but not be limited to:

(1) A photograph (optical or SEM) of all or most of the entire fracture surface;

(2) A photograph of the fracture mirror and some surrounding detail; and

(3) A photograph of the origin.

NOTE 8—This idealized procedure of three photographs per fracture surface is the most comprehensive record keeping practice. It may be impractical or too time consuming to perform this on every specimen in a sample set. At a minimum, it should be done for several representative specimens. In many instances, a reexamination or reappraisal of an origin is needed, and a single close-up photograph of an apparent origin is inadequate since the photograph may be incomplete or of the wrong feature. In such instances, photographs of the whole fracture surface and mirror region are invaluable.

7.1.11 It is highly recommended that a representative polished section be made and photographed to reveal the normal microstructure of the ceramic and allow an assessment of whether the origins are abnormal or normal microstructural features. The polished section should be thermally or chemically etched if necessary.

7.2 *Origin Characterization:*

7.2.1 *General*—The fracture origin in each specimen/component shall be characterized by the following three

AVA Documents
Document Sharing Hub

Full document details: ASTM C1322-15(2019)

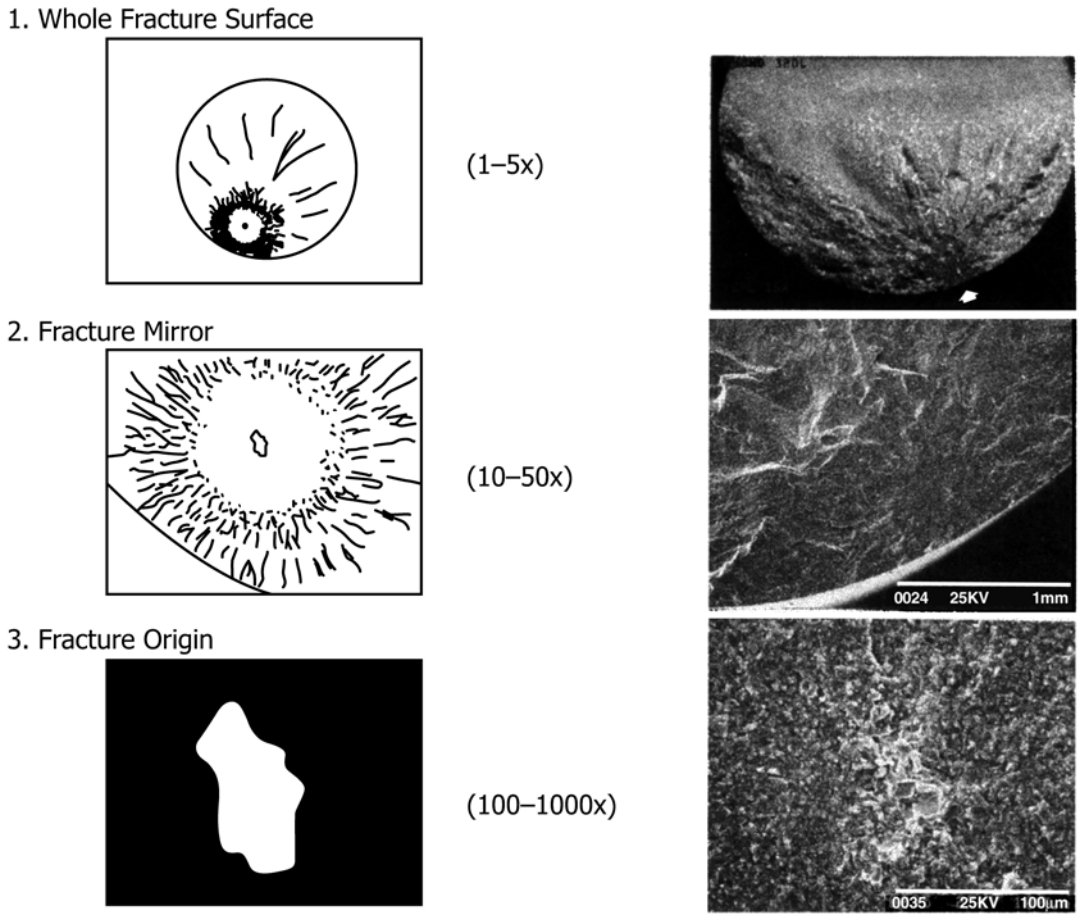

NOTE 1—(b) shows a sintered reaction bonded silicon nitride rod flexural strength specimen that had an inclusion origin σ = 751 MPa maximum, 684 MPa at the origin center.

FIG. 6 Schematic (a) and Example (b) of the Three Photographs Suggested for Recording Fractographic Observations

attributes: identity, location, and size, as summarized in Table 2. See Figs. 7-10. For example, pore; volume-distributed; in the volume 40 µm as shown in the first row of Fig. 7. Origins are either inherently volume distributed throughout the bulk of the material (for example, agglomerates, large grains, or pores) or inherently surface distributed on the material (for example, handling damage, oxidation pits, or corrosion). An inherently volume-distributed origin in a ceramic material can, in any single specimen or component, be volume located, surface located, near-surface located, or edge located, as seen in Fig. 9. In other words, even if a flaw in a test piece is located at the surface, it does not necessarily mean that it is inherently surface distributed. Subsection 7.2.3 provides guidance on interpretation. The variety of locations for a volume-distributed origin is a consequence of the random sampling procedure incurred in preparing specimens or components (for example, machining pieces out of a larger component or plate).

TABLE 2 Origin Characterization Scheme

Identity	Location	Size
Nomenclature and inherent spatial distribution:	Spatial location of an individual origin in a specific specimen:	Estimate of the diameter for equiaxed origins, or
Volume distributed, or surface distributed	Volume located, or surface located, or near-surface located, or edge located	Minor and major axes of volume-distributed origins, or depth and width of surface-distributed origins See Figs. 8 and 10

7.2.2 *Origin Characterization—Identity:*

7.2.2.1 Characterize the origin by a phenomenological approach which identifies what the origin is and not how it appears under a particular mode of viewing. Descriptions of the mode of viewing may be used as qualifiers, for example, pores that appear white when viewed optically, but use of only the appearance, white spots, should be avoided. (This approach is chosen since origins appear drastically different in optical versus electron microscopy.)

7.2.2.2 Use the nomenclature system of Section 3 if possible. The nomenclature is designed to identify the origin by name (for example, pore, inclusion) and is classified based on the inherent spatial distribution as discussed in 5.9 and 7.2.1. It should be recognized that not all origins can be so characterized and that some origins may be specific to a material and its process history (see 3.4). Optionally, a superscript may be used to designate the spatial distribution of a particular origin type.

Full document details: ASTM C1322-15(2019)

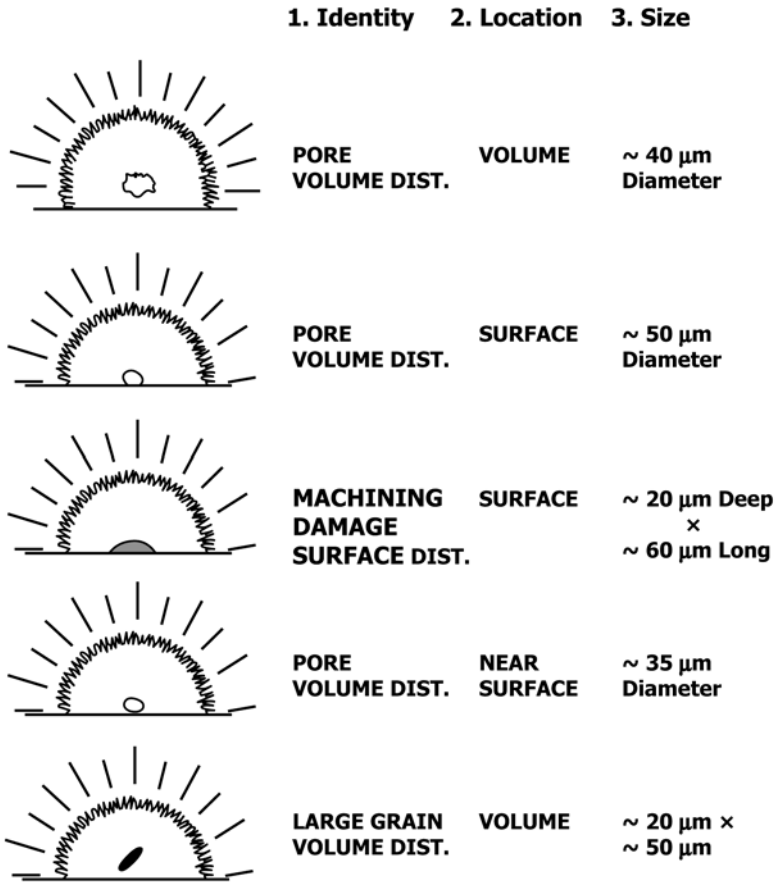

FIG. 7 Illustration of the Flaw Characterization Scheme for Five Different Fracture Origins

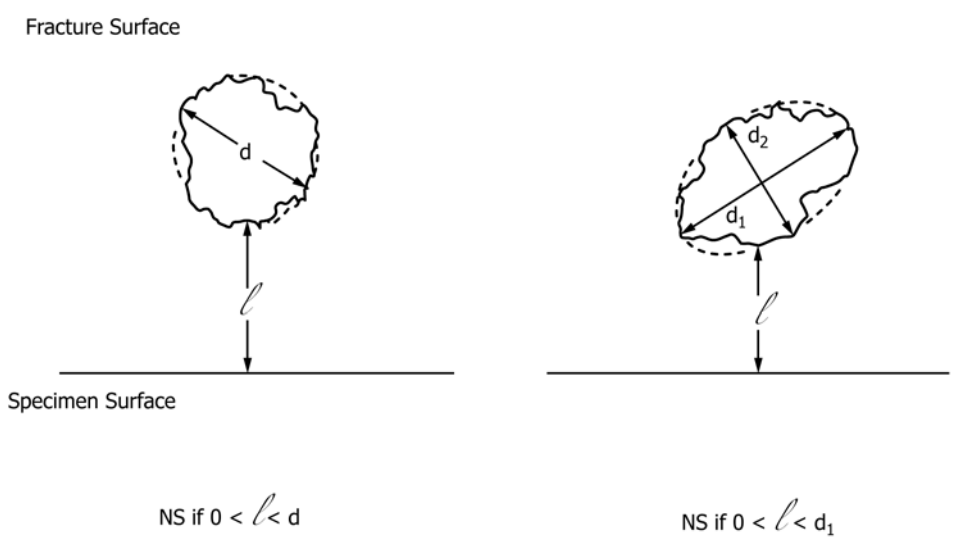

NOTE 1—Origins can be characterized as near-surface (NS) depending upon whether they are within the distances illustrated. The origin size is the diameter for equiaxed origins, and is the length of the minor and major axes of an elongated origin. All measurements dimensions are approximate only.

FIG. 8 Schematic Showing Origins and Their Dimensions Relative to the Specimen Surface

For example, P^V designates a pore that is inherently volume distributed or PT^S is a pit that is inherently surface distributed.

7.2.2.3 There may be multiple origin types coincident at a fracture origin. When such mixed attribute cases arise, some

AVA Documents
Document Sharing Hub

Full document details: ASTM C1322-15(2019)

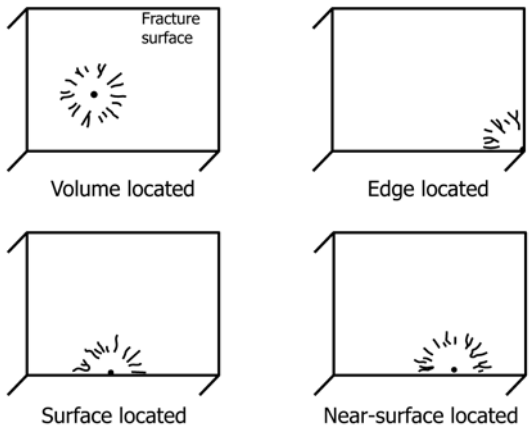

FIG. 9 Schematic Which Shows the Four Possible Locations of a Volume-Distributed Fracture Origin

judgment is required as to which origin is primary or intrinsic. The fractographer shall determine which origin type is primary and use an ampersand (&) between the primary and secondary origin codes for reporting and graphical representation purposes. (For example, P^V&LG^V denotes the origin is primarily a volume-distributed pore but with some associated large grains.)

NOTE 9—Origins can sometimes be difficult to characterize if they have mixed attributes. For example, porous regions often have pores associated with them. It is very common for machining damage surface cracks to link up with porosity, or other flaw types, at or just below the surface. If there is any doubt about the origin characterization, a more complete description of the origin type should be contained in the report.

7.2.2.4 In some mixed attribute cases it is impossible to determine which origin type is primary. The fractographer shall then use a back slash (/) between the identity codes in the report and graphical representation, (agglomerate or pore, A^V/P^V) to indicate the identity of the origin could be one or the other.

7.2.2.5 Some high-strength ceramics ($\sigma \geq 1000$ MPa) may fracture due to the combined effects of multiple origin types which are centrally located in the fracture mirror. From a fracture mechanics analysis neither origin type is large enough to initiate fracture, but together they are large enough to cause fracture. A plus sign (+) shall be used in the report and graph representation to indicate that these origin types linked together to limit the strength of the ceramic. (For example, $P^V + MD^S$ indicates volume-distributed pore combined with machining damage to become the fracture origin.)

7.2.2.6 In some ceramic materials there may be multiple origin populations within the same origin type (large alumina grains or large zirconia grains in a zirconia-toughened alumina), which limit the strength of the material. In such instances a subscript shall be used to differentiate each population (LG^V_a indicates large alumina grains and LG^V_z indicates large zirconia grains).

7.2.2.7 In instances where the specimen is examined but the origin identity cannot be determined, the origin shall be designated as an unidentifiable origin, as listed in 3.3.1 and a question mark (?) will be used in the report or graphical representation such as shown in five instances in Fig. 11.

7.2.2.8 In cases where the identity of the origin can be estimated, but is not certain, a question mark may be appended to the identity code, for example, Pore(?) or P^V?.

7.2.2.9 When a specimen has not been examined, it shall be recorded as not examined and a hyphen (-) will be used in the report and graphical representation to denote this.

7.2.3 *Origin Characterization—Location:*

7.2.3.1 Characterize the location of a specific origin qualitatively in a given specimen/component. The origin shall be characterized as being located in the volume (in the bulk), or located at the surface, near the surface, or at an edge (if an edge exists). For example, the origin in specimen #12 was a pore, located in the bulk; or the origin in specimen #13 was a pore, located at the surface. The origin location, which specifies only the location of the strength-limiting flaw in a given specimen, shall not be used to statistically differentiate origin populations.

7.2.3.2 Origins shall be considered surface located in a specimen or component if the origin is in direct contact with an external surface. If there are two or more types of external surfaces (for example, a rectangular flexure specimen that has side and tensile surfaces, or a biaxially loaded disk with a polished tensile and outer rim surfaces), the surfaces shall be differentiates. Origins which are located at the juncture of two external surfaces (the chamfer or corner of a flexure or tensile specimen) shall be considered edge located.

7.2.3.3 In some instances, it is useful to specify the origin location if it is near, but not in direct contact with the external tensile surface. This location category shall be termed near-surface (NS) located (see Figs. 8 and 9). This additional specification of location is important for fracture mechanics evaluation of origins and service performance issues. For example, some near-surface-located origins may be more susceptible to time-dependent crack growth than equivalent volume-located origins. Near-surface-located origins may also be likely to link up with surface machining or impact damage or to extend subcritically to the surface prior to catastrophic fracture. In order to be considered near-surface located rather than volume located, the origin shall be no more than one times the size of the origin diameter or major axis below the tensile surface ($0 < \ell < d$ as shown in Fig. 8). The proximity to the tensile surface shall be noted by estimating the perpendicular distance from this surface to the closest point of the origin, see Fig. 8. If the results of the fractographic analysis are to be used for design purposes (Table 1, Level 3) then the fractographer may wish to consult further with the design engineer regarding the near-surface classification. Alternative criteria for the NS classification may apply in some instances. This criteria, with supporting reasoning, shall be included in the report section.

7.2.4 *Origin Characterization—Size:*

7.2.4.1 Characterize the origin size. The size need not be measured precisely, as this characterization is intended to describe the general nature of the origins (the 20-µm pore versus the 1-µm porosity). A fully quantitative size characterization is permitted (but not required) by this practice.

NOTE 10—Precise origin measurements are usually not helpful since the origins' true size may not be revealed on the fracture surface, and exact fracture mechanics analyses of most origins are not possible due to their complex shape. An important exception to this is machining damage

AVA Documents
Document Sharing Hub

Full document details: ASTM C1322-15(2019)

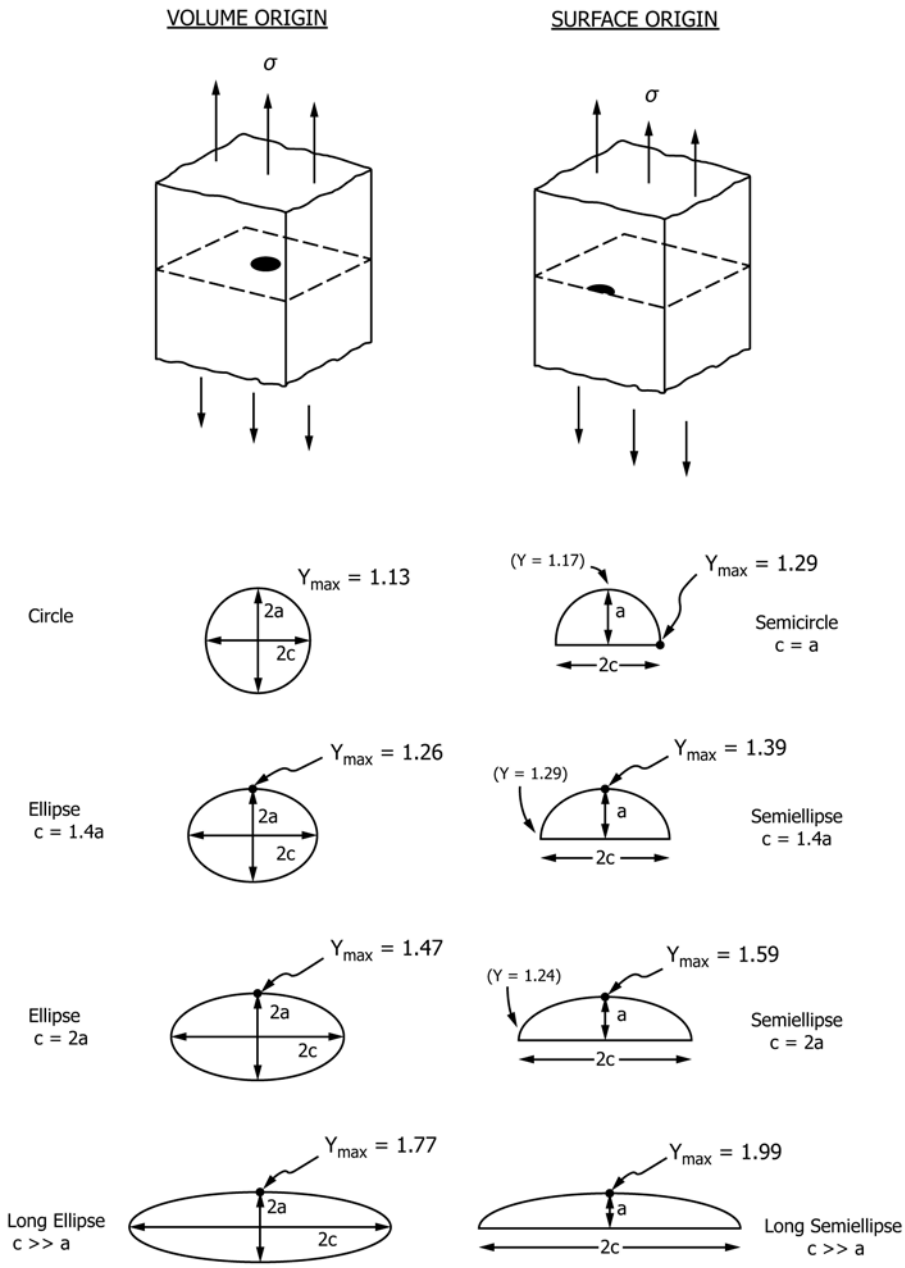

NOTE 1—Y_{max} is shown for each example. The Y at the other points of the crack periphery is shown (in parentheses) for comparison in a few examples.
NOTE 2—See Note 14 for the applicability of these factors to flexural loadings.

FIG. 10 Stress Intensity Factors (Y) for Penny-Shaped (Circular) and Elliptical Cracks or Semicircular and Semielliptical Surface Cracks in Tension Stress Fields; The factors are also valid for flexurally loaded pieces, but only if the flaw size is small relative to the specimen thickness

wherein the origin size measurement may be very useful for the estimation of fracture toughness.

7.2.4.2 Measure and record the origin depth (a) and, if possible, the width ($2c$) in cases when the origins are inherently surface distributed, such as machining damage or pits. See Fig. 10. Use the depth (a) in Eq 1 and Eq 2.

NOTE 11—Full characterization to determine the appropriate shape factor (Y) for K_{Ic} calculations requires the width of the origin ($2c$) to be measured in addition to the crack depth (a). See Fig. 10 and the paper by Raju and Newman listed in X2.1.2 for semicircular or semielliptical surface-crack stress intensity factors.

7.2.4.3 Measure and record the origin diameter ($2a$) if the origin is inherently volume distributed and is approximately equiaxed, as illustrated in Fig. 8 and Fig. 10. However, use the origin radius in Eq 1 and Eq 2. If a volume-distributed origin is oblong or asymmetrical, report the approximate minor and major axis lengths ($2a$ and $2c$) (for example, a 25 by 60-µm

Documents
Document Sharing Hub

Full document details: ASTM C1322-15(2019)