This international standard was developed in accordance with internationally recognized principles on standardization established in the Decision on Principles for the Development of International Standards, Guides and Recommendations issued by the World Trade Organization Technical Barriers to Trade (TBT) Committee.

Designation: C1366 – 19

Standard Test Method for Tensile Strength of Monolithic Advanced Ceramics at Elevated Temperatures[1]

This standard is issued under the fixed designation C1366; the number immediately following the designation indicates the year of original adoption or, in the case of revision, the year of last revision. A number in parentheses indicates the year of last reapproval. A superscript epsilon (ε) indicates an editorial change since the last revision or reapproval.

1. Scope

1.1 This test method covers the determination of tensile strength under uniaxial loading of monolithic advanced ceramics at elevated temperatures. This test method addresses, but is not restricted to, various suggested test specimen geometries as listed in the appendix. In addition, test specimen fabrication methods, testing modes (force, displacement, or strain control), testing rates (force rate, stress rate, displacement rate, or strain rate), allowable bending, and data collection and reporting procedures are addressed. Tensile strength as used in this test method refers to the tensile strength obtained under uniaxial loading.

1.2 This test method applies primarily to advanced ceramics which macroscopically exhibit isotropic, homogeneous, continuous behavior. While this test method applies primarily to monolithic advanced ceramics, certain whisker- or particle-reinforced composite ceramics as well as certain discontinuous fiber-reinforced composite ceramics may also meet these macroscopic behavior assumptions. Generally, continuous fiber ceramic composites (CFCCs) do not macroscopically exhibit isotropic, homogeneous, continuous behavior and application of this test method to these materials is not recommended.

1.3 The values stated in SI units are to be regarded as the standard and are in accordance with IEEE/ASTM SI 10.

1.4 *This standard does not purport to address all of the safety concerns, if any, associated with its use. It is the responsibility of the user of this standard to establish appropriate safety, health, and environmental practices and determine the applicability of regulatory limitations prior to use.* Refer to Section 7 for specific precautions.

1.5 *This international standard was developed in accordance with internationally recognized principles on standardization established in the Decision on Principles for the Development of International Standards, Guides and Recommendations issued by the World Trade Organization Technical Barriers to Trade (TBT) Committee.*

2. Referenced Documents

2.1 *ASTM Standards:*[2]

C1145 Terminology of Advanced Ceramics
C1161 Test Method for Flexural Strength of Advanced Ceramics at Ambient Temperature
C1239 Practice for Reporting Uniaxial Strength Data and Estimating Weibull Distribution Parameters for Advanced Ceramics
C1322 Practice for Fractography and Characterization of Fracture Origins in Advanced Ceramics
D3379 Test Method for Tensile Strength and Young's Modulus for High-Modulus Single-Filament Materials
E4 Practices for Force Verification of Testing Machines
E6 Terminology Relating to Methods of Mechanical Testing
E21 Test Methods for Elevated Temperature Tension Tests of Metallic Materials
E83 Practice for Verification and Classification of Extensometer Systems
E220 Test Method for Calibration of Thermocouples By Comparison Techniques
E337 Test Method for Measuring Humidity with a Psychrometer (the Measurement of Wet- and Dry-Bulb Temperatures)
E1012 Practice for Verification of Testing Frame and Specimen Alignment Under Tensile and Compressive Axial Force Application
IEEE/ASTM SI 10 American National Standard for Metric Practice

3. Terminology

3.1 *Definitions:*

3.1.1 Definitions of terms relating to tensile testing and advanced ceramics as they appear in Terminology E6 and Terminology C1145, respectively, apply to the terms used in

[1] This test method is under the jurisdiction of ASTM Committee C28 on Advanced Ceramics and is the direct responsibility of Subcommittee C28.01 on Mechanical Properties and Performance.

Current edition approved Aug. 1, 2019. Published September 2019. Originally approved in 1997. Last previous edition approved in 2013 as C1366 – 04 (2013). DOI: 10.1520/C1366-19.

[2] For referenced ASTM standards, visit the ASTM website, www.astm.org, or contact ASTM Customer Service at service@astm.org. For *Annual Book of ASTM Standards* volume information, refer to the standard's Document Summary page on the ASTM website.

Copyright © ASTM International, 100 Barr Harbor Drive, PO Box C700, West Conshohocken, PA 19428-2959. United States

Documents
Document Sharing Hub
Full document details: ASTM C1366-19

this test method. Pertinent definitions are shown in the following with the appropriate source given in parentheses. Additional terms used in conjunction with this test method are defined in the following.

3.1.2 *advanced ceramic, n*—a highly engineered, high-performance, predominately non-metallic, inorganic, ceramic material having specific functional attributes. (See Terminology C1145.)

3.1.3 *axial strain [LL^{-1}], n*—the average longitudinal strains measured at the surface on opposite sides of the longitudinal axis of symmetry of the specimen by two strain-sensing devices located at the mid length of the reduced section. (See Practice E1012.)

3.1.4 *bending strain [LL^{-1}], n*—the difference between the strain at the surface and the axial strain. In general, the bending strain varies from point to point around and along the reduced section of the specimen. (See Practice E1012.)

3.1.5 *breaking load [F], n*—the load at which fracture occurs. (See Terminology E6.)

3.1.6 *fractography, n*—the means and methods for characterizing a fractured specimen or component. (See Terminology C1145.)

3.1.7 *fracture origin, n*—the source from which brittle fracture commences. (See Terminology C1145).

3.1.8 *percent bending, n*—the bending strain times 100 divided by the axial strain. (See Practice E1012.)

3.1.9 *slow crack growth, n*—sub-critical crack growth (extension) that may result from, but is not restricted to, such mechanisms as environmentally assisted stress corrosion or diffusive crack growth.

3.1.10 *tensile strength, S_u [FL^2], n*—the maximum tensile stress which a material is capable of sustaining. Tensile strength is calculated from the maximum load during a tension test carried to rupture and the original cross-sectional area of the specimen. (See Terminology E6.)

4. Significance and Use

4.1 This test method may be used for material development, material comparison, quality assurance, characterization, reliability assessment, and design data generation.

4.2 High-strength, monolithic advanced ceramic materials are generally characterized by small grain sizes (<50 µm) and bulk densities near the theoretical density. These materials are candidates for load-bearing structural applications requiring high degrees of wear and corrosion resistance and elevated-temperature strength. Although flexural test methods are commonly used to evaluate strength of advanced ceramics, the nonuniform stress distribution of the flexure specimen limits the volume of material subjected to the maximum applied stress at fracture. Uniaxially loaded tensile strength tests provide information on strength-limiting flaws from a greater volume of uniformly stressed material.

4.3 Because of the probabilistic strength distributions of brittle materials such as advanced ceramics, a sufficient number of test specimens at each testing condition is required for statistical analysis and eventual design with guidelines for sufficient numbers provided in this test method. Size-scaling effects as discussed in Practice C1239 will affect the strength values. Therefore, strengths obtained using different recommended tensile test specimen geometries with different volumes or surface areas of material in the gage sections will be different due to these size differences. Resulting strength values can, in principle, be scaled to an effective volume or effective surface area of unity as discussed in Practice C1239.

4.4 Tensile tests provide information on the strength and deformation of materials under uniaxial stresses. Uniform stress states are required to effectively evaluate any nonlinear stress-strain behavior which may develop as the result of testing mode, testing rate, processing or alloying effects, environmental influences, or elevated temperatures. These effects may be consequences of stress corrosion or sub-critical (slow) crack growth which can be minimized by testing at appropriately rapid rates as outlined in this test method.

4.5 The results of tensile tests of specimens fabricated to standardized dimensions from a particular material or selected portions of a part, or both, may not totally represent the strength and deformation properties of the entire full-size end product or its in-service behavior in different environments.

4.6 For quality control purposes, results derived from standardized tensile test specimens can be considered to be indicative of the response of the material from which they were taken for particular primary processing conditions and post-processing heat treatments.

4.7 The tensile strength of a ceramic material is dependent on both its inherent resistance to fracture and the presence of flaws. Analysis of fracture surfaces and fractography as described in Practice C1322 and MIL-HDBK-790, though beyond the scope of this test method, are recommended for all purposes, especially for design data.

5. Interferences

5.1 Test environment (vacuum, inert gas, ambient air, etc.), including moisture content (for example relative humidity), may have an influence on the measured tensile strength. In particular, the behavior of materials susceptible to slow crack growth fracture will be strongly influenced by test environment, testing rate, and elevated temperatures. Testing to evaluate the maximum strength potential of a material should be conducted in inert environments or at sufficiently rapid testing rates, or both, to minimize slow crack growth effects. Conversely, testing can be conducted in environments and testing modes and rates representative of service conditions to evaluate material performance under use conditions. When testing is conducted in uncontrolled ambient air with the intent of evaluating maximum strength potential, monitor and report relative humidity and ambient temperature. Testing at humidity levels >65 % relative humidity (RH) is not recommended.

5.2 Surface preparation of test specimens can introduce fabrication flaws that may have pronounced effects on tensile strength. Machining damage introduced during test specimen preparation can be either a random interfering factor in the determination of ultimate strength of pristine material (that is, increased frequency of surface-initiated fractures compared to

AVA Documents
Document Sharing Hub

Full document details: ASTM C1366-19

volume-initiated fractures), or an inherent part of the strength characteristics. Surface preparation can also lead to the introduction of residual stresses. Universal or standardized test methods of surface preparation do not exist. Final machining steps may or may not negate machining damage introduced during the early coarse or intermediate machining. Thus, report test specimen fabrication history since it may play an important role in the measured strength distributions.

5.3 Bending in uniaxial tensile tests can cause or promote nonuniform stress distributions with maximum stresses occurring at the test specimen surface, leading to nonrepresentative fractures originating at surfaces or near geometrical transitions. Bending may be introduced from several sources including misaligned load trains, eccentric or misshaped test specimens, and nonuniformly heated test specimens or grips. In addition, if strains or deformations are measured at surfaces where maximum or minimum stresses occur, bending may introduce over or under measurement of strains. Similarly, fracture from surface flaws may be accentuated or muted by the presence of the nonuniform stresses caused by bending.

6. Apparatus

6.1 *Testing Machines*—Machines used for tensile testing shall conform to the requirements of Practices E4. The forces used in determining tensile strength shall be accurate within ±1 % at any force within the selected force range of the testing machine as defined in Practices E4. A schematic showing pertinent features of a possible tensile testing apparatus is shown in Fig. 1.

6.2 *Gripping Devices:*

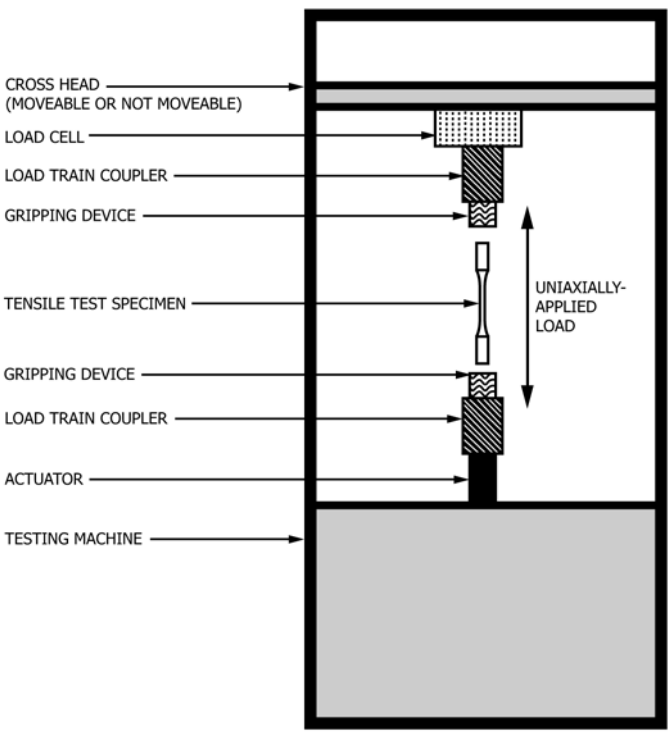

FIG. 1 Schematic Diagram of One Possible Apparatus for Conducting a Uniaxially Loaded Tensile Test

6.2.1 *General*—Various types of gripping devices may be used to transmit the measured load applied by the testing machine to the test specimen. The brittle nature of advanced ceramics requires a uniform interface between the grip components and the gripped section of the test specimen. Line or point contacts and nonuniform pressure can produce Hertzian-type stress leading to crack initiation and fracture of the test specimen in the gripped section. Gripping devices can be classed generally as those employing active and those employing passive grip interfaces as discussed in the following sections. Uncooled grips located inside the heated zone are termed "hot grips" and generally produce almost no thermal gradient in the test specimen but at the relative expense of grip materials of at least the same temperature capability as the test material and increased degradation of the grips due to exposure to the elevated-temperature oxidizing environment. Grips located outside the heated zone surrounding the test specimen may or may not employ cooling. Uncooled grips located outside the heated zone are termed "warm grips" and generally induce a mild thermal gradient in the test specimen but at the relative expense of elevated-temperature alloys in the grips and increased degradation of the grips due to exposure to the elevated-temperature oxidizing environment. Cooled grips located outside the heated zone are termed "cold grips" and generally induce a steep thermal gradient in the test specimen at a greater relative expense because of grip cooling equipment and allowances, although with the advantage of consistent alignment and little degradation from exposure to elevated temperatures.

NOTE 1—The expense of the cooling system for cold grips is balanced against maintaining alignment which remains consistent from test to test (stable grip temperature) and decreased degradation of the grips due to exposure to the elevated-temperature oxidizing environment. When grip cooling is employed, means should be provided to control the cooling medium to maximum fluctuations of 5 K (less than 1 K preferred) about a set point temperature (**1**)[3] over the course of the test to minimize thermally induced strain changes in the test specimen. In addition, opposing grip temperatures should be maintained at uniform and consistent temperatures within ±5 K (less than ±1 K preferred) (**1**) so as to avoid introducing unequal thermal gradients and subsequent nonuniaxial stresses in the test specimen. Generally, the need for control of grip temperature fluctuations or differences may be indicated if test specimen gage section temperatures cannot be maintained within the limits required in 9.3.2.

6.2.1.1 *Active Grip Interfaces*—Active grip interfaces require a continuous application of a mechanical, hydraulic, or pneumatic force to transmit the load applied by the test machine to the test specimen. Generally, these types of grip interfaces cause a force to be applied normal to the surface of the gripped section of the test specimen. Transmission of the uniaxial force applied by the test machine is then accomplished by friction between the test specimen and the grip faces. Thus, important aspects of active grip interfaces are uniform contact between the gripped section of the test specimen and the grip faces and constant coefficient of friction over the grip/test specimen interface.

(*a*) For cylindrical test specimens, a one-piece split-collet arrangement acts as the grip interface (**2, 3**) as illustrated by

[3] The boldface numbers in parentheses refer to a list of references at the end of this standard.

AVA Documents
Document Sharing Hub

Full document details: ASTM C1366-19

Fig. 2. Close tolerances are required for concentricity of both the grip and test specimen diameters. In addition, the diameter of the gripped section of the test specimen and the unclamped, open diameter of the grip faces must be within similarly close tolerances to promote uniform contact at the test specimen/grip interface. Tolerances will vary depending on the exact configuration as shown in the appropriate specimen drawings.

(*b*) For flat test specimens, flat-face, wedge-grip faces act as the grip interface as illustrated in Fig. 3. Close tolerances are required for the flatness and parallelism as well as wedge angle of the grip faces. In addition, the thickness, flatness, and parallelism of the gripped section of the test specimen must be within similarly close tolerances to promote uniform contact at the test specimen/grip interface. Tolerances will vary depending on the exact configuration as shown in the appropriate test specimen drawings.

6.2.1.2 *Passive Grip Interfaces*—Passive grip interfaces transmit the force applied by the test machine to the test specimen through a direct mechanical link. Generally, these mechanical links transmit the test forces to the test specimen via geometrical features of the test specimens such as button-head fillets, shank shoulders, or holes in the gripped head. Thus, the important aspect of passive grip interfaces in uniform contact between the gripped section of the test specimen and the grip faces.

(*a*) For cylindrical test specimens, a multi-piece split-collet arrangement acts as the grip interface at button-head fillets of the test specimen (**4**) as illustrated in Fig. 4. Because of the limited contact area at the test specimen/grip interface, soft, deformable collet materials may be used to conform to the exact geometry of the test specimen. In some cases, tapered collets may be used to transfer the axial force into the shank of the test specimen rather than into the button-head radius (**4**). Moderately close tolerances are required for concentricity of both the grip and test specimen diameters. In addition, tolerances on the collet height must be maintained to promote uniform axial loading at the test specimen/grip interface. Tolerances will vary depending on the exact configuration as shown in the appropriate test specimen drawings.

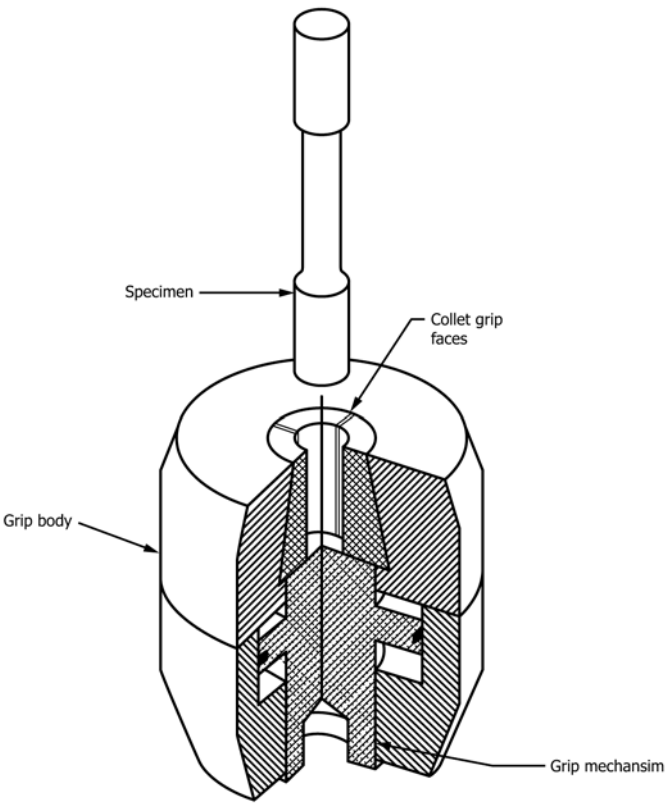

FIG. 2 Example of a Smooth, Split-Collet Active Gripping System for Cylindrical Test Specimens

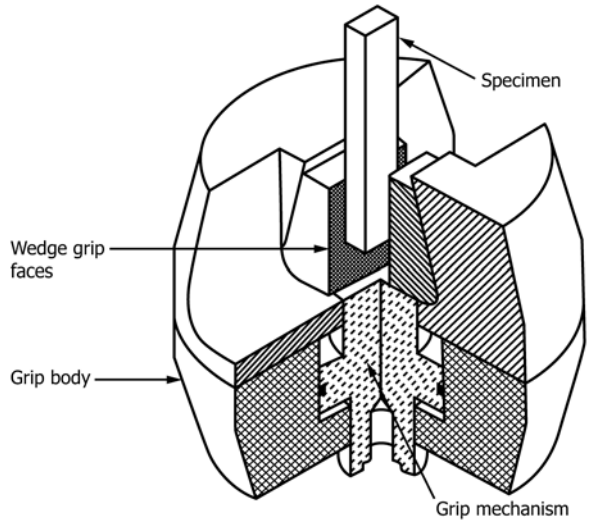

FIG. 3 Example of a Smooth, Wedge Active Gripping System for Flat Test Specimens

(*b*) For flat test specimens, pins or pivots act as grip interfaces at either the shoulders of the test specimen shank or at holes in the gripped test specimen head (**5-7**). Close tolerances are required of shoulder radii and grip interfaces to promote uniform contact along the entire test specimen/grip interface as well as to provide for non-eccentric loading as shown in Fig. 5. Moderately close tolerances are required for longitudinal coincidence of the pin and hole centerlines as illustrated in Fig. 6.

6.3 *Load Train Couplers:*

6.3.1 *General*—Various types of devices (load train couplers) may be used to attach the active or passive grip interface assemblies to the testing machine (for example, Fig. 7). The load train couplers, in conjunction with the type of gripping device, play major roles in the alignment of the load train and thus subsequent bending imposed in the test specimen. Load train couplers can be classified as fixed and non-fixed as discussed in the following sections. The use of well-aligned fixed or self-aligning non-fixed couplers does not automatically guarantee low bending in the gage section of the tensile test specimen. Well-aligned fixed or self-aligning non-fixed couplers provide for well-aligned load trains, but the type and operation of grip interfaces, as well as the as-fabricated dimensions of the tensile test specimen, can add significantly to the final bending imposed in the test specimen gage section.

6.3.1.1 Regardless of which type of coupler is used, verify alignment of the testing system at a minimum at the beginning and end of a test series unless the conditions for verifying

AVA Documents
Document Sharing Hub

Full document details: ASTM C1366-19

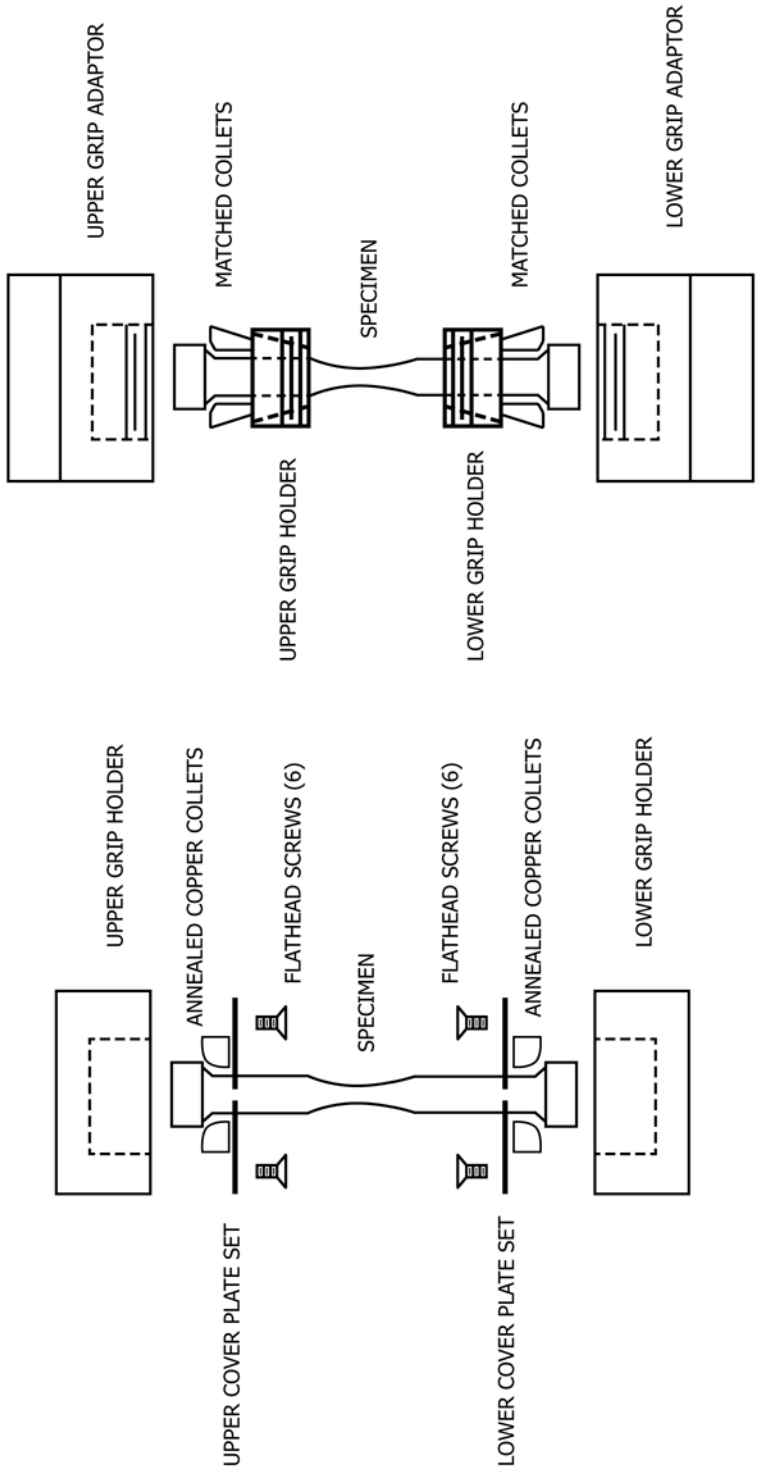

FIG. 4 Examples of Straight- and Tapered-Collet Passive Gripping Systems for Cylindrical Test Specimens (4)

Documents
Document Sharing Hub
Full document details: ASTM C1366-19

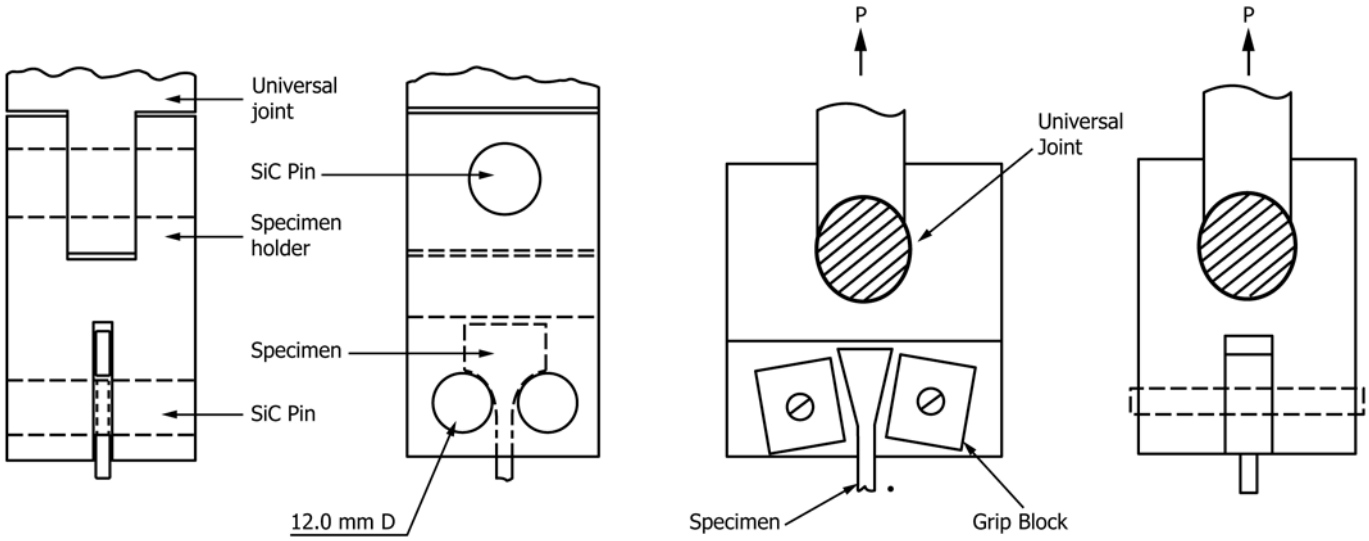

FIG. 5 Examples of Shoulder-Loaded, Passive Gripping Systems for Flat Test Specimens (5, 6)

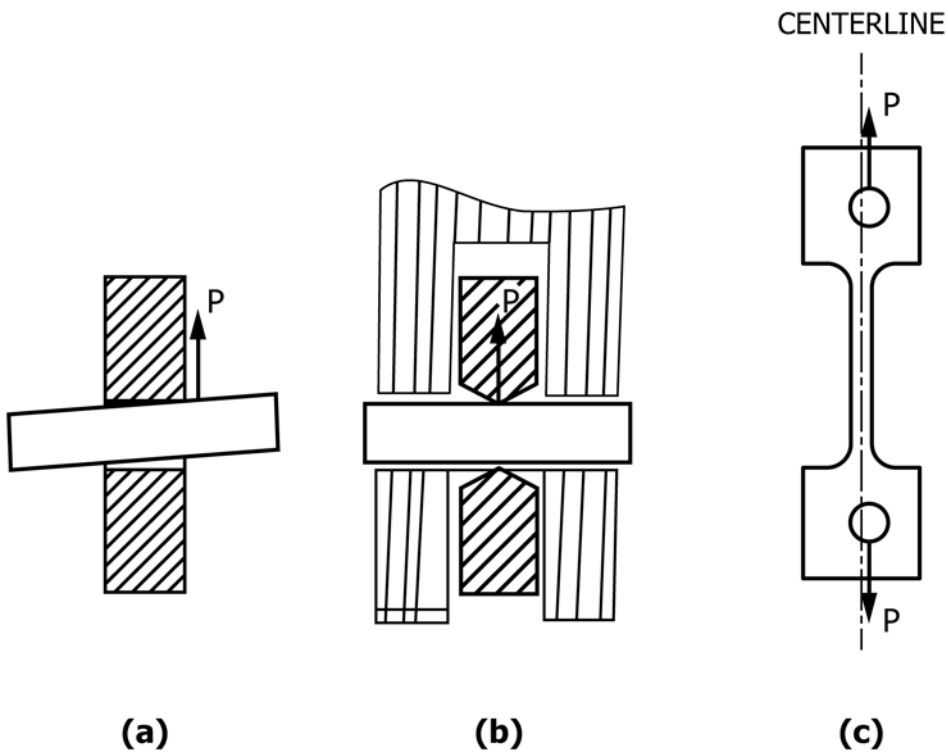

FIG. 6 Example of a Pin-Loaded, Passive Gripping System for Flat Test Specimens (6)

alignment are otherwise met. An additional verification of alignment is recommended, although not required, at the middle of the test series. Use either a dummy or actual test specimen. Allowable bending requirements are discussed in 6.5. See Practice E1012 for discussions of alignment and Appendix X1 for suggested procedures specific to this test method. A test series is interpreted to mean a discrete group of tests on individual test specimens conducted within a discrete period of time on a particular material configuration, test specimen geometry, test condition, or other uniquely definable qualifier (for example, a test series composed of material A comprising ten test specimens of geometry B tested at a fixed rate in strain control to final fracture in ambient air).

NOTE 2—Tensile test specimens used for alignment verification should be equipped with a recommended eight separate longitudinal strain gages to determine bending contributions from both eccentric and angular misalignment of the grip heads. Although it is possible to use a minimum of six separate longitudinal strain gages for test specimens with circular cross sections, eight strain gages are recommended here for simplicity and consistency in describing the technique for both circular and rectangular cross sections. Dummy test specimens used for alignment verification should have the same geometry and dimensions of the actual test specimens, as well as similar mechanical properties (for example, elastic

Documents
Document Sharing Hub

Full document details: ASTM C1366-19

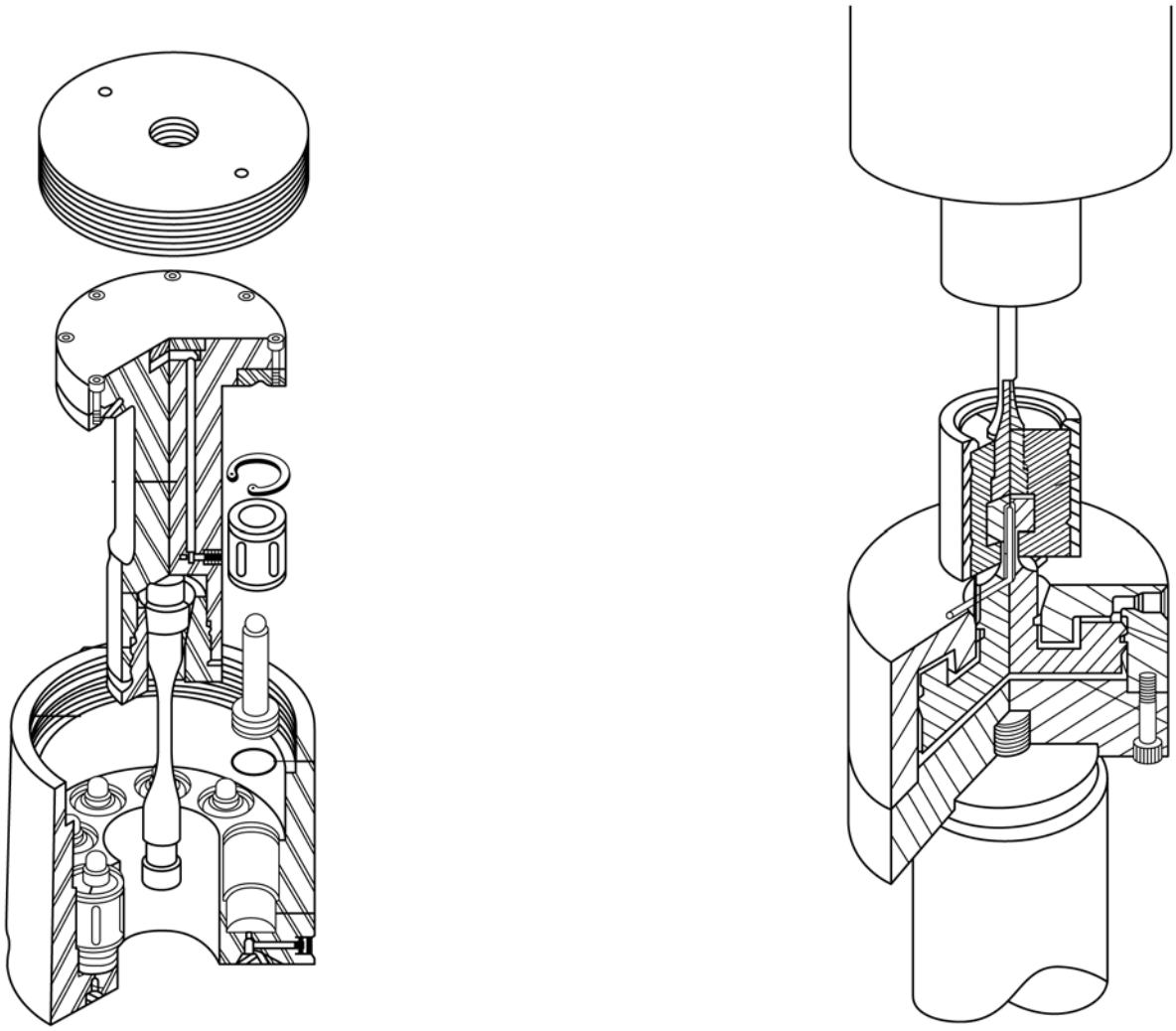

FIG. 7 Examples of Hydraulic, Self-Aligning, Non-Fixed Load Train Couplers (8, 9)

modulus, hardness, etc.) as the test material to ensure similar axial and bending stiffness characteristics as the actual test specimen and material.

6.3.2 *Fixed Load Train Couplers*—Fixed couplers may incorporate devices that require either a one-time, pre-test alignment adjustment of the load train which remains constant for all subsequent tests or an *in-situ*, pre-test alignment of the load train which is conducted separately for each test specimen and each test. Such devices (**10, 11**) usually employ angularity and concentricity adjusters to accommodate inherent load train misalignments. Regardless of which method is used, perform an alignment verification as discussed in 6.3.1.1.

6.3.3 *Non-Fixed Load Train Couplers*—Non-fixed couplers may incorporate devices that promote self-alignment of the load train during the movement of the crosshead or actuator. Generally, such devices rely upon freely moving linkages to eliminate applied moments as the load train components are loaded. Knife edges, universal joints, hydraulic couplers, or air bearings are examples (**5, 8-10, 12**) of such devices. Examples of two such devices are shown in Fig. 7. Although non-fixed load train couplers are intended to be self-aligning and thus eliminate the need to evaluate the bending in the test specimen for each test, verify the operation of the couplers and their effect on alignment as discussed in 6.3.1.1.

6.4 *Strain Measurement*—Although strain measurement techniques are not required in this test method, their use is recommended. Strain at elevated temperatures should be determined by means of a suitable extensometer. Appropriate strain measurements can be used to determine elastic constants in the linear region of the stress-strain curves and can serve to indicate underlying fracture mechanisms manifested as nonlinear stress-strain behavior.

6.4.1 Extensometers shall satisfy Practice E83, Class B-1 requirements. Calibrate extensometers periodically in accordance with Practice E83. For extensometers mechanically attached to or in contact with the test specimen, the attachment should be such so as to cause no mechanical damage to the test specimen surface. Extensometer contact probes must be chosen to be chemically compatible with the test material (for example, alumina extensometer extensions and an SiC test

AVA Documents
Document Sharing Hub

Full document details: ASTM C1366-19

specimen are incompatible). In addition, the weight of the extensometer should be supported so as not to introduce bending greater than that allowed in 6.5.

6.5 *Allowable Bending*—Analytical and empirical studies (**4**) have concluded that for negligible effects on the estimates of the strength distribution parameters (for example, Weibull modulus, $\hat{m}$, and characteristic strength, $\hat{\sigma}_\theta$), allowable percent bending as defined in Practice E1012 should not exceed five. These conclusions (**4**) assume that tensile strength fractures are due to fracture origins in the volume of the material, all tensile test specimens experienced the same level of bending, and that Weibull modulus, $\hat{m}$, was constant. Thus, the maximum allowable percent bending at fracture for test specimens tested under this test method shall not exceed five. Verify the testing system such that percent bending does not exceed five at a mean strain equal to either one half the anticipated strain at the onset of the cumulative fracture process (for example, matrix-cracking stress) or a strain of 0.0005 (500 micro strain), whichever is greater. Unless all test specimens are properly strain gaged and percent bending monitored until the onset of the cumulative fracture process, there will be no record of percent bending at the onset of fracture for each test specimen. Therefore, verify the alignment of the testing system. See Practice E1012 for discussions of alignment and Appendix X1 for suggested procedures specific to this test method.

6.6 *Heating Apparatus*—The apparatus for, and method of, heating the test specimens shall provide the temperature control necessary to satisfy the requirement of 9.3.2.

6.6.1 Heating can be by indirect electrical resistance (heating elements), direct induction, indirect induction through a susceptor, radiant lamp, or direct resistance with the test specimen in ambient air at atmospheric pressure unless other environments are specifically applied and reported.

NOTE 3—While direct resistance heating may be possible in some types of electrically conductive ceramics, it is not recommended in this test method since the potential exists for uneven heating or arcing, or both, at fracture.

6.7 *Temperature-Measuring Apparatus*—The method of temperature measurement shall be sufficiently sensitive and reliable to ensure that the temperature of the specimen is within the limits specified in 9.3.2.

6.7.1 For test temperatures less than 2000 K, make primary temperature measurements with noble-metal thermocouples in conjunction with potentiometers, millivoltmeters, or electronic temperature controllers or readout units, or both. Such measurements are subject to two types of error as discussed in MNL 12 (**12**). Firstly, thermocouple calibration and instrument measuring errors initially produce uncertainty as to the exact temperature. Secondly, both thermocouples and measuring instruments may be subject to variations over time. Common errors encountered in the use of thermocouples to measure temperatures include: calibration error, drift in calibration due to contamination or deterioration with use, lead-wire error, error arising from method of attachment to the test specimen, direct radiation of heat to the bead, heat conduction along thermocouple wires, etc.

6.7.1.1 Measure temperature with thermocouples of known calibration (calibrated according to Test Method E220). Calibrate representative thermocouples from each lot of wires used for making noble (for example, Pt or Rh/Pt) metal thermocouples. Except for relatively low temperatures of exposure, noble-metal thermocouples are eventually subject to error upon reuse, unless the depth of immersion and temperature gradients of the initial exposure are reproduced. Consequently, calibrate noble-metal thermocouples using representative thermocouples. Do not reuse degraded noble-metal thermocouples without proper treatment. This treatment includes clipping back the wire exposed to the hot zone, rewelding a thermocouple bead, and properly annealing the rewelded thermocouple bead and wire. Any reuse of noble-metal thermocouples (except after relatively low-temperature use) without this precautionary treatment shall be accompanied by recalibration data demonstrating that calibration of the temperature reading system was not unduly affected by the conditions of exposure.

6.7.1.2 Measurement of the drift in calibration of thermocouples during use is difficult. When drift is a problem during tests, devise a method to check the readings of the thermocouples on the test specimen during the test. For reliable calibration of thermocouples after use, reproduce the temperature gradient of the test furnace during the recalibration.

6.7.1.3 Thermocouples containing Pt are also subject to degradation in the presence of silicon and silicon-containing compounds. Platinum silicides may form, leading to several possible outcomes. One outcome is the embrittlement of the noble-metal thermocouple tips and their eventual degradation and breakage. Another outcome is the degradation of the silicon-containing material (for example, test specimen, furnace heating elements, or refractory furnace materials). In all cases, do not allow platinum-containing materials to contact silicon-containing materials. In particular, do not allow noble-metal thermocouples to contact silicon-based test materials (for example, SiC or Si_3N_4). In some cases (for example, when using SiC heating elements), it is advisable to use ceramic-shielded noble-metal thermocouples to avoid the reaction of the Pt-alloy thermocouples with the SiO gas generated by the volatilization of the SiO_2 protective layers of SiC heating elements.

6.7.1.4 Calibrate temperature-measuring, controlling, and recording instruments versus a secondary standard, such as precision potentiometer, optical pyrometer, or black-body thyristor. Check lead-wire error with the lead wires in place as they normally are used.

6.7.2 For test temperatures greater than 2000 K, less-common temperature measurement devices such as thermocouples of elevated-temperature, non-noble-metal alloys (for example, W-Re) or optical pyrometry may be used. Since widely recognized standards do not exist for these less-common devices, report the type of measurement device, its method of calibration, and its accuracy and precision.

6.8 *Data Acquisition*—At a minimum, obtain an autographic record of applied force versus time. Either analog chart recorders or digital data acquisition systems can be used for this purpose, although a digital record is recommended for ease of later data analysis. Ideally, an analog chart recorder or plotter should be used in conjunction with the digital data acquisition system to provide an immediate record of the test as

AVA Documents
Document Sharing Hub

Full document details: ASTM C1366-19

a supplement to the digital record. Recording devices shall be accurate to within ±1 % of the selected range for the testing system including readout unit, as specified in Practices E4, and should have a minimum data acquisition rate of 10 Hz, with a response of 50 Hz deemed more than sufficient.

6.8.1 Where strain or elongation of the gage section is also measured, these values should be recorded either similarly to the force or as independent variables of force. Crosshead displacement of the test machine may also be recorded but should not be used to define displacement or strain in the gage section.

6.8.2 At a minimum, record temperature as single points at the initiation and completion of the actual test. However, temperature can also be recorded similarly to force and strain, except the record can begin at the start of the heating of the furnace (including ramp-up to test temperature) and ending at the completion of the test.

6.9 *Dimension-Measuring Devices*—Micrometers and other devices used for measuring linear dimensions shall be accurate and precise to at least one half the smallest unit to which the individual dimension is measured. For the purposes of this test method, measure cross-sectional dimensions to within 0.02 mm using dimension-measuring devices with accuracies of 0.01 mm.

7. Hazards

7.1 **Precaution**—During the conduct of this test method, the possibility of flying fragments of broken test material is quite high. The brittle nature of advanced ceramics and the release of strain energy contribute to the potential release of uncontrolled fragments upon fracture. Means for containment and retention of these fragments for safety, as well as later fractographic reconstruction and analysis, is highly recommended.

8. Test Specimen

8.1 *Test Specimen Geometry:*

8.1.1 *General*—The geometry of a tensile test specimen is dependent on the ultimate use of the tensile strength data. For example, if the tensile strength of an as-fabricated component is required, the dimensions of the resulting tensile test specimen may reflect the thickness, width, and length restrictions of the component. If it is desired to evaluate the effects of inherent flaw distributions for a particular material manufactured from a particular processing route, then the size of the test specimen and resulting gage section will reflect the desired volume to be sampled. In addition, grip interfaces and load train couplers as discussed in Section 6 will influence the final design of the test specimen geometry.

8.1.1.1 Fig. 8 illustrates a range of tensile test specimen geometries which have been applied to testing advanced ceramics. Fig. 8 provides only a sampling of possible tensile test specimens for ceramics and by no means purports to represent all possible configurations past or present. The following sections discuss the more common, and thus proven, of these test specimen geometries, although any geometry is acceptable if it meets the gripping and bending requirements of this test method. If deviations from the recommended geometries are made, a stress analysis of the test specimen should be conducted to ensure that stress concentrations which could lead to undesired fractures outside the gage sections do not exist. Additionally, the success of an elevated-temperature tensile test will depend on the type of heating system, extent of test specimen heating, and test specimen geometry since these factors are all interrelated. For example, thermal gradients may introduce additional stress gradients in test specimens which may already exhibit stress gradients at ambient temperatures due to geometric transitions. Therefore, untried test configurations should be simultaneously analyzed for both loading-induced stress gradients and thermally induced temperature gradients to ascertain any adverse interactions.

NOTE 4—An example of such an analysis is shown in Fig. 9 for a monolithic silicon nitride cylindrical button-head tensile test specimen with water-cooled grip heads and a resistance-heated furnace heating only the center 50 mm of the test specimen. This example is a finite element analysis of a specific case for a specific material and test specimen test configuration. Thus, Fig. 9 is intended only as an illustrative example and should not be construed as being representative of all cases with similar test configurations.

8.1.2 *Cylindrical Tensile Test Specimens*—Cylindrical test specimens are generally fabricated from rods of material and offer the potential of testing the largest volume of the various tensile test specimens. In addition, the size of the test specimen lends itself to more readily evaluating the mechanical behavior of a material for engineering purposes. Disadvantages include the relatively large amount of material required for the starting billet, the large amount of material which must be removed during test specimen fabrication, and the need to fabricate the test specimen cylindrically, usually requiring numerically controlled grinding machines, all of which may add substantially to the total cost per test specimen. Gripped ends include various types of button-heads (**4, 8-11, 13**) as shown in Figs. X2.1-X2.3. In addition, straight-shank geometries have been successfully used (**2, 3**) as shown in Figs. X2.4 and X2.5. Important tolerances for the cylindrical tensile test specimens include concentricity and cylindricity that will vary depending on the exact configuration as shown in the appropriate test specimen drawings.

8.1.3 *Flat Tensile Test Specimens*—Flat test specimens are generally fabricated from plates or blocks of material and offer the potential for ease of material procurement, ease of fabrication, and subsequent lower cost per test specimen. Disadvantages include the relatively small volume of material tested and sensitivity of the test specimen to small dimensional tolerances or disturbances in the load train. Gripped ends include various types of shoulder-loaded shanks (**5, 6**) as shown in Figs. X2.6 and X2.7. In addition, pin-loaded gripped ends (**7**) have also been used successfully as shown in Fig. X2.8. Gage sections of flat tensile test specimens for strength measurements are sometimes cylindrical. While this type of gage section adds to the difficulty of fabrication and therefore cost of the flat tensile test specimen, it does not avoid the problem of fractures initiating at corners of non-cylindrical gage sections. Corner fractures may be initiated by stress concentrations due to the elastic constraint of the corners but are more generally initiated by damage (chipping, etc.) which can be treated by chamfering the corners similar to that recommended for rectangular cross section bars used for

AVA Documents
Document Sharing Hub

Full document details: ASTM C1366-19