This international standard was developed in accordance with internationally recognized principles on standardization established in the Decision on Principles for the Development of International Standards, Guides and Recommendations issued by the World Trade Organization Technical Barriers to Trade (TBT) Committee.

Designation: C1421 – 18

Standard Test Methods for Determination of Fracture Toughness of Advanced Ceramics at Ambient Temperature[1]

This standard is issued under the fixed designation C1421; the number immediately following the designation indicates the year of original adoption or, in the case of revision, the year of last revision. A number in parentheses indicates the year of last reapproval. A superscript epsilon (ε) indicates an editorial change since the last revision or reapproval.

1. Scope

1.1 These test methods cover the fracture toughness, K_{Ic}, determination of advanced ceramics at ambient temperature. The methods determine K_{Ipb} (precracked beam test specimen), K_{Isc} (surface crack in flexure), and K_{Ivb} (chevron-notched beam test specimen). The fracture toughness values are determined using beam test specimens with a sharp crack. The crack is either a straight-through crack formed via bridge flexure (pb), or a semi-elliptical surface crack formed via Knoop indentation (sc), or it is formed and propagated in a chevron notch (vb), as shown in Fig. 1.

NOTE 1—The terms bend(ing) and flexure are synonymous in these test methods.

1.2 These test methods are applicable to materials with either flat or with rising R-curves. Differences in test procedure and analysis may cause the values from each test method to be different. For many materials, such as the silicon nitride Standard Reference Material 2100, the three methods give identical results at room temperature in ambient air.

1.3 The fracture toughness values for a material can be functions of environment, test rate, and temperature. These test methods give fracture toughness values for specific conditions of environment, test rate, and temperature.

1.4 These test methods are intended primarily for use with advanced ceramics that are macroscopically homogeneous and microstructurally dense. Certain whisker- or particle-reinforced ceramics may also meet the macroscopic behavior assumptions. Single crystals may also be tested.

1.5 This standard begins with a main body that provides information on fracture toughness testing in general. It is followed by annexes and appendixes with specific information for the particular test methods.

Main Body	Section
Scope	1
Referenced Documents	2
Terminology (including definitions, orientation and symbols)	3
Summary of Test Methods	4
Significance and Use	5
Interferences	6
Apparatus	7
Test Specimen Configurations, Dimensions and Preparations	8
General Procedures	9
Report (including reporting tables)	10
Precision and Bias	11
Keywords	12
Annexes	
Test Fixture Geometries	Annex A1
Procedures and Special Requirements for Precracked Beam Method	Annex A2
Procedures and Special Requirements for Surface Crack in Flexure Method	Annex A3
Procedures and Special Requirements for Chevron Notch Flexure Method	Annex A4
Appendixes	
Precrack Characterization, Surface Crack in Flexure Method	Appendix X1
Complications in Interpreting Surface Crack in Flexure Precracks	Appendix X2
Alternative Precracking Procedure, Surface Crack in Flexure Method	Appendix X3
Chamfer Correction Factors, Surface Crack in Flexure Method Only	Appendix X4
Crack Orientation	Appendix X5

1.6 Values expressed in these test methods are in accordance with the International System of Units (SI) and IEEE/ASTM SI 10.

1.7 The values stated in SI units are to be regarded as standard. No other units of measurement are included in this standard.

1.8 *This standard does not purport to address all of the safety concerns, if any, associated with its use. It is the responsibility of the user of this standard to establish appropriate safety, health, and environmental practices and determine the applicability of regulatory limitations prior to use.*

1.9 *This international standard was developed in accordance with internationally recognized principles on standardization established in the Decision on Principles for the Development of International Standards, Guides and Recommendations issued by the World Trade Organization Technical Barriers to Trade (TBT) Committee.*

[1] These test methods are under the jurisdiction of ASTM Committee C28 on Advanced Ceramics and is the direct responsibility of Subcommittee C28.01 on Mechanical Properties and Performance.

Current edition approved Jan. 1, 2018. Published January 2018. Originally approved in 1999. Last previous edition approved in 2016 as C1421 – 16. DOI: 10.1520/C1421-18.

Copyright © ASTM International, 100 Barr Harbor Drive, PO Box C700, West Conshohocken, PA 19428-2959. United States

Documents
Document Sharing Hub
Full document details: ASTM C1421-18

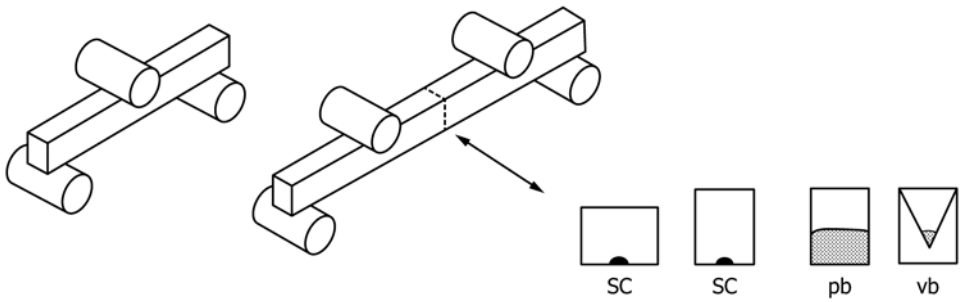

NOTE 1—The figures on the right show the test specimen cross sections and crack types. Four-point loading may be used with all three methods. Three-point may be used with the pb and vb specimens.

FIG. 1 The Three Test Methods

2. Referenced Documents

2.1 *ASTM Standards:*[2]

C1161 Test Method for Flexural Strength of Advanced Ceramics at Ambient Temperature

C1322 Practice for Fractography and Characterization of Fracture Origins in Advanced Ceramics

E4 Practices for Force Verification of Testing Machines

E112 Test Methods for Determining Average Grain Size

E177 Practice for Use of the Terms Precision and Bias in ASTM Test Methods

E337 Test Method for Measuring Humidity with a Psychrometer (the Measurement of Wet- and Dry-Bulb Temperatures)

E691 Practice for Conducting an Interlaboratory Study to Determine the Precision of a Test Method

E740/E740M Practice for Fracture Testing with Surface-Crack Tension Specimens

E1823 Terminology Relating to Fatigue and Fracture Testing

IEEE/ASTM SI 10 Standard for Use of the International System of Units (SI) (The Modern Metric System)

2.2 *Reference Material:*

NIST SRM 2100 Fracture Toughness of Ceramics[3]

3. Terminology

3.1 *Definitions:*

3.1.1 The terms described in Terminology E1823 are applicable to these test methods. Appropriate sources for each definition are provided after each definition in parentheses.

3.1.2 *fracture toughness*—a generic term for measures of resistance of extension of a crack. **(E1823)**

3.1.3 *R-curve*—a plot of crack-extension resistance as a function of stable crack extension.

3.1.4 *slow crack growth (SCG)*—subcritical crack growth (extension) which may result from, but is not restricted to, such mechanisms as environmentally assisted stress corrosion or diffusive crack growth.

3.1.5 *stress intensity factor, K* $[FL^{-3/2}]$—the magnitude of the ideal-crack-tip stress field (stress field singularity) for a particular mode in a homogeneous, linear-elastic body. **(E1823)**

3.2 *Definitions of Terms Specific to This Standard:*

3.2.1 *back-face strain*—the strain as measured with a strain gage mounted longitudinally on the compressive surface of the test specimen, opposite the crack or notch mouth (often this is the top surface of the test specimen as tested).

3.2.2 *crack depth, a [L]*—in surface-cracked test specimens, the normal distance from the cracked beam surface to the point of maximum penetration of crack front in the material.

3.2.3 *critical crack size [L]*—the crack size at which maximum force and catastrophic fracture occur in the precracked beam and the surface crack in flexure configurations. In the chevron-notched test specimen this is the crack size at which the stress intensity factor coefficient, Y^*, is at a minimum or equivalently, the crack size at which the maximum force would occur in a linear elastic, flat R-curve material.

3.2.4 *four-point-¼-point flexure*—flexure configuration where a beam test specimen is symmetrically loaded at two locations that are situated one-quarter of the overall span away from the outer two support bearings (see Fig. A1.1). **(C1161)**

3.2.5 *fracture toughness* K_{Ic} $[FL^{-3/2}]$—the critical stress intensity factor, Mode I, for fracture. It is a measure of the resistance to crack extension in brittle materials.

3.2.6 *fracture toughness* K_{Ipb} $[FL^{-3/2}]$—the measured stress intensity factor corresponding to the extension resistance of a straight-through crack formed via bridge flexure of a sawn notch or Vickers or Knoop indentation(s). The measurement is performed according to the operational procedure herein and satisfies all the validity requirements. (See Annex A2.)

3.2.7 *fracture toughness* K_{Isc} *or* K_{Isc}* $[FL^{-3/2}]$—the measured (K_{Isc}) or apparent (K_{Isc}*) stress intensity factor corresponding to the extension resistance of a semi-elliptical crack formed via Knoop indentation, for which the residual stress field due to indentation has been removed. The measurement is performed according to the operational procedure herein and satisfies all the validity requirements. (See Annex A3.)

3.2.8 *fracture toughness* K_{Ivb} $[FL^{-3/2}]$—the measured stress intensity factor corresponding to the extension resistance of a

[2] For referenced ASTM standards, visit the ASTM website, www.astm.org, or contact ASTM Customer Service at service@astm.org. For *Annual Book of ASTM Standards* volume information, refer to the standard's Document Summary page on the ASTM website.

[3] Available from National Institute of Standards and Technology (NIST), 100 Bureau Dr., Stop 1070, Gaithersburg, MD 20899-1070, http://www.nist.gov.

AVA Documents
Document Sharing Hub

Full document details: ASTM C1421-18

stably extending crack in a chevron-notched test specimen. The measurement is performed according to the operational procedure herein and satisfies all the validity requirements. (See Annex A4.)

3.2.9 *minimum stress-intensity factor coefficient,* Y^*_{min}—the minimum value of Y* determined from Y* as a function of dimensionless crack length, α = a/W.

3.2.10 *pop-in*—the sudden formation or extension of a crack without catastrophic fracture of the test specimen, apparent from a force drop in the applied force-displacement curve. Pop-in may be accompanied by an audible sound or other acoustic energy emission.

3.2.11 *precrack*—a crack that is intentionally introduced into the test specimen prior to testing the test specimen to fracture.

3.2.12 *stable crack extension*—controllable, time-independent, noncritical crack propagation.

3.2.12.1 *Discussion*—The mode of crack extension (stable or unstable) depends on the compliance of the test specimen and test fixture, the test specimen and crack geometries, R-curve behavior of the material, and susceptibility of the material to slow crack growth.

3.2.13 *three-point flexure*—flexure configuration where a beam test specimen is loaded at a location midway between two support bearings (see Fig. A1.2). **(C1161)**

3.2.14 *unstable crack extension*—uncontrollable, time-independent, critical crack propagation.

3.3 *Symbols:*

3.3.1 *a*—crack depth, crack length, crack size.

3.3.2 a_o—chevron tip dimension, vb method, Fig. A4.1.

3.3.3 a_1—chevron dimension, vb method, ($a_1 = (a_{11} + a_{12})/2$), Fig. A4.1.

3.3.4 a_{11}—chevron dimension, vb method, Fig. A4.1.

3.3.5 a_{12}—chevron dimension, vb method, Fig. A4.1.

3.3.6 $a_{0.25}$—crack length measured at 0.25*B*, pb method, Fig. A4.2.

3.3.7 $a_{0.50}$—crack length measured at 0.5*B*, pb method, Fig. A4.2.

3.3.8 $a_{0.75}$—crack length measured at 0.75*B*, pb method, Fig. A4.2.

3.3.9 *a/W*—normalized crack size.

3.3.10 *B*—the side-to-side dimension of the test specimen perpendicular to the crack length (depth) as shown in Fig. A2.4, Fig. A3.7, and Fig. A4.1.

3.3.11 *c*—crack half width, sc method, Fig. A3.7.

3.3.12 *d*—length of long diagonal for a Knoop indent, length of a diagonal for a Vickers indent, sc method.

3.3.13 *E*—elastic modulus.

3.3.14 *f(a/W)*—function of the ratio a/W, pb method, four-point flexure, Eq A2.6.

3.3.15 *F*—indent force, sc method.

3.3.16 F_C—chamfer correction factor, sc method.

3.3.17 *g(a/W)*—function of the ratio a/W, pb method, three-point flexure, Eq A2.2 and Eq A2.4.

3.3.18 *h*—depth of Knoop or Vickers indent, sc method, Eq A3.1.

3.3.19 $H_1(a/c, a/W)$—a polynomial in the stress intensity factor coefficient, for the precrack periphery where it intersects the test specimen surface, sc method, Eq A3.7.

3.3.20 $H_2(a/c, a/W)$—a polynomial in the stress intensity factor coefficient, for the deepest part of a surface crack, sc method, see Eq A3.5.

3.3.21 K_I—stress intensity factor, Mode I.

3.3.22 K_{Ic}—fracture toughness, critical stress intensity factor, Mode I.

3.3.23 K_{Ipb}—fracture toughness, pb method, Eq A2.1 and Eq A2.3.

3.3.24 K_{Isc}—fracture toughness, sc method, Eq A3.9.

3.3.25 K_{Ivb}—fracture toughness, vb method, Eq A4.1.

3.3.26 *L*—test specimen length, Fig. A2.1 and Fig. A3.1.

3.3.27 L_1, L_2—precracking fixture dimensions, pb method, Fig. A2.2.

3.3.28 *M(a/c, a/W)*—a polynomial in the stress intensity factor coefficient, sc method, see Eq A3.4.

3.3.29 *P*—force.

3.3.30 P_{max}—force maximum.

3.3.31 *Q(a/c)*—a polynomial function of the surface crack ellipticity, sc method, Eq A3.3.

3.3.32 *S(a/c, a/W)*—factor in the stress intensity factor coefficient, sc method, Eq A3.8.

3.3.33 S_o—outer span, three- or four-point test fixture. Figs. A1.1 and A1.2.

3.3.34 S_i—inner span, four-point test fixture, Fig. A1.1.

3.3.35 *t*—notch thickness, pb and vb method, Fig. A2.3 and Fig. A4.1.

3.3.36 *W*—the top-to-bottom dimension of the test specimen parallel to the crack length (depth) as shown in A2.4, A3.7, and A4.1.

3.3.37 *Y*—stress intensity factor coefficient.

3.3.38 *Y**—stress intensity factor coefficient for vb method.

3.3.39 Y_{max}—maximum stress intensity factor coefficient occurring around the periphery of an assumed semi-elliptical precrack, sc method.

3.3.40 Y^*_{min}—minimum stress intensity factor coefficient, vb method, Eq A4.2-A4.5.

3.3.41 Y_d—stress intensity factor coefficient at the deepest part of a surface crack, sc method, Eq A3.2.

3.3.42 Y_s—stress intensity factor coefficient at the intersection of the surface crack with the test specimen surface, sc method, Eq A3.6.

4. Summary of Test Methods

4.1 These methods involve application of force to a beam test specimen in three- or four-point flexure. The test specimen

AVA Documents
Document Sharing Hub

Full document details: ASTM C1421-18

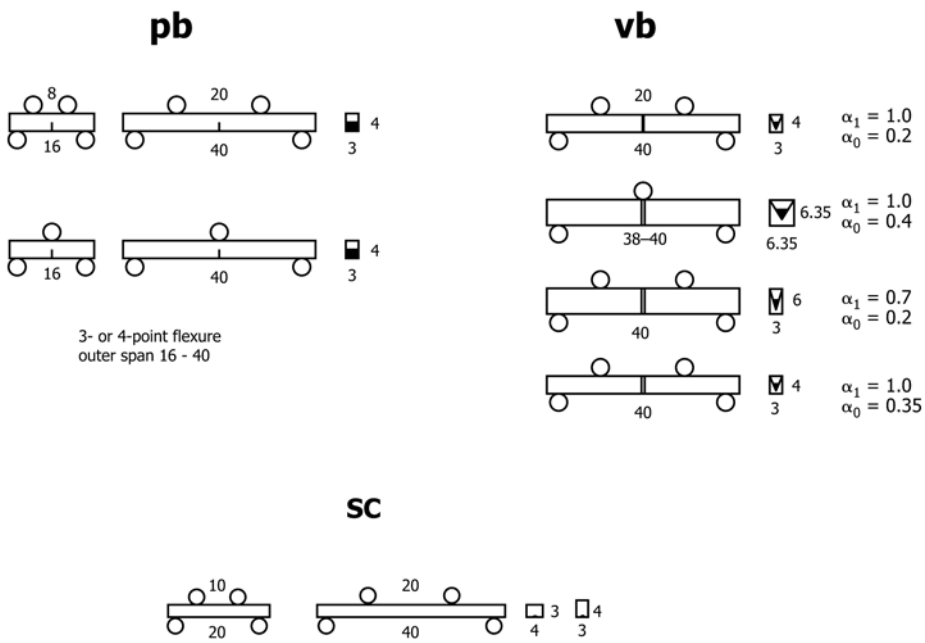

NOTE 1—Other three-point and four-point spans are permitted for the sc and pb methods.

FIG. 2 Primary Test Specimen and Fixture Configurations – General Schematic (All Dimensions in Millimetres)

is very similar to a common flexural strength test specimen. The test specimen either contains a sharp crack initially (pb, sc) or develops one during loading (vb). The equations for calculating the fracture toughness have been established on the basis of elastic stress analyses of the test specimen configurations. Specific sizes are given for the test specimens and the flexure fixtures. Some are shown in Fig. 2. Annex A2 – Annex A4 have more specific information and requirements for each method.

4.2 Each method has advantages and disadvantages that are listed in the following three paragraphs. These factors may be considered when choosing a test method. Nuances and important details for each method are covered in the specific annexes. Experience with a method increases the chances of obtaining successful outcomes. Some trial and error may be necessary with a new material or the first time a method is used, so it is wise to prepare extra test specimens. Background information concerning the basis for development of these test methods may be found in Refs (**1-6**).[4]

4.3 *Precracked Beam Method*—A straight-through precrack is created in a beam test specimen via the bridge-flexure technique. In this technique the precrack is extended from median cracks associated with one or more Vickers or Knoop indentations or a shallow saw notch. The fracture force of the precracked test specimen as a function of displacement or alternative (for example, time, back-face strain, or actuator displacement) in three- or four-point flexure is recorded for analysis. The fracture toughness, K_{Ipb}, is calculated from the fracture force, the test specimen size, and the measured precrack size. Advantages of this method are that it uses a classic fracture configuration and the precracks are large and not too difficult to measure. A disadvantage is that a special bridge precracking fixture is required to pop in a precrack. A well-designed and well-crafted bridge precracking fixture is needed to obtain good precracks. Another disadvantage is that large compression forces are needed to pop in the precrack. Another minor disadvantage is that once precracked, the test specimen must be handled with care since only a small force is necessary to break it. The precrack size must be measured. This is not difficult for most ceramics, but dye penetration techniques may be needed for some materials (for example, those with coarse grain microstructures) if the precrack does not stand out clearly.

4.4 *Surface Crack in Flexure Method*—A beam test specimen is indented with a Knoop indenter and polished (or hand ground), until the indent and associated residual stress field are removed. The fracture force to break the test specimen is determined in four-point flexure and the fracture toughness, K_{Isc}, is calculated from the fracture force, the test specimen size, and the measured precrack size. An advantage of this method is that the precracks are very small and may not be much larger than the natural strength-limiting flaws in the material, so the measured fracture toughness is appropriate for the size scale of the natural flaws. A disadvantage of this method is that fractographic techniques are required to measure the small precracks and some skill and fractographic equipment are needed. Another disadvantage is that this method will not work on very soft or porous ceramics since precracks will not form beneath the indenter that is used to pop in a precrack. The method also will not work in materials whose rough microstructure prevents the measurement of the precrack.

4.5 *Chevron-Notched Beam Method*—A chevron-notched beam is loaded in either three- or four-point flexure. Applied

[4] The boldface numbers given in parentheses refer to a list of references at the end of the text.

AVA Documents
Document Sharing Hub

Full document details: ASTM C1421-18

force versus displacement or an alternative (for example, time, back-face strain, or actuator displacement) is recorded in order to detect unstable fracture, since the test is invalid for unstable conditions. The fracture toughness, K_{Ivb}, is calculated from the maximum force applied to the test specimen after extension of the crack in a stable manner. The crack forms during the loading sequence. One major advantage of this method is that it is not necessary to measure the crack size. On the other hand, it is essential that stable crack extension be obtained during the test. This may be difficult for some ceramics with large elastic moduli and small fracture toughness values. The chevron notch must be machined very carefully as described in this method in order to facilitate stable crack extension and also to satisfy the requirements for a valid test result. A stiff machine/load train/fixture is often necessary to obtain stable crack extension.

NOTE 2—The fracture toughness of many ceramics varies as a function of the crack extension occurring up to the relevant maximum force. The actual crack extension to achieve the minimum stress intensity factor coefficient (Y^*_{min}) of the chevron notch configurations described in this method is 0.68 to 0.93 mm. This is likely to result in a fracture toughness value in the upper region of the R-curve.

5. Significance and Use

5.1 Fracture toughness, K_{Ic}, is a measure of the resistance to crack extension in a brittle material. These test methods may be used for material development, material comparison, quality assessment, and characterization.

5.2 The pb and the vb fracture toughness values provide information on the fracture resistance of advanced ceramics containing large sharp cracks, while the sc fracture toughness value provides this information for small cracks comparable in size to natural fracture sources. Cracks of different sizes may be used for the sc method. If the fracture toughness values vary as a function of the crack size it can be expected that K_{Isc} will differ from K_{Ipb} and K_{Ivb}. Table 1 tabulates advantages, disadvantages, and applicability of each method.

6. Interferences

6.1 *R-curve*—The microstructural features of advanced ceramics can cause rising R-curve behavior. For such materials the three test methods are expected to result in different fracture toughness values. These differences are due to the amount of crack extension prior to the relevant maximum test force, P_{max}, or they are due to the details of the precracking methods. For materials tested to date the fracture toughness values generally increase in the following order: K_{Isc}, K_{Ipb}, K_{Ivb} (7). However, there is insufficient experience to extend this statement to all materials. In the analysis of the vb method it is assumed that the material has a flat (no) R-curve. If significant R-curve behavior is suspected, then the sc method should be used for estimates of small-crack fracture toughness, whereas the vb test may be used for estimates of longer-crack fracture toughness. The pb fracture toughness may reflect either short- or long-crack length fracture toughness depending on the precracking conditions. For materials with a flat (no) R-curve, the values of K_{Ipb}, K_{Isc}, and K_{Ivb} are expected to be the same. NIST Standard Reference Material 2100 has a flat R-curve and $K_{Ipb} = K_{Isc} = K_{Ivb}$.

6.2 *Time-Dependent Phenomenon and Environmental Effects*—The values of K_{Ipb}, K_{Isc}, and K_{Ivb} for any material can be functions of test rate because of the effects of temperature or environment (1). Static forces applied for long durations can cause crack extension at K_I values less than those measured in these methods. The rate of, and level at which, such crack extension occurs can be changed by the presence of an aggressive environment, which is material specific. This time-dependent phenomenon is known as slow crack growth (SCG) in the ceramics community. SCG can be meaningful even for the relatively short times involved during testing and can lead to measured fracture toughness values less than the inherent resistance in the absence of environmental effects. This effect may be significant even at ambient conditions and can often be minimized or emphasized by selecting a fast or slow test rate, respectively, or by changing the environment. The recommended testing rates specified are an attempt to limit environmental effects (1).

6.3 *Stability*—This standard permits measurements of fracture toughness whereby the crack propagates unstably (sc and pb methods) or stably (sc, pb, vb). The stiffness of the test set-up can affect whether the crack grows stably or unstably. There is limited data that suggests a stably propagating crack may give a slightly lower fracture toughness value than an unstably propagating crack (1-3).

6.4 Processing details, service history, and environment may alter the fracture toughness of the material.

TABLE 1 Advantages, Disadvantages, and Applicability of Each Method

Method	Advantages	Disadvantages	Applicability
pb	- Classic fracture configuration - Large precracks - Cracks measurable	- Special bridge precracking fixture - Large forces for precracking - Low force to fracture after precrack - Post-fracture crack length measurement	- Large sharp cracks
sc	- Small precracks similar to natural cracks	- Fractographic techniques for precrack measurement - Skill and fractographic equipment required - Not appropriate for soft or porous materials - Not appropriate for coarse microstructure	- Small cracks comparable to natural cracks in dense materials
vb	- No need to measure crack length	- Stable crack extension required - May not work for stiff materials with low fracture toughness or materials not susceptible to slow crack growth - Precision machining of notch - Requires stiff load train	- Large sharp cracks - Flat R-curve material

AVA Documents
Document Sharing Hub

Full document details: ASTM C1421-18

7. Apparatus

7.1 *Testing*—Use a testing machine that has provisions for autographic recording of force applied to the test specimen versus either test specimen centerline deflection or time. The force accuracy of the testing machine shall be in accordance with Practices E4.

7.2 *Deflection Measurement*—Deflection measurements are optional, but if determined, measure test specimen deflection for the pb and vb close to the crack. The deflection gauge should be capable of resolving 1×10^{-3} mm (1 µm) while exerting a contacting force of less than 1 % of the maximum test force, P_{max}.

NOTE 3—If actuator displacement (stroke) is used to infer deflection of the test specimen for the purposes of assessing stability, caution is advised. Actuator displacement (stroke), although sometimes successfully used for this purpose (**8**), may not be as sensitive to changes of fracture behavior in the test specimen as measurements taken on the test specimen itself, such as back-face strain, load-point displacement, or displacement at the crack plane (**9**).

7.3 *Recording Equipment*—Provide a means for automatically recording the applied force-displacement or load-time test record, (such as an X-Y recorder). For digital data acquisition, sampling rates of 500 Hz or greater are recommended.

7.4 *Fixtures*—The pb and vb test specimens may be tested in either three-point or four-point fixtures. Annex A2 and Annex A3 give the recommended span sizes for these two methods, respectively. sc test specimens shall only be tested in four-point fixtures. Bend fixtures designed for flexural strength testing in accordance with Test Method C1161 are suitable, but this test method allows spans and configurations not in Test Method C1161. A bridge precracking fixture is also necessary for the pb method. It is described in Annex A2.

NOTE 4—Hereafter in this document the term four-point flexure will refer to the specific case of ¼-(that is, quarter) point flexure.

7.4.1 The four-point test fixture (see Fig. A1.1) for the pb, vb, or sc methods shall conform to the general fixture requirements of Test Method C1161. The recommended outer and inner spans are S_o = 40 mm and S_i = 20 mm, respectively, but this standard allows other span sizes provided that the minimum outer and inner spans shall be S_o = 20 mm and S_i = 10 mm, respectively. The outer rollers shall be free to roll outwards and the inner rollers shall be free to roll inwards. Place the rollers initially against their stops and hold them in position by low-tension springs or rubber bands or magnets. Because of the very low forces used to break precracked test specimens, very low-stiffness rubber bands or springs should be used. Roller pins shall have a hardness of HRC 40 or greater.

7.4.2 The length of each roller shall be at least three times the test specimen dimension, *B*. The roller diameter shall be 4.5 ± 0.5 mm. The rollers shall be parallel to each other within 0.015 mm over either the length of the roller or a length of 3B or greater.

7.4.3 If the test specimen parallelism requirements set forth in Fig. A2.1 and Fig. A3.1 are not met, use a fully articulating fixture as described in Test Method C1161.

7.4.4 The fixture shall be capable of maintaining the test specimen alignment to the tolerances specified in Annex A2 – Annex A4.

7.4.5 A three-point test fixture (see Fig. A1.2) may be used for the vb and pb methods. For the pb method, use an outer span, S_o, between 16 and 40 mm. Since W = 4 mm (the top to bottom dimension of the test specimen parallel to the crack length), then the fixture span to specimen size ratio is: $4 \leq \frac{S_o}{W} \leq 10$. For the vb method, W can range from 4 mm to 6.35 mm depending on the specimen type in Annex A4. Choose an outer span, S_o, such that $4 \leq \frac{S_o}{W} \leq 10$. The outer two rollers shall be free to roll outwards to minimize friction effects. The middle flexure roller shall be fixed. Alternatively, a rounded knife edge with diameter in accordance with 7.4.2 may be used in place of the middle roller.

NOTE 5—A stiff test system with displacement control and a stiff load train may be required to obtain stable crack extension for the vb test. Stable crack extension is essential for a valid vb test. A test system compliance of less than or equal to 4.43×10^{-5} m/N (including force transducer and fixtures) is adequate for most vb tests. Stable crack extension is not required for the pb test. See Refs (**8, 10, 11**).

7.5 *Dimension Measuring Devices*—Micrometers and other devices used for measuring test specimen dimensions shall be accurate and precise to 0.0025 mm or better. Flat, anvil-type micrometers with resolutions of 0.0025 or less shall be used for test specimen dimensions. Ball-tipped or sharp-anvil micrometers are not recommended as they may damage the test specimen surface by inducing localized cracking. Non-contacting (for example, optical comparator, light microscopy, etc.) measurements are recommended for crack, precrack or notch measurements, or all of these.

7.6 A conventional hardness testing machine is needed for the sc method in order to make an indentation-induced precrack. A conventional hardness machine may also be used for making a starter flaw for pb test specimens.

7.7 A bridge precracking fixture is needed for precracking pb specimens. See Annex A2.

8. Test Specimen Configurations, Dimensions, and Preparation

8.1 *Test Specimens*—Three precrack configurations are equally acceptable: a straight-through pb-crack, a semi-elliptical sc-crack, or a vb-chevron notch. These configurations are shown in Figs. 1 and 2. Details of the crack geometry, the specimen dimensions, and preparation requirements are given in Annex A2 for the pb, Annex A3 for the sc, and Annex A4 for the vb.

NOTE 6—A typical "plastic" (or deformation) zone, if such exists, is no greater than a fraction of a micrometer in most ceramics, thus the specified sizes are large enough to meet generally accepted plane strain requirements at the crack tip from a plasticity viewpoint.

9. General Procedures for Test Methods and Calculations

9.1 *Number of Tests*—Complete a minimum of five valid tests for each material and testing condition. It is prudent to prepare more than five test pieces. This will provide specimens for practice tests to determine the best precracking conditions and also provide specimens to make up for unsuccessful or

AVA Documents
Document Sharing Hub

Full document details: ASTM C1421-18

TABLE 2 Fracture Toughness Values of Sintered Silicon Carbide (Hexoloy SA) in MPa$\sqrt{m}$

NOTE 1—(n) = Number of test specimens tested.

NOTE 2—± = 1 standard deviation.

NOTE 3—? = quantity unknown.

Precracked Beam (pb)	Surface Crack in Flexure (sc)	Chevron Notch (vb)	Ref
2.54 ± 0.20 (3)	2.69 ± 0.08 (6)[A]	2.62 ± 0.06 (6) (A config.) 2.68 ± 0.03 (2) (B config.)	[A,B] using II-UW material, vintage 1985
2.58 ± 0.08 (4)	2.76 ± 0.08 (4)[A]	2.61 ± 0.05 (6) (A config.) 2.46 ± 0.03 (5) (C config.)	[A,B] using JAS material, vintage 1980
...	3.01 ± 0.35 (3)[C]	2.91 ± 0.31 (3) (B config.)	[D]

[A] Quinn, G. D. and Salem, J. A., "Effect of Lateral Cracks Upon Fracture Toughness Determined by the Surface Crack in Flexure Method," *Journal of the American Ceramic Society*, Vol 85, No. 4, 2002, pp. 873–880.
[B] Salem, J. A., Ghosn, L. J., Jenkins, M. G., and Quinn, G. D., "Stress Intensity Factor Coefficients for Chevron-Notched Flexure Specimens," *Ceramic Engineering and Science Proceedings*, Vol 20, No. 3, 1999, pp. 503–512.
[C] This data set may have been susceptible to overestimation of the sc fracture toughness due to the interference of vestigial lateral cracks.
[D] Ghosn, A., Jenkins, M. G., White, K. W., Kobayashi, A. S., and Bradt, R. C., "Elevated-Temperature Fracture Resistance of a Sintered α-Silicon Carbide," *Journal of the American Ceramic Society*, Vol 72, No. 2, 1989, pp. 242–247.

invalid tests. More specimens are needed if environment, testing rate, or precrack sizes will be varied.

9.2 *Valid Tests*—A valid individual test is one which meets all the general testing requirements in 9.2.1, and all the specific testing requirements for a valid test of the particular test method as specified in the appropriate annex.

9.2.1 A valid test shall meet the following general requirements.

9.2.1.1 Test machine shall have provisions for autographic recording of force versus deflection or time, and the test machine shall have an accuracy in accordance with Practices E4 (7.1).

9.2.1.2 Test fixtures shall comply with specifications of 7.4.

9.2.1.3 Dimension measuring devices shall comply with specifications of 7.5.

9.3 *Environmental Effects*—If susceptibility to environmental degradation, such as slow crack growth, is a concern, tests should be performed and reported at two different test rates, or in appropriately different environments. Testing in an inert environment (dry nitrogen, argon, or vacuum) can eliminate environmental effects. Susceptibility to slow crack growth can be assessed by testing at two different testing rates in an air or water environment. The rates should differ by two to three orders of magnitude (or greater), however, attainment of stable crack extension in vb may be difficult at high rates or in dry environments. Alternatively, the susceptibility can be assessed by choosing different environments such that the expected effect is small in one case (for example, inert dry nitrogen) and large in the other case (that is, water vapor). If an effect of the environment is detected, select the fracture toughness values measured at the greater test rates or in the inert environment. An example of the effect of environment on the fracture toughness of alumina is given in Refs (**9**) and (**1**).

9.4 *R-Curve*—When rising R-curve behavior is to be documented, two different test methods with different amounts of stable crack extension should be used and the results compared. The pb and sc tests typically have less stable crack extension than the vb test.

9.5 *Test Specimens and Fracture Experiments*—Specific test specimen measurements, procedures, and calculations are in Annex A2 – Annex A4.

9.6 *Test Rate*—Test the test specimen so that one of the test rates determined in 9.3 will result in a rate of increase in stress intensity factor between 0.1 and 2.75 MPa$\sqrt{m}$/s. Applied force, or displacement (actuator or stroke) rates, or both, corresponding to these stress intensity factor rates are discussed in the appropriate annex. Other test rates are permitted if environmental effects are suspected in accordance with 9.3.

9.7 *Humidity and Temperature*—Measure the temperature and humidity according to Test Method E337.

10. Report

10.1 For each test specimen, report the following information:

10.1.1 Test specimen identification.

10.1.2 Form of product tested, and materials processing information, if available.

10.1.3 Mean grain size, if available, by Test Methods E112 or other appropriate method.

10.1.4 Environment of test, relative humidity, temperature.

10.1.5 Test specimen dimensions: B and W.

10.1.5.1 For the pb test specimen crack length, a, and notch thickness, t, if applicable.

10.1.5.2 For the sc test specimen the crack dimensions a and $2c$.

10.1.5.3 For the vb test specimen the notch parameters, a_0 and a_{11} and a_{12} and the notch thickness, t.

10.1.6 Test fixture specifics.

10.1.6.1 Whether the test was in three- or four-point flexure.

10.1.6.2 Outer span, S_o, and inner span (if applicable), S_i.

10.1.7 Applied force or displacement rate.

AVA Documents
Document Sharing Hub

Full document details: ASTM C1421-18

10.1.8 Measured inclination of the crack plane as specified in the appropriate annex.

10.1.9 Relevant maximum test force, P_{max}, as specified in the appropriate annex.

10.1.10 Testing diagrams (for example, applied force versus displacement) as required.

10.1.11 Number of test specimens tested and the number of valid tests.

10.1.12 Fracture toughness values for each valid test with a statement confirming that all tests were indeed valid.

10.1.13 Additional information as required in the appropriate annex.

10.2 Mean and standard deviation of the fracture toughness for each test method used.

10.3 Crack plane and direction of crack propagation as appropriate (see Appendix X5).

11. Precision and Bias

11.1 *Precision*—The precision of a fracture toughness measurement is a function of the precision of the various measurements of linear dimensions of the test specimen and test fixtures, and the precision of the force measurement. The within-laboratory (repeatability) and between-laboratory (reproducibility) precisions of some of the fracture toughness procedures in this test method have been determined from inter-laboratory test programs (**12, 13**). More information about the precisions of the three test methods are in the Annex A2 – Annex A4.

11.2 *Bias*—Standard Reference Material (SRM) 2100 from the National Institute of Standards and Technology may be used to check for laboratory test result bias. The laboratory average value may be compared to the certified reference value of fracture toughness of 4.57 MPa√m ± 0.11 MPa√m (or 2.3 %) at a 95 % confidence level. SRM 2100 is a set of five silicon nitride beam test specimens. Identical results are obtained with the three test methods in this standard when used with SRM 2100.

11.3 *Variation in Results with Test Method for Other Materials*—As discussed in 1.4, 6.1, and 6.2, for some materials K_{Ipb}, K_{Isc}, and K_{Ivb} values may differ from each other (for example, (**14**)). Nevertheless, a comparison of test results obtained by the three different methods is instructive. Such comparisons are shown in Table 2. The experimental procedures used in the studies cited in Table 2 varied somewhat and were not always in accordance with this standard, although the data are presented here for illustrative purposes. Table 2 contains results for sintered silicon carbide, an advanced ceramic which is known to be insensitive to environmental effects in ambient laboratory conditions. This material is also known to have a fracture toughness independent of crack size (flat *R*-curve).

12. Keywords

12.1 advanced ceramics; chevron notch; fracture toughness; precracked beam; surface crack in flexure

ANNEXES

(Mandatory Information)

A1. SUGGESTED TEST FIXTURE SCHEMATICS

A1.1 See Figs. A1.1 and A1.2.

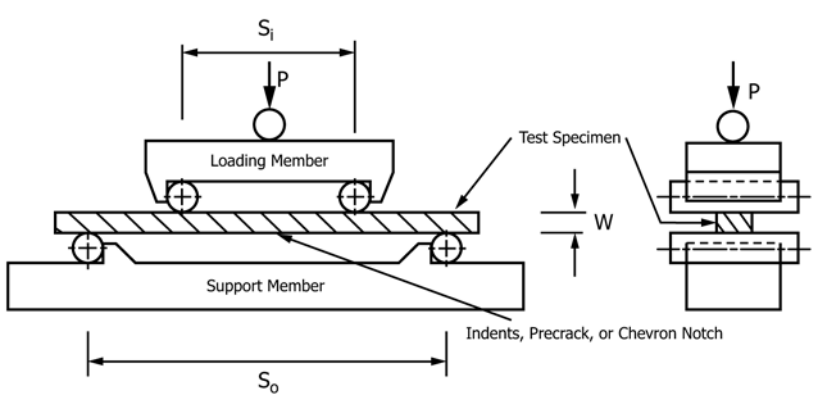

FIG. A1.1 Four-Point Test Fixture Schematic Which Illustrates the General Requirements for a Semi-Articulating Fixture

Documents
Document Sharing Hub

Full document details: ASTM C1421-18

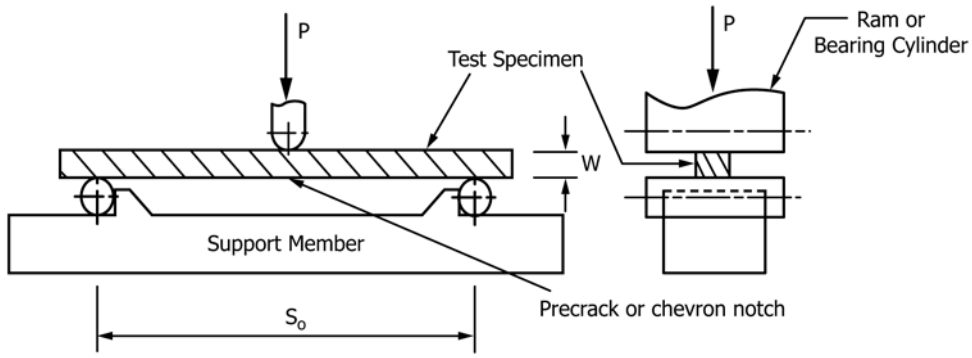

FIG. A1.2 Three-Point Test Fixture Schematic Which Illustrates the General Requirements of the Test Fixture

A2. PROCEDURES AND SPECIAL REQUIREMENTS FOR THE PRECRACKED BEAM METHOD

A2.1 Test Specimen

A2.1.1 *Test Specimen Size*—The test specimen shall be 3 by 4 mm in cross section with the tolerances shown in Fig. A2.1. The test specimen may or may not contain a saw-cut notch. For both four-point and three-point flexure tests the length shall be at least 20 mm but not more than 50 mm. Test specimens of larger cross section can be tested as long as the proportions given in Fig. A2.1 are maintained.

A2.1.2 *Test Specimen Preparation*—Test specimens prepared in accordance with the Procedure of Test Method C1161, test specimen Type B, are suitable as summarized in A2.1.2.1 – A2.1.2.3. Alternative procedures may be utilized provided that unwanted machining damage and residual stresses are minimized. Report any alternative test specimen preparation procedure in the test report.

A2.1.2.1 All grinding shall be done with an ample supply of appropriate filtered coolant to keep workpiece and wheel constantly flooded and particles flushed. Grinding shall be in at least two stages, ranging from coarse to fine rates of material removal. All machining shall be in the surface grinding mode parallel to the test specimen long axis. The stock removal rate shall not exceed 0.02 mm per pass to the last 0.06 mm per face.

A2.1.2.2 Perform finish grinding with a diamond-grit wheel of 320 grit or finer. No less than 0.06 mm per face shall be removed during the final finishing phase, and at a rate of not more than 0.002 mm per pass.

A2.1.2.3 The two end faces need not be precision machined. The four long edges shall be chamfered at 45° a distance of 0.12 ± 0.03 mm, or alternatively, they may be rounded with a radius of 0.15 ± 0.05 mm as shown in Fig. A2.1. Edge finishing shall be comparable to that applied to the test specimen surfaces. In particular, the direction of the machining shall be parallel to the test specimen long axis.

A2.1.2.4 The notch, if used, should be made in the 3-mm face, should be less than 0.10 mm in thickness, and should have a length of $0.12 \leq a/W \leq 0.30$.

A2.1.3 It is recommended that at least ten test specimens be prepared. This will provide test specimens for practice tests to determine the best precracking parameters. It will also provide

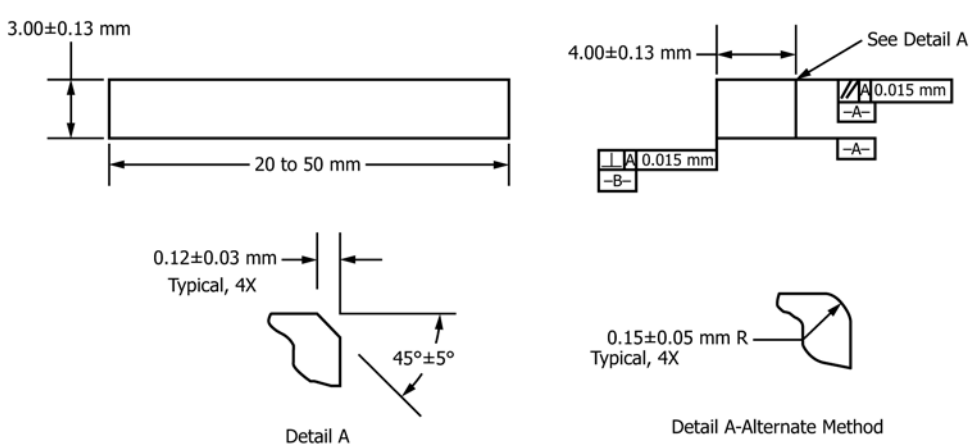

FIG. A2.1 Dimensions of Rectangular Beam

Documents
Document Sharing Hub
Full document details: ASTM C1421-18

make-up test specimens for unsuccessful or invalid tests so as to meet the requirements of 9.1 and 9.2.

A2.1.4 Measure the cross section dimensions B and W to within 0.002 mm near the middle of the test piece.

A2.2 Apparatus

A2.2.1 *General*—This fracture test is conducted in either three- or four-point flexure. A displacement measurement (or alternative) is required for fracture testing in order to detect signs of crack extension.

A2.2.2 *Bridge Precracking Fixture*—The configuration used for precracking is different from that used for the actual fracture test. A bridge compression fixture is used to create a precrack from an indentation crack or from a sawed notch. The fixture consists of a square support lower plate with a center groove (which is bridged by the test specimen) and a top pusher plate with a bonded pusher plate insert (for example, silicon nitride). The lengths of both plates (L_1 in Fig. A2.2) are equal to each other and are less than or equal to 18 mm. The surfaces that contact the test specimen are of a material with an elastic modulus greater than 300 GPa. The support plate can have several grooves (L_2 in Fig. A2.2) ranging from 2 to 6 mm in width. Alternatively, several parts, each with a different groove width, can be used. A fixture design is shown in Fig. A2.2. The support and pusher plates shall be parallel within 0.01 mm. Alternatively, a self-aligning fixture can be used.

A2.2.3 *Fracture Test Fixture*—The general principles of the four- and three-point test fixture are detailed in 7.4 and illustrated in Fig. A1.1 and Fig. A1.2, respectively. For three-point flexure, choose the outer support span such that $4 \leq \frac{S_o}{W} \leq 10$.

A2.2.3.1 For four-point flexure, the plane of the crack shall be located within 1.0 mm of the midpoint between the two inner rollers, S_i. Measure the inner and outer spans to within 0.1 mm. Align the midpoint of the two inner rollers relative to the midpoint of the two outer rollers to within 0.1 mm. Seat the displacement indicator (if used) close to the crack plane. Alternatively, use actuator (or crosshead) displacement (stroke), back-face strain, or a time sweep.

A2.2.3.2 For three-point flexure, measure the span within 0.5 % of S_o. Align the center of the middle roller so that its line of action shall pass midway between the two outer rollers within 0.1 mm. Seat the displacement indicator close to the crack plane if used. Alternatively, monitor actuator (or crosshead) displacement, back-face strain, or a time sweep.

NOTE A2.1—For short spans (for example, S_o = 16 mm) and S_o/W = 4.0 in three-point flexure, errors of up to 3 % in determining the critical mode I stress intensity factor may occur because of misalignment of the middle roller, misalignment of the support span, or angularity of the precrack at the extremes of the tolerances allowed (**16, 17**).

A2.2.3.3 This method permits either unstable or stable crack extension during the fracture test. When the critical stress intensity, K_{Ipb}, is reached, the crack propagates unstably through the test piece. This is acceptable and the normal way this test method is performed. If stable extension is desired, extra attention to the test setup is needed and very stiff test fixtures and load train may be necessary. The stability (that is, the tendency to obtain stable crack extension) of the test setup is affected not only by the test system compliance (see Note A2.2) but also by the test specimen dimensions, the S_o / W ratio, and the elastic modulus of the material (**8, 10**). The degree of stability can be detected easily with back-face strain.

NOTE A2.2—There is a limited amount of data indicating unstable tests may result in slightly greater fracture toughness values than those from tests with stable crack extension (**8, 10**). If stable crack extension cannot be obtained with four-point flexure, it may be possible to obtain stable crack extension by using a three-point flexure configuration in a stiff test setup. Nonlinearity of the initial part of the applied force-displacement curve (sometimes called "windup") is usually an artifact of the test setup and may not be indicative of material behavior. This type of nonlinearity does not contribute directly to instability unless such nonlinearity extends to the region of maximum force.

A2.3 Procedure

A2.3.1 *Preparation of Crack Starter*—Either the machined notch (Fig. A2.3a), or one or more Vickers or Knoop indentations (Fig. A2.3b), acts as the crack starter. For a test specimen without a notch, create a Vickers indentation in the middle of the surface of the 3-mm face (Fig. A2.3b). Additional indentations can be placed on both sides of the first indentation, aligned in the same plane and perpendicular to the longitudinal axis of the test specimen, as shown in Fig. A2.3b. One of the diagonals of each of the indentations shall be aligned parallel to the test specimen length. The indentation force shall not exceed 100 N. While an indentation crack is physically necessary for subsequent generation of a pop-in crack, cracks emanating from the corners of the indentation may or may not be visible depending on the characteristics and finish of the test material. Alternatively, a Knoop indentation may also be used as a crack starter, in which case the long axis of the indentation shall be perpendicular to the longitudinal axis of the test specimen. If, for a particular test material, a pop-in crack does

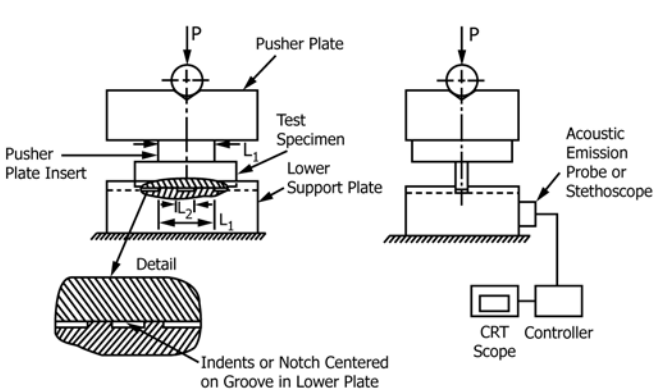

FIG. A2.2 Suggestion for Bridge Compression Fixture (15)

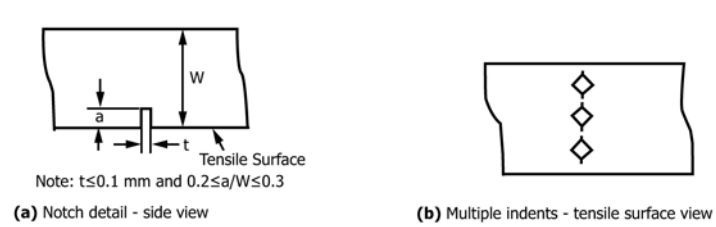

FIG. A2.3 Precracked Beam Precracking Arrangement

AVA Documents
Document Sharing Hub

Full document details: ASTM C1421-18