NOTICE: This standard has either been superseded and replaced by a new version or withdrawn.
Contact ASTM International (www.astm.org) for the latest information

Designation: C1459 – 04(Reapproved 2009)

Standard Specification for Performance of Non-Asbestos Fiber-Reinforced Cement Shake, Shingle, and Slate Roofing Systems[1]

This standard is issued under the fixed designation C1459; the number immediately following the designation indicates the year of original adoption or, in the case of revision, the year of last revision. A number in parentheses indicates the year of last reapproval. A superscript epsilon (ε) indicates an editorial change since the last revision or reapproval.

1. Scope

1.1 This specification covers the performance of non-asbestos, fiber-reinforced cement shake, shingle, and slate roofing systems that are of uniform or nonuniform thickness and texture.

1.2 This specification does not include details of product installation and workmanship. The manufacturer's installation instructions shall be referred to for details such as slope, interlayment, underlayment, sheathing requirements, exposure, fasteners, and repair or replacement instructions.

1.3 This specification does not address requirements for individual shake, shingle, and slate products, which are covered in Specification C1225 and C1530.

1.4 The tests contained in this specification are intended as qualification tests for a roofing system. Changes in product formulation, design, or manufacturing process beyond the ranges allowed in the manufacturer's quality control specifications, shall require subsequent system retesting or written concurrence by an independent testing agency that the changes in formulation, design, or manufacturing process will not be detrimental to system performance.

1.5 The values stated in inch-pound units are to be regarded as standard. The values given in parentheses are mathematical conversions to SI units that are provided for information only and are not considered standard.

1.6 *This standard does not purport to address all of the safety concerns, if any, associated with its use. It is the responsibility of the user of this standard to establish appropriate safety and health practices and determine the applicability of regulatory limitations prior to use.*

2. Referenced Documents

2.1 *ASTM Standards:*[2]

C1154 Terminology for Non-Asbestos Fiber-Reinforced Cement Products

C1185 Test Methods for Sampling and Testing Non-Asbestos Fiber-Cement Flat Sheet, Roofing and Siding Shingles, and Clapboards

C1225 Specification for Fiber-Cement Roofing Shingles, Shakes, and Slates

C1530 Specification for Non-Asbestos Fiber-Cement Roofing Shakes, Shingles, and Slates with Designed Varying Profiles and Thicknesses

E108 Test Methods for Fire Tests of Roof Coverings

3. Terminology

3.1 *Definitions*—Refer to Terminology C1154.

4. Significance and Use

4.1 This specification addresses key performance aspects of fiber-reinforced cement roofing systems. Aspects of performance such as aesthetics, hail resistance, wind resistance, wind-driven rain resistance, and items referenced in 1.2 are not addressed in this specification. Additional properties, which may influence system performance, are addressed in Specifications C1225 and C1530.

5. Performance Requirements

5.1 *Installed Strength Test*—The failure loads for the equilibrium and wet specimens shall be as required in Table 1 when tested in accordance with Section 6.

5.2 *Installed Weight Test*—Determine the weight in accordance with Section 7.

[1] This specification is under the jurisdiction of ASTM Committee C17 on Fiber-Reinforced Cement Productsand is the direct responsibility of Subcommittee C17.02 on Non-Asbestos Fiber Cement Products.

Current edition approved Nov. 1, 2009. Published March 2010. Originally approved in 2000. Last previous edition approved in 2004 as C1459 – 04. DOI: 10.1520/C1459-04R09.

[2] For referenced ASTM standards, visit the ASTM website, www.astm.org, or contact ASTM Customer Service at service@astm.org. For *Annual Book of ASTM Standards* volume information, refer to the standard's Document Summary page on the ASTM website.

Copyright © ASTM International, 100 Barr Harbor Drive, PO Box C700, West Conshohocken, PA 19428-2959. United States

Documents
Document Sharing Hub
Full document details: ASTM C1459-04(2009)

TABLE 1 Failure Loads

Product Type	Minimum Load, lbf (N)							
	Conditioned				Immersed			
	Average[A]		Individual[B]		Average[A]		Individual[B]	
	Initial	Ultimate	Initial	Ultimate	Initial	Ultimate	Initial	Ultimate
Flat shake, shingle, or slate	225 (1k)	300 (1.33k)	200 (0.89k)	250 (1.11k)	215 (0.96k)	250 (1.11k)	200 (0.89k)	225 (1k)

[A] Average value of five consecutive tests.
[B] Minimum individual test value.

5.3 *Accelerated Aging (Wet/Dry Cycling Test)*—There shall be no signs of additional damage or cracking when examined under 5× magnification, and the ratio of strength (*R*) shall be at least 0.90, when tested in accordance with Section 8.

5.4 *Accelerated Aging (Heat/Rain Test)*—Report any damage or structural alteration caused by the effect of stresses around the fasteners that attach the fiber-reinforced cement products when tested in accordance with the section on Heat/Rain Roof Structures in Test Methods C1185.

5.5 *Fire-Resistant Roof Test*—Where a specified level of installed roofing system fire resistance is required, testing shall be conducted in accordance with Test Methods E108 with the results reported in accordance with the provisions described within this specification.

6. Strength Test Method

6.1 *Significance and Use*—This test method simulates static flexural loads.

6.2 *Preparation of Test Specimens:*

6.2.1 *Test Specimen Construction* —For each specimen build a test deck of nominal 2 by 4-in. (50 by 100-mm) runners spaced a minimum of 16 in. (400 mm) on center. Install nominal 1 by 6-in. (25 by 150-mm) sheathing boards across the runners; provide 5½-in. (140-mm) spaces between the sheathing boards. Solid sheathing is permitted to replace the spaced sheathing boards when testing roofing products which are limited to installation over solid sheathing. Solid sheathing material shall be as specified in the manufacturer's published installation instructions. Roofing products (a minimum of 3 courses) are to be installed on the sheathing in a manner identical to field practices, with maximum weather exposure and side spacing (keyway). The tested assembly is permitted to include underlayment or interlayment, or both, fasteners, and starter course or cant strip. The maximum width of the test specimen is not limited.

6.2.2 *Conditioning:*

6.2.2.1 *Equilibrium*—Place fully constructed specimens in a controlled atmosphere of 73 ± 4°F (23 ± 2°C) and 50 ± 5 % relative humidity for 72 h in such a way that all faces are adequately ventilated. When the test specimens are removed from the controlled environment for testing, the testing shall be performed within 30 min.

6.2.2.2 *Wet*—Immerse fully constructed specimens in water at a temperature of 73 ± 4°F (23 ± 2°C) for not less than 48 h. Test the specimens within 30 min of removal from water.

6.3 *Test Procedure:*

6.3.1 Load test specimens at the mid-span of the roofing products between the spaced sheathing by a nominal 2 by 4-in. (50 by 100-mm) by 12-in. (300-mm) long wood loading beam placed with the nominal 4-in. width in contact with the specimen surface. Laterally, center the loading beam on the roof covering unit width or on the keyway between roofing products whichever, at the discretion of the testing laboratory, will yield lower values. Report tested locations. See Fig. 1.

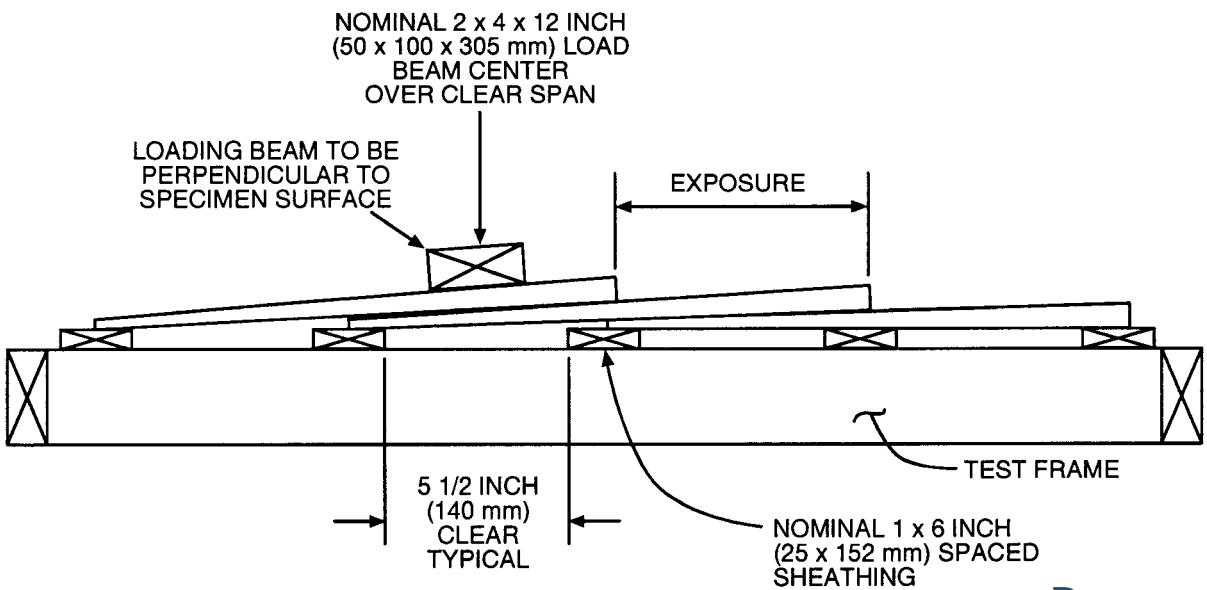

FIG. 1 Test Specimen

Documents
Document Sharing Hub

Full document details: ASTM C1459-04(2009)